Title 21A
ZONING

UPDATED: August 12, 2015

Chapters:

21A.01 ZONING CODE ADOPTION
21A.02 AUTHORITY, PURPOSE, INTERPRETATION AND ADMINISTRATION
21A.04 ZONES, MAPS AND DESIGNATIONS
21A.06 TECHNICAL TERMS AND LAND USE DEFINITIONS
21A.08 PERMITTED USES
21A.12 DEVELOPMENT STANDARDS - DENSITY AND DIMENSIONS
21A.14 DEVELOPMENT STANDARDS - DESIGN REQUIREMENTS
21A.16 DEVELOPMENT STANDARDS - LANDSCAPING AND WATER USE
21A.18 DEVELOPMENT STANDARDS - PARKING AND CIRCULATION
21A.20 DEVELOPMENT STANDARDS - SIGNS
21A.22 DEVELOPMENT STANDARDS - MINERAL EXTRACTION
21A.24 CRITICAL AREAS (Formerly Environmentally Sensitive Areas)
21A.25 SHORELINES
21A.26 DEVELOPMENT STANDARDS - COMMUNICATION FACILITIES
21A.27 DEVELOPMENT STANDARDS - MINOR COMMUNICATION FACILITIES
21A.28 DEVELOPMENT STANDARDS - ADEQUACY OF PUBLIC FACILITIES AND SERVICES
21A.30 DEVELOPMENT STANDARDS - ANIMALS, HOME OCCUPATION, HOME INDUSTRY
21A.32 GENERAL PROVISIONS - NONCONFORMANCE, TEMPORARY USES, AND RE-USE OF FACILITIES
21A.34 GENERAL PROVISIONS - RESIDENTIAL DENSITY INCENTIVES
21A.37 GENERAL PROVISIONS - TRANSFER OF DEVELOPMENT RIGHTS (TDR)
21A.38 GENERAL PROVISIONS - PROPERTY-SPECIFIC DEVELOPMENT STANDARDS/SPECIAL DISTRICT OVERLAYS
21A.39 GENERAL PROVISIONS - URBAN PLANNED DEVELOPMENTS
21A.40 APPLICATION REQUIREMENTS/NOTICE METHODS
21A.41 COMMERCIAL SITE DEVELOPMENT PERMITS
21A.42 REVIEW PROCEDURES/NOTICE REQUIREMENTS
21A.43 IMPACT FEES
21A.44 DECISION CRITERIA
21A.45 HOMELESS ENCAMPMENTS
21A.50 ENFORCEMENT
21A.55 DEMONSTRATION PROJECTS

21A.01 ZONING CODE ADOPTION

Sections:

21A.01.010 Adoption and transference.
21A.01.020 Zoning code adopted.
21A.01.025 Notification to Tribes.
21A.01.030 Application of the 1993 Zoning Code.
21A.01.040 Transition to new code.
21A.01.045 Relationship to certain adopted 1994 development regulations.
21A.01.050 Tree retention and landscaping (Ch. 21A.16) effective date.

21A.01.070 Area zoning conversion guidelines.
21A.01.090 Drawings.
21A.01.100 Periodic review.

21A.01.010 Adoption and transference. Pursuant to the requirement of King County Charter Section 880, there is adopted Title 21A of the "King County code" as compiled by the King County council. K.C.C. Chapter 21A.61A of the code is hereby transferred to Title 27. K.C.C. Sections 21A.61.060, .070 are hereby transferred to Title 20. (Ord. 10870 § 1, 1993).

21A.01.020 Zoning code adopted. Under the provisions of Article XI, Section 11 of the Washington State Constitution and Article 2, Section 220.20 of the King County Charter, the zoning code attached to Ordinance 10870, which is referred to hereinafter as the 1993 Zoning Code, is adopted and declared to be the zoning code for King County until amended, repealed or superseded, subject to the provisions of K.C.C. 21A.01.030. This code also is hereby enacted to be consistent with and implement the comprehensive plan in accordance with RCW 36.70A. This code shall be compiled in Title 21A. (Ord. 11621 § 1 (part), 1994: Ord. 10870 § 2, 1993).

21A.01.025 Notification to Tribes. The county recognizes that many actions undertaken pursuant to Title 21A, as amended, may impact treaty fishing rights of federally-recognized tribes. In order to honor and prevent interference with these treaty fishing rights and to provide for water quality and habitat preservation, the county shall provide notice to any federally-recognized tribes whose treaty fishing rights would be affected by an action undertaken pursuant to this title, including but not limited to: development of wetlands, stream and river banks, lakeshore habitat of water bodies, or development directly or indirectly affecting anadromous bearing water bodies, including the promulgation of plans, rules, regulations or ordinances implementing the provisions of this title, whether or not review of such actions is required under the State Environmental Policy Act (SEPA) RCW 43.21C. (Ord. 11621 § 1 (part), 1994).

21A.01.030 Application of the 1993 Zoning Code.

A. Except as provided in subsection C below, the 1993 Zoning Code shall apply to a specific property when, after the June 28, 1993, the zoning map with respect to such property is amended pursuant to:

1. an individual quasi-judicial zone reclassification;
2. countywide zoning conversion process set out in K.C.C. 21A.01.070; or
3. community planning area zoning proposals accompanying plan updates or amendment studies.

B. Any reclassification requests or proposals for application of area or countywide zoning initiated after June 28, 1993, shall use the new zone classifications adopted in the 1993 Zoning Code.

C. The provisions of King County Code Chapter 21A.24, together with the relevant provisions of Chapters 21A.06 and 21A.12, shall apply to all properties as of January 9, 1994. (Ord. 11621 § 2, 1994: 10870 § 3, 1993).

21A.01.040 Transition to new code.

A. Complete applications for conditional use permits, planned unit developments, binding site plans, right-of-way use permits, commercial site development permits, variances, unclassified use permits, or public agency and utility exceptions which were pending at the time Title 21A took effect shall continue to be processed under those applicable zoning regulations governing review prior to implementation of Title 21A;

except when a conditional use permit application has been submitted for a use that under Title 21A no longer requires a conditional use permit, that conditional use permit shall not be a requirement for the vested development proposal. Notwithstanding any contrary provisions in this title, where approved, these permits shall continue to establish allowable uses on the property until permit expiration. A variance to Title 21 standards which has been approved and has not expired shall be deemed to also vary like standards set forth in Title 21A relating to the same subject matter and development proposal. Planned unit development applications pending on October 1, 1994 shall be deemed to have vested at the time a complete application was filed. Nothing in this subsection is intended to restrict otherwise applicable vested applicant rights.

B. Except for the requirements of K.C.C. 21A.43, any lot created by subdivision or short subdivision for which a complete subdivision or short subdivision application was submitted prior to February 2, 1995, may be developed pursuant to the standards of Resolution 25789, as amended (former K.C.C. Title 21), including any applicable p-suffix conditions in adopted community plans and area zoning in effect on February 1, 1995 for a period of six years from the date of recording of the applicable final plat or short plat. (Ord. 12824 § 19, 1997: Ord. 11765 § 1, 1995: Ord. 11621 § 3, 1994: 10870 § 4, 1993).

21A.01.045 Relationship to certain adopted 1994 development regulations.

A. The King County Council makes the following findings of fact:

1. On December 19, 1994, the King County Council adopted Ordinance 11618, 11619, and 11620 amending Title 16 of the King County Code. The effective date of Ordinance 11618, 11619, and 11620 is January 9, 1995.

2. In drafting Ordinance 11618, 11619, and 11620, the references to the King County Zoning Code were amended to cite K.C.C. Title 21A, the new zoning code, and at the same time repeal references to K.C.C. Title 21, the old zoning code. This was done in anticipation that Proposed Ordinance 94-737, which adopts new zoning to implement the 1994 Comprehensive Plan and Title 21A, adopted would be on December 19, 1994 concurrent with Ordinance 11618, 11619, and 11620. Thus, K.C.C. Title 21A would become effective on the same date as Ordinance 11618, 11619, and 11620 [January 9, 1995].

3. However, on December 19, 1994 the King County Council deferred action on Proposed Ordinance 94-737 until January 3, 1995. On January 3, 1995 the action was again deferred to January 9, 1995. As a result of deferring action on Proposed Ordinance 94-737, K.C.C. 21A will not go into effect until some time after January 9, 1995.

4. The problem created by the actions described above is that Ordinance 11618, 11619, and 11620 will go into effect with references to zoning code requirements (K.C.C. Title 21A) that will not be in effect until the adoption and effective date [February 2, 1995] of Proposed Ordinance 94-737. Additionally, the references to the existing zoning code (K.C.C. Title 21) are repealed in Ordinance 11618, 11619, and 11620. As a result, development applications filed between January 9, 1995, and February 2, 1995, may vest to land use controls that will not include either existing Title 21 or the new Title 21A regulations. Such development may not provide protection for, and be harmful to, the public health, safety and welfare which Title 21 and 21A were adopted to address.

B. Ordinance 11618, 11619, and 11620 shall not take effect, or if in effect shall no longer be in effect, until King County adopts zoning to implement the 1994 King county Comprehensive Plan and to convert zoning to Title 21A (Proposed Ordinance 94-737) and such zoning becomes effective. Prior to January 9, 1995, provisions of law in effect prior to the adoption of January 9, 1995, shall remain in effect until Ordinance 11618, 11619, and 11620 is in effect under the provisions of this section. (Ord. 11652 § 1-2, 1995).

21A.01.050 Tree retention and landscaping effective date. Chapter 21A.16 (Tree Retention and Landscaping) shall be effective as part of the 1993 Zoning Code only if at the time of the adoption of the first area zoning map conversion a new landscaping chapter has not been adopted, in which case chapter 21A.16 will apply in that area until a revised chapter is adopted. (Ord. 10870 § 9, 1993).

21A.01.070 Area zoning conversion guidelines.

A. The council directs the department to prepare proposed new zoning maps applying the 1993 King County Zoning Code and transmit within ten months of June 28, 1993, for council review and adoption.

B. The department shall use the table set forth in subsection C and the guidelines of this section in preparing an ordinance or ordinances to convert each area zoning document to the 1993 Zoning Code, with modifications appropriate to be consistent with the comprehensive plan land use map and policies, so as to implement the comprehensive plan and convert old outright and potential zone designations to new ones in a consistent manner. The provisions of this section also shall apply to conversion of the resource lands area zoning adopted pursuant to K.C.C. 20.12.390.

C. Conversion table. The following conversion table and criteria contained therein shall be used by the department in converting the zoning maps adopted pursuant to Resolution 25789 to the 1993 Zoning Code:

RESOLUTION 25789 ZONING MAP SYMBOLS	1993 ZONING CODE MAP SYMBOLS	ADDITIONAL CRITERIA
F	F	In Forest Production or Rural Areas
FR	F or RA	Use zone most consistent with the comprehensive plan
A, A-10 A-35	A-10 A-35 or A-60	In Agricultural or Rural Areas Use zone most consistent with the comprehensive plan
Q-M	M	Designated Mining Sites
AR-2.5 AR-5 AR-10	RA-2.5 RA-5 RA-10 or RA-20	In Rural Areas Use zone most consistent with the comprehensive plan
GR-5, GR-2.5, G-5	UR RA	Only in designated urban areas In areas not designated urban
G	R-1 RA	Only in designated urban areas In areas not designated urban
SE, S-C	R-1	Only in designated urban areas or Rural Towns
SR/RS15000,SR/RS 9600	R-4	Only in designated urban areas or Rural Towns
SR7200, RS7200	R-6	Only in designated urban areas or Rural Towns
SR5000, RS5000	R-8	Only in designated urban areas or Rural Towns
RMHP	R-4 through R-48	Use zone closest to zoning on adjacent property or midrange if adjacent zones vary
RD3600, RT3600	R-12	
RM2400, RT2400	R-18	
RT, RM1800, RT1800	R-24	
RM900	O or R-48	Apply zoning closest to comprehensive plan land

		use designations
RM 900 P	O or R-48	According to P-suffix limitations allowing only office or residential uses
B-N, BR-N B-C, BR-C C-G M-L, M-P, M-H	NB or RB CB or RB RB I	For all business zones, use zone most consistent with the comprehensive plan designation and actual scale of business area

D. Unclassified Use Permit Mining Operations. In addition to the conversions set out in the table in subsection C, all sites legally operating pursuant to an unclassified use permit for mining operations shall be zoned M (Mineral).

E. Resolution of map conflicts. In cases of ambiguity or conflict between a community or comprehensive plan map designation and the zone classification applied under the old code, the department shall use the following guidelines and procedures in recommending new zones:

1. As a general rule, the outright or potential zoning designation applied shall be that which is consistent with the 1994 King County Comprehensive Plan; adopted community plans, where they do not conflict, may be used to provide additional guidance;

2. If the application of the guidelines in this subsection leads the department to propose applying an outright or potential zone classification from the 1993 Zoning Code that is not functionally equivalent to a classification from the old code as defined in the table in subsection C., the department shall notify the owner of the property proposed for reclassification no later than the council introduction date of the ordinance amending said property, and the property owner may request a change in the area zoning in a manner consistent with the procedures used for council review of a community plan and area zoning.

F. Area-wide P-suffix development conditions. The department shall review all area-wide P-suffix conditions applied through zoning adopted pursuant to Resolution 25789, and recommend legislation removing all such conditions which conflict with the comprehensive plan or have been replaced adequately by standards adopted in the 1993 zoning code. If P-suffix conditions implement policies in the comprehensive plan, then regulations shall be developed by the end of 1995 and the P-suffix conditions shall be removed. Any P-suffix conditions which implement policies in community plans which are not in conflict with the comprehensive plan but are not adequately addressed by this code shall be carried forward intact until they are evaluated for replacement by general code revisions in 1995.

G. Site-specific development conditions. Approval conditions for previous zone reclassifications, planned unit developments, unclassified permits, and P-suffix conditions applied to individual properties in land use actions pursuant to Resolution 25789, should be recommended for retention wherever they address conditions unique to a particular property and not addressed by the standards in the Zoning Code.

H. For area zoning documents being converted to the 1993 Zoning Code without amendments to their respective community plan maps and policies, only requests for zone changes which meet one of the following criteria shall be considered during either the department or council review process:

1. as provided in subsection E;

2. when an applicant can demonstrate that the department's proposal incorrectly implements an adopted comprehensive plan map designation or policy in converting existing zoning to a new zone classification; or

3. the site is the subject of an application for a Master Planned Development or Urban Planned Development, and conversion to the 1993 Zoning Code is requested as

part of such application. Rezoning of such sites during the conversion, area zoning otherwise shall be to Urban Reserve with the urban planned development overlay district as provided in Chapter 21A.38.

I. Requests which do not meet one of the criteria of subsection H shall be treated as quasi-judicial reclassification requests which must be formally applied for according to the process provided for such requests and shall be subject to the criteria in K.C.C. 20.24.190.

J. Requests for quasi-judicial reclassification that are consistent with the conversion table illustrated in subsection C and requests for quasi-judicial reclassification to the M zone, shall not be subject to the criteria in K.C.C. 20.24.190.

K. Bear Creek MPD's. The following transition provisions shall apply to the Master Plan Development applications in the Bear Creek Community Plan (BCCP).

1. An applicant may either continue to utilize the procedural provisions of the BCCP or may utilize the procedural provisions of K.C.C. 21A.39.

2. If an applicant utilizes the procedural provisions of K.C.C. 21A.39, the Pre-Development Applications previously submitted for the Blakely Ridge MPD and the Northridge MPD are deemed the equivalent of and accepted as complete applications for "UPD Permits" under Chapter 21A.39 of the 1993 zoning code.

3. The substantive provisions of the BCCP Area Zoning MPD P-Suffix conditions and conditions precedent to rezoning set forth in Section 1C of the BCCP Area Zoning (page 140) shall remain in effect for purposes of considering the UPD applications, under either the BCCP or K.C.C. 21A.39.

4. The applicants may elect either one base zone pursuant to K.C.C. 21A.39, or multiple zones pursuant to the Bear Creek Community Plan, applying the equivalent zone and potential zone designations of the 1993 zoning code.

5. The Novelty Hill Master Plan sites and urban designation adopted and delineated in the Bear Creek Community Plan and Bear Creek Area zoning shall be considered "UPD Special District Overlays" and "UPD boundary delineations" for purposes of applying K.C.C. 21A.38.020, .070B.1 and .070B.2 and K.C.C. 21A.39.020.(Ord. 11621 § 5, 1994: 11157 § 1, 1993: Ord. 10870 § 5, 1993).

21A.01.090 Drawings. The department is hereby authorized after June 7, 1993, to incorporate drawings as necessary for the purpose of illustrating concepts and regulatory standards contained in this title, provided that the adopted provisions of the code shall control over such drawings. (Ord. 10870 § 7, 1993).

21A.01.100 Periodic review. The department shall submit an annual written report to the council detailing issues relating to the implementation of the 1993 King County Zoning Code and recommending amendments to address those issues. (Ord. 10870 § 8, 1993).

21A.02 AUTHORITY, PURPOSE, INTERPRETATION AND ADMINISTRATION

Sections:

21A.02.010 Title.
21A.02.020 Authority to adopt code.
21A.02.030 Purpose.
21A.02.040 Conformity with this title required.
21A.02.050 Minimum requirements.
21A.02.055 Covenant of retention of common ownership for lots considered as a site.
21A.02.060 Interpretation: General.

21A.02.070 Interpretation: Standard industrial classification.
21A.02.080 Interpretation: Zoning maps.
21A.02.090 Administration and review authority.
21A.02.110 Classification of right-of-way.

21A.02.010 Title. This title shall be known as the King County Zoning Code. (Ord. 15051 § 1, 2004: Ord. 10870 § 11, 1993).

21A.02.020 Authority to adopt code. The King County Zoning Code is adopted by King County ordinance, pursuant to Article XI, Section 11 of the Washington State Constitution; and Article 2, Section 220.20 of the King County Charter. (Ord. 10870 § 12, 1993).

21A.02.030 Purpose. The general purposes of this title are:

A. To encourage land use decision making in accordance with the public interest and applicable laws of the State of Washington.

B. To protect the general public health, safety, and welfare;

C. To implement the King County Comprehensive Plan's policies and objectives through land use regulations;

D. To provide for the economic, social, and aesthetic advantages of orderly development through harmonious groupings of compatible and complementary land uses and the application of appropriate development standards;

E. To provide for adequate public facilities and services in conjunction with development; and

F. To promote general public safety by regulating development of lands containing physical hazards and to minimize the adverse environmental impacts of development. (Ord. 10870 § 13, 1993).

21A.02.040 Conformity with this title required.

A. No development, use or structure shall be established, substituted, expanded, constructed, altered, moved, maintained, or otherwise changed except in conformance with this title.

B. Creation of or changes to lot lines shall conform with the use provisions, dimensional and other standards, and procedures of this title and Title 19, Subdivisions.

C. All land uses and development authorized by this title shall comply with all other regulations and or requirements of this title as well as any other applicable local, state or federal law. Where a difference exists between this title and other county regulations, the more restrictive requirements shall apply.

D. Where more than one part of this title applies to the same aspect of a proposed use or development, the more restrictive requirement shall apply.

E. Temporary uses or activities, conducted during an emergency event, or training exercises conducted at emergency sites, designated pursuant to an emergency management plan, shall not be subject to the provisions of this title. (Ord. 16985 § 126, 2010: Ord. 11621 § 8, 1994: 10870 § 14, 1993).

21A.02.050 Minimum requirements. In interpretation and application, the requirements set forth in this title shall be considered the minimum requirements necessary to accomplish the purposes of this title. (Ord. 10870 § 15, 1993).

21A.02.055 Covenant of retention of common ownership for lots considered as a site.

If a development proposal depends on two or more lots to be considered as a site for purposes of complying with the provisions of this title or any other provision of the King County Code, the department may require the applicant to record a covenant to the benefit of the county that requires the retention of the lots under common ownership and control for the duration that the use is maintained on the site. (Ord. 17191 § 18, 2011).

21A.02.060 Interpretation: General.

A. In case of inconsistency or conflict, regulations, conditions or procedural requirements that are specific to an individual land use shall supersede regulations, conditions or procedural requirements of general application.

B. A land use includes the necessary structures to support the use unless specifically prohibited or the context clearly indicates otherwise.

C. In case of any ambiguity, difference of meaning, or implication between the text and any heading, caption, or illustration, the text and the permitted use tables in K.C.C. 21A.08 shall control. All applicable requirements shall govern a use whether or not they are cross-referenced in a text section or land use table.

D. Unless the context clearly indicates otherwise, words in the present tense shall include past and future tense, and words in the singular shall include the plural, or vice versa. Except for words and terms defined in this title, all words and terms used in this title shall have their customary meanings. (Ord. 10870 § 16, 1993).

21A.02.070 Interpretation: Standard industrial classification.

A. All references to the Standard Industrial Classification (SIC) are to the titles and descriptions found in the Standard Industrial Classification Manual, 1987 edition, prepared by United States Office of Management and Budget which is hereby adopted by reference. The (SIC) is used, with modifications to suit the purposes of this title, to list and define land uses authorized to be located in the various zones consistent with the comprehensive plan land use map.

B. The SIC categorizes each land use under a general two-digit major group number, or under a more specific three- or four-digit industry group or industry number. A use shown on a land use table with a two-digit number includes all uses listed in the SIC for that major group. A use shown with a three-digit or four-digit number includes only the uses listed in the SIC for that industry group or industry.

C. An asterisk (*) in the SIC number column of a land use table means that the SIC definition for the specific land use identified has been modified by this title. The definition may include one or more SIC subclassification numbers, or may define the use without reference to the SIC.

D. The Director shall determine whether a proposed land use not specifically listed in a land use table or specifically included within a SIC classification is allowed in a zone. The director's determination shall be based on whether or not permitting the proposed use in a particular zone is consistent with the purposes of this title and the zone's purpose as set forth in K.C.C. 21A.04, by considering the following factors:

1. The physical characteristics of the use and its supporting structures, including but not limited to scale, traffic and other impacts, and hours of operation;

2. Whether or not the use complements or is compatible with other uses permitted in the zone; and

3. The SIC classification, if any, assigned to the business or other entity that will carry on the primary activities of the proposed use. (Ord. 11621 § 7, 1994: 10870 § 17, 1993).

21A.02.080 Interpretation: Zoning maps. Where uncertainties exist as to the location of any zone boundaries, the following rules of interpretation, listed in priority order, shall apply:

A. Where boundaries are indicated as paralleling the approximate centerline of the street right-of-way, the zone shall extend to each adjacent boundary of the right-of-way. Non road-related uses by adjacent property owners, if allowed in the right-of-way, shall meet the same zoning requirements regulating the property owners lot;

B. Where boundaries are indicated as approximately following lot lines, the actual lot lines shall be considered the boundaries;

C. Where boundaries are indicated as following lines of ordinary high water, or government meander line, the lines shall be considered to be the actual boundaries. If these lines should change the boundaries shall be considered to move with them; and

D. If none of the rules of interpretation described in subparagraphs A. through C. apply, then the zoning boundary shall be determined by map scaling. (Ord. 10870 § 18, 1993).

21A.02.090 Administration and review authority.

A. The hearing examiner in accordance with K.C.C. chapter 20.24 may hold public hearings and make decisions and recommendations on reclassifications, subdivisions and other development proposals, and appeals.

B. The director may grant, condition or deny applications for variances, conditional use permits, renewals of permits for mineral extraction and processing, alteration exceptions and other development proposals, unless an appeal is filed and a public hearing is required under K.C.C. chapter 20.20, in which case this authority shall be exercised by the hearing examiner.

C. The department shall have authority to grant, condition or deny commercial and residential building permits, grading and clearing permits, and temporary use permits in accordance with the procedures in K.C.C. chapter 21A.42.

D. Except for other agencies with authority to implement specific provisions of this title, the department shall have the sole authority to issue official interpretations and adopt public rules to implement this title, in accordance with K.C.C. chapter 2.98. (Ord. 15051 § 2, 2004: Ord. 10870 § 19, 1993).

21A.02.110 Classification of right-of-way.

A. Except when such areas are specifically designated on the zoning map as being classified in one of the zones provided in this title, land contained in rights-of-way for streets or alleys, or railroads shall be considered unclassified.

B. Within street or alley rights-of-way, uses shall be limited to street purposes as defined by law.

C. Within railroad rights-of-way, allowed uses shall be limited to tracks, signals or other operating devices, movement of rolling stock, utility lines and equipment, and facilities accessory to and used directly for the delivery and distribution of services to abutting property.

D. Where such right-of-way is vacated, the vacated area shall have the zone classification of the adjoining property with which it is first merged. (Ord. 10870 § 21, 1993).

21A.04 ZONES, MAPS AND DESIGNATIONS

Sections:

21A.04.010 Zones and map designations established.
21A.04.020 Zone and map designation purpose.

21A.04.030 Agricultural zone.
21A.04.040 Forest zone.
21A.04.050 Mineral zone.
21A.04.060 Rural area zone.
21A.04.070 Urban reserve zone.
21A.04.080 Urban residential zone.
21A.04.090 Neighborhood business zone.
21A.04.100 Community business zone.
21A.04.110 Regional business zone.
21A.04.120 Office zone.
21A.04.130 Industrial zone.
21A.04.140 Map designation - regional use designation.
21A.04.150 Map designation - property-specific development or P-suffix standards.
21A.04.160 Map designation - special district overlay.
21A.04.170 Map designation - potential zone.
21A.04.180 Map designation - interim zoning.
21A.04.190 Zoning maps and boundaries.

21A.04.010 Zones and map designations established. In order to accomplish the purposes of this title the following zoning designations and zoning map symbols are established:

ZONING DESIGNATIONS	MAP SYMBOL
Agricultural	A (10 -or 35 acre minimum lot size)
Forest	F
Mineral	M
Rural Area	RA (2.5-acre, 5-acre, 10-acre or 20-acre minimum lot size)
Urban Reserve	UR
Urban Residential	R (base density in dwellings per acre)
Neighborhood Business	NB
Community Business	CB
Regional Business	RB
Office	O
Industrial	I
Regional Use	Case file number following zone's map symbol
Property-specific development standards	-P(suffix to zone's map symbol)
Special District Overlay	-SO(suffix to zone's map symbol)
Potential Zone	---------- | | | | ---------- (dashed box surrounding zone's map symbol)
Interim Zone	* (asterisk adjacent to zone's map symbol)

(Ord. 12929 § 1, 1997: Ord. 12596 § 1, 1997: Ord. 11621 § 9, 1994: Ord. 10870 § 22, 1993).

21A.04.020 Zone and map designation purpose. The purpose statements for each zone and map designation set forth in the following sections shall be used to guide the application of the zones and designations to all lands in unincorporated King County. The purpose statements also shall guide interpretation and application of land

use regulations within the zones and designations, and any changes to the range of permitted uses within each zone through amendments to this title. (Ord. 10870 § 23, 1993).

21A.04.030 Agricultural zone.

A. The purpose of the agricultural zone (A) is to preserve and protect irreplaceable and limited supplies of farmland well suited to agricultural uses by their location, geological formation and chemical and organic composition and to encourage environmentally sound agricultural production. These purposes are accomplished by:

1. Establishing residential density limits to retain lots sized for efficient farming;

2. Allowing for uses related to agricultural production and limiting nonagricultural uses to those compatible with farming, or requiring close proximity for the support of agriculture; and

3. Allowing for residential development primarily to house farm owners, on-site agricultural employees and their respective families.

B. Use of this zone is appropriate for lands within agricultural production districts designated by the Comprehensive Plan and for other farmlands deemed appropriate for long-term protection. (Ord. 10870 § 24, 1993).

21A.04.040 Forest zone.

A. The purpose of the forest zone (F) is to preserve the forest land base; to conserve and protect the long-term productivity of forest lands; and to restrict uses unrelated to or incompatible with forestry. These purposes are accomplished by:

1. Applying the F zone to large contiguous areas where a combination of site, soil and climatic characteristics make it possible to sustain timber growth and harvests over time;

2. Limiting residential, recreational, commercial and industrial uses to those uses that are compatible with forestry, to minimize the potential hazards of damage from fire, pollution and land use conflicts; and

3. Providing for compatible outdoor recreation uses and for conservation and protection of municipal watersheds and fish and wildlife habitats.

B. Use of this zone is appropriate for lands within forest production districts designated by the Comprehensive Plan. (Ord. 10870 § 25, 1993).

21A.04.050 Mineral zone.

A. The purpose of the mineral zone (M) is to provide for continued extraction and processing of mineral and soil resources in an environmentally responsible manner by:

1. Reserving known deposits of minerals and materials within areas as protection against premature development of the land for non-extractive purposes;

2. Providing neighboring properties with notice of prospective extracting and processing activities; and

3. Providing appropriate location and development standards for extraction and on-site processing to mitigate adverse impacts on the natural environment and on nearby properties.

B. Use of this zone is appropriate for known deposits of minerals and materials on sites that are of sufficient size to mitigate the impacts of operation and that are served or capable of being served at the time of development by adequate roads and other public services; and for sites containing mineral extracting and processing operations that were established in compliance with land use regulations in effect at the time the use was established. (Ord. 10870 § 26, 1993).

21A.04.060 Rural area zone.

A. The purpose of the rural zone (RA) is to provide for an area-wide long-term rural character and to minimize land use conflicts with nearby agricultural or forest production districts or mineral extraction sites. These purposes are accomplished by:

1. Limiting residential densities and permitted uses to those that are compatible with rural character and nearby resource production districts and sites and are able to be adequately supported by rural service levels;

2. Allowing small scale farming and forestry activities and tourism and recreation uses that can be supported by rural service levels and that are compatible with rural character;

3. Increasing required setbacks to minimize conflicts with adjacent agriculture, forest or mineral zones; and

4. Requiring tracts created through cluster development to be designated as permanent open space or as permanent resource use.

B. Use of this zone is appropriate in rural areas designated by the Comprehensive Plan as follows:

1. RA-2.5 in rural areas where the predominant lot pattern is below five acres in size for lots established prior to the adoption of the 1994 Comprehensive Plan;

2. RA-5 in rural areas where the predominant lot pattern is five acres or greater but less than ten acres in size and the area is generally environmentally unconstrained;

3. RA-10 in rural areas where the predominant lot pattern is ten acres or greater but less than twenty acres in size. RA-10 is also applied on land that is generally environmentally constrained, as defined by county, state or federal law, to protect critical habitat and regionally significant resource areas (RSRAs). The RA-10 zone is also applied to lands within one-quarter mile of a forest or agricultural production district or an approved long-term mineral extraction site. On Vashon-Maury Island RA-10 zoning shall be maintained on areas zoned RA-10 as of 1994 and on areas with a predominant lot size of ten acres or greater that are identified on the Areas Highly Susceptible to Groundwater Contamination map; and

4. RA-20 in Rural Forest Focus Districts designated by the King County Comprehensive Plan. (Ord. 14045 § 1, 2001: Ord. 11621 § 10, 1994: Ord. 10870 § 27, 1993).

21A.04.070 Urban reserve zone.

A. The purposes of the urban reserve zone (UR) are to phase growth and demand for urban services, and to reserve large tracts of land for possible future growth in portions of King County designated by the Comprehensive Plan for future urban growth while allowing reasonable interim uses of property; or to reflect designation by the Comprehensive Plan of a property or area as part of the urban growth area when a detailed plan for urban uses and densities has not been completed; or when the area has been designated as a site for a potential urban planned development or new fully contained community, as provided in K.C.C. 21A.38.070. These purposes are accomplished by:

1. Allowing for rural, agricultural and other low-density uses;

2. Allowing for limited residential growth, either contiguous to existing urban public facilities, or at a density supportable by existing rural public service levels; and

3. Requiring clustered residential developments where feasible, to prevent establishment of uses and lot patterns which may foreclose future alternatives and impede efficient later development at urban densities.

B. Use of this zone is appropriate in urban areas, rural towns or in rural city expansion areas designated by the Comprehensive Plan, when such areas do not have adequate public facilities and services or are not yet needed to accommodate planned

growth, do not yet have detailed land use plans for urban uses and densities, or are designated as sites for a potential urban planned development or new fully contained communities. (Ord. 13278 § 2, 1998: Ord. 12171 § 2, 1996: Ord. 11621 § 11, 1994: Ord. 10870 § 28, 1993).

21A.04.080 Urban residential zone.

A. The purpose of the urban residential zone (R) is to implement comprehensive plan goals and policies for housing quality, diversity and affordability, and to efficiently use urban residential land, public services and energy. These purposes are accomplished by:

1. Providing, in the R-1 through R-8 zones, for a mix of predominantly single detached dwelling units and other development types, with a variety of densities and sizes in locations appropriate for urban densities;

2. Providing, in the R-12 through R-48 zones, for a mix of predominantly apartment and townhouse dwelling units, mixed-use and other development types, with a variety of densities and sizes in locations appropriate for urban densities;

3. Allowing only those accessory and complementary nonresidential uses that are compatible with urban residential communities; and

4. Establishing density designations to facilitate advanced area-wide planning for public facilities and services, and to protect environmentally sensitive sites from over development.

B. Use of this zone is appropriate in urban areas, activity centers, or Rural Towns designated by the Comprehensive Plan as follows:

1. The R-1 zone on or adjacent to lands with area-wide environmental constraints where development is required to cluster away from sensitive areas, on lands designated urban separators or wildlife habitat network where development is required to cluster away from the axis of the corridor on critical aquifer recharge areas, and on Regionally and Locally Significant Resource Areas (RSRAs/LSRAs) or in well-established subdivisions of the same density, which are served at the time of development by public or private facilities and services adequate to support planned densities;

2. The R-4 through R-8 zones on urban lands that are predominantly environmentally unconstrained and are served at the time of development, by adequate public sewers, water supply, roads and other needed public facilities and services; and

3. The R-12 through R-48 zones next to Unincorporated Activity Centers, in Community or Neighborhood Business Centers, in mixed-use development, on small, scattered lots integrated into existing residential areas, or in Rural Towns, that are served at the time of development by adequate public sewers, water supply, roads and other needed public facilities and services. (Ord. 14045 § 2, 2001: Ord. 12822 § 5, 1997: Ord. 12596 § 2, 1997: Ord. 11621 § 12, 1994: Ord. 10870 § 29, 1993).

21A.04.090 Neighborhood business zone.

A. The purpose of the neighborhood business zone (NB) is to provide convenient daily retail and personal services for a limited service area and to minimize impacts of commercial activities on nearby properties and in urban areas on properties with the land use designation of commercial outside of center, to provide for limited residential development. These purposes are accomplished by:

1. Limiting nonresidential uses to those retail or personal services which can serve the everyday needs of a surrounding urban or rural residential area;

2. Allowing for mixed use (housing and retail/service) developments and for townhouse developments as a sole use on properties in the urban area with the land use designation of commercial outside of center; and

3. Excluding industrial and community/regional business-scaled uses.

B. Use of this zone is appropriate in urban neighborhood business centers, rural towns, or rural neighborhood centers designated by the comprehensive plan, on sites which are served at the time of development by adequate public sewers when located in urban areas or adequate on-site sewage disposal when located in rural areas, water supply, roads and other needed public facilities and services. (Ord. 12522 § 2, 1996: Ord. 11621 § 13, 1994: Ord. 10870 § 30, 1993).

21A.04.100 Community business zone.

A. The purpose of the community business zone (CB) is to provide convenience and comparison retail and personal services for local service areas which exceed the daily convenience needs of adjacent neighborhoods but which cannot be served conveniently by larger activity centers, and to provide retail and personal services in locations within activity centers that are not appropriate for extensive outdoor storage or auto related and industrial uses. These purposes are accomplished by:

1. Providing for limited small-scale offices as well as a wider range of the retail, professional, governmental and personal services than are found in neighborhood business areas;

2. Allowing for mixed use (housing and retail/service) developments; and

3. Excluding commercial uses with extensive outdoor storage or auto related and industrial uses.

B. Use of this zone is appropriate in urban and community centers or rural towns that are designated by the Comprehensive Plan and community plans and that are served at the time of development by adequate public sewers, water supply, roads and other needed public facilities and services. (Ord. 11621 § 14, 1994: Ord. 10870 § 31, 1993).

21A.04.110 Regional business zone.

A. The purpose of the regional business zone (RB) is to provide for the broadest mix of comparison retail, wholesale, service and recreation/cultural uses with compatible storage and fabrication uses, serving regional market areas and offering significant employment opportunities. These purposes are accomplished by:

1. Encouraging compact development that is supportive of transit and pedestrian travel, through higher nonresidential building heights and floor area ratios than those found in community centers;

2. Allowing for outdoor sales and storage, regional shopping areas and limited fabrication uses; and

3. Concentrating large scale commercial and office uses to facilitate the efficient provision of public facilities and services.

B. Use of this zone is appropriate in urban activity centers or rural towns that are designated by the Comprehensive Plan and community plans that are served at the time of development by adequate public sewers, water supply, roads and other needed public facilities and services. (Ord. 11621 § 15, 1994: Ord. 10870 § 32, 1993).

21A.04.120 Office zone.

A. The purpose of the office zone (O) is to provide for pedestrian and transit-oriented high-density employment uses together with limited complementary retail and urban density residential development in locations within activity centers where the full range of commercial activities is not desirable. These purposes are accomplished by:

1. Allowing for uses that will take advantage of pedestrian-oriented site and street improvement standards;

2. Providing for higher building heights and floor area ratios than those found in community centers;

3. Reducing the ratio of required parking to building floor area;

4. Allowing for on-site convenient daily retail and personal services for employees and residences; and

5. Excluding auto-oriented, outdoor or other retail sales and services which do not provide for the daily convenience needs of on-site and nearby employees or residents.

B. Use of this zone is appropriate in activity centers designated by the Comprehensive Plan and community plans which are served at the time of development by adequate public sewers, water supply, roads and other needed public facilities and services. (Ord. 10870 § 33, 1993).

21A.04.130 Industrial zone.

A. The purpose of the industrial zone (I) is to provide for the location and grouping of industrial enterprises and activities involving manufacturing, assembly, fabrication, processing, bulk handling and storage, research facilities, warehousing and heavy trucking. It is also a purpose of this zone to protect the industrial land base for industrial economic development and employment opportunities. These purposes are accomplished by:

1. Allowing for a wide range of industrial and manufacturing uses;

2. Establishing appropriate development standards and public review procedures for industrial activities with the greatest potential for adverse impacts; and

3. Limiting residential, institutional, commercial, office and other non-industrial uses to those necessary for the convenience of industrial activities.

B. Use of this zone is appropriate in urban activity centers or rural towns designated by the Comprehensive Plan and community plans which are served at the time of development by adequate public sewers, water supply, roads and other needed public facilities and services. (Ord. 11621 § 16, 1994: Ord. 10870 § 34, 1993).

21A.04.140 Map designation - regional use designation. The purpose of the regional use designation (case file number following underlying zone's map symbol) is to provide for individual review of certain proposed uses with unique characteristics and adverse impacts on neighboring properties. Regional uses are of a size and involve activities which require individual review to determine compatibility with surrounding uses. (Ord. 10870 § 35, 1993).

21A.04.150 Map designation - property-specific development or P-suffix standards. The purpose of the property-specific development standards designation (-P suffix to zone's map symbol) is to indicate that conditions beyond the minimum requirements of this title have been applied to development on the property, including but not limited to increased development standards, limits on permitted uses or special conditions of approval. Property-specific development standards are adopted in either a reclassification or area zoning ordinance and are shown in a geographic information system data layer for an individual property maintained by the department. Regardless of the form in which a property-specific development standard is adopted, the P-suffix shall be shown on the official zoning map maintained by the department and as a notation in a geographic information system data layer, which shall be updated as soon as possible after the effective date of the adopting ordinance adopting a P-suffix standard. (Ord. 17485 § 12, 2012: Ord. 12824 § 20, 1997: Ord. 11621 § 17 1994: Ord. 10870 § 36, 1993).

21A.04.160 Map designation - special district overlay. The purpose of the special district overlay designation (-SO suffix to zone's map symbol) is to carry out Comprehensive Plan and community, subarea or neighborhood plan policies that identify special opportunities for achieving public benefits by allowing or requiring alternative uses and development standards that differ from the general provisions of this title. Special district overlays are generally applied to a group of individual properties or entire community, subarea or neighborhood planning areas and are designated primarily through the area zoning process. Regardless of the form in which a special district overlay is adopted, the -SO suffix shall be shown on the official zoning map maintained by the department and as a notation in a geographic information system data layer, which shall be updated as soon as possible after the effective date of the adopting ordinance adopting an overlay. (Ord. 17485 § 13, 2012: Ord. 12823 § 1, 1997: Ord. 11621 § 18, 1994: Ord. 10870 § 37, 1993).

21A.04.170 Map designation - potential zone.

A. The purpose of the potential zone (dashed box surrounding zone's map symbol) is to designate properties potentially suitable for future changes in land uses or densities once additional infrastructure, project phasing or site-specific public review has been accomplished. Potential zones are designated by either area zoning or individual zone reclassification. Area zoning may designate more than one potential zone on a single property if the community plan designates alternative uses for the site. Potential zones are actualized pursuant to K.C.C. 20.24.

B. The use of a potential zone designation is appropriate to:

1. Phase development based on availability of public facilities and services or infrastructure improvements (e.g. roads, utilities, schools);

2. Prevent existing development from becoming a nonconforming use in areas that are in transition from previous uses;

3. Allow for future residential density increases consistent with a community plan; and

4. Provide for public review of proposed uses on sites where some permitted uses in a zone designation may not be appropriate. (Ord. 10870 § 38, 1993).

21A.04.180 Map designation - interim zoning. The purpose of the interim zone designation (* suffix to zone's map symbol) is to identify areas where zoning has been applied for a limited period of time in order to preserve the county's planning options and to protect the public safety, health and general welfare during an emergency or pending a community, comprehensive or functional plan amendment process. Any of the zones set forth in this chapter, with or without -P suffix conditions, may be applied as interim zones. The adopting ordinance shall state the reasons for the interim zoning and provide for its expiration upon a certain date or the adoption of a new plan, plan amendment or area zoning. (Ord. 10870 § 39, 1993).

21A.04.190 Zoning maps and boundaries.

A. The location and boundaries of the zones defined by this chapter shall be shown and delineated on zoning maps adopted by ordinance.

B. Changes in the boundaries of the zones, including application or amendment of interim zoning, shall be made by ordinance adopting or amending a zoning map.

C. Zoning maps are available for public review at the department of permitting and environmental review permit center during business hours. (Ord. 17420 § 96, 2012: Ord. 10870 § 40, 1993).

21A.06 TECHNICAL TERMS AND LAND USE DEFINITIONS

Sections:

21A.06.005 Scope of chapter.
21A.06.007 Abandoned vehicle.
21A.06.010 Accessory living quarters.
21A.06.013 Accessory use.
21A.06.015 Accessory use, commercial/industrial.
21A.06.020 Accessory use, residential.
21A.06.025 Accessory uses prohibited if not expressly permitted.
21A.06.026 Active recreation space.
21A.06.027 Adjustment factor.
21A.06.035 Adult entertainment business.
21A.06.037 Agricultural drainage.
21A.06.040 Agricultural product sales.
21A.06.042 Agriculture training facility.
21A.06.043 Agricultural waterway.
21A.06.045 Aircraft, ship and boat manufacturing.
21A.06.050 Airport/heliport.
21A.06.055 Alley.
21A.06.056 Alteration.
21A.06.057 Alternative water sources.
21A.06.060 Amusement arcades.
21A.06.065 Animal, small.
21A.06.067 Antenna.
21A.06.070 Applicant.
21A.06.072 Application rate.
21A.06.072B Aquaculture.
21A.06.072B Aquaculture.
21A.06.072C Aquatic area.
21A.06.073 Artist studio.
21A.06.075 Auction house.
21A.06.078 Bank stabilization.
21A.06.080 Base flood.
21A.06.085 Base flood elevation.
21A.06.087 Basement.
21A.06.090 Bed and breakfast guesthouse.
21A.06.095 Beehive.
21A.06.097 Berm.
21A.06.098 Best management practice.
21A.06.100 Billboard.
21A.06.105 Billboard face.
21A.06.108 Bioengineering.
21A.06.113 Bog.
21A.06.115 Book, stationery, video and art supply store.
21A.06.118 Breakwater.
21A.06.120 Broadleaf tree.
21A.06.122 Buffer.
21A.06.125 Building.
21A.06.135 Building envelope.
21A.06.140 Building facade.
21A.06.145 Building materials and hardware store.

21A.06.150 Bulk gas storage tanks.
21A.06.155 Bulk retail.
21A.06.156 Bulkhead.
21A.06.158 Camp, agriculture-related special needs.
21A.06.160 Campground.
21A.06.162 Camps, recreational and retreat.
21A.06.165 Capacity, school.
21A.06.170 Capital facilities plan, school.
21A.06.172 Catastrophic collapse.
21A.06.175 Cattery, commercial.
21A.06.177 Cattery, hobby.
21A.06.180 Cemetery, columbarium or mausoleum.
21A.06.181 Channel.
21A.06.181C Channel edge.
21A.06.181E Channel migration hazard area, moderate.
21A.06.181G Channel migration hazard area, severe.
21A.06.182 Channel migration zone.
21A.06.185 Church, synagogue or temple.
21A.06.190 Classrooms, school.
21A.06.195 Clearing.
21A.06.196 Clustering.
21A.06.197 Coal mine by-product stockpiles.
21A.06.200 Coal mine hazard area.
21A.06.205 Cogeneration.
21A.06.210 Communication facility, major.
21A.06.215 Communication facility, minor.
21A.06.217 Community identification sign.
21A.06.220 Community residential facility ("CRF").
21A.06.223 Commuter parking lot.
21A.06.225 Compensatory storage.
21A.06.230 Conditional use permit.
21A.06.235 Conference center.
21A.06.240 Confinement area.
21A.06.245 Consolidation.
21A.06.247 Construction and trades.
21A.06.250 Construction cost per student, school.
21A.06.252 Conversion factor.
21A.06.253 County fairground facility.
21A.06.253C Critical aquifer recharge area.
21A.06.254 Critical area.
21A.06.255 Critical drainage area.
21A.06.260 Critical facility.
21A.06.261 Critical saltwater habitat.
21A.06.262 Daily care.
21A.06.265 Daycare.
21A.06.270 Deciduous.
21A.06.275 Development rights, transfer of ("TDR").
21A.06.280 Department.
21A.06.285 Department and variety store.
21A.06.290 Destination resort.
21A.06.295 Developer or applicant.
21A.06.300 Development activity.

21A.06.305 Development agreement.
21A.06.310 Development proposal.
21A.06.315 Development proposal site.
21A.06.318 Digester, agricultural anaerobic.
21A.06.320 Direct traffic impact.
21A.06.325 Director.
21A.06.326 Ditch.
21A.06.328 Dog training facility.
21A.06.330 Dormitory.
21A.06.331 Draft flood boundary work map.
21A.06.332 Drainage basin.
21A.06.332C Drainage facility.
21A.06.333 Drainage subbasin.
21A.06.333A Dredging.
21A.06.334 Drift cell.
21A.06.335 Drop box facility.
21A.06.340 Drug store.
21A.06.345 Dwelling unit.
21A.06.350 Dwelling unit, accessory.
21A.06.355 Dwelling unit, apartment.
21A.06.358 Dwelling unit, cottage housing.
21A.06.365 Dwelling unit, single detached.
21A.06.370 Dwelling unit, townhouse.
21A.06.375 Earth station.
21A.06.378 Ecosystem.
21A.06.380 Effective radiated power.
21A.06.390 Electrical substation.
21A.06.392 Emergency.
21A.06.393 Employee, agricultural.
21A.06.395 Energy resource recovery facility.
21A.06.398 Engineer, civil, geotechnical and structural.
21A.06.400 Enhancement.
21A.06.401 Environment, shoreline.
21A.06.402 Environmental education project.
21A.06.405 Equipment, heavy.
21A.06.410 Erosion.
21A.06.415 Erosion hazard area.
21A.06.420 Evergreen.
21A.06.425 Examiner.
21A.06.427 Expansion.
21A.06.430 Fabric shop.
21A.06.435 Facilities standard.
21A.06.440 Factory-built commercial building.
21A.06.445 Fairground.
21A.06.450 Family.
21A.06.451 Farm field access drive.
21A.06.451A Farm pad.
21A.06.451M Farmers market.
21A.06.452 Feasible.
21A.06.453 Federal Emergency Management Agency.
21A.06.454 FEMA.
21A.06.455 Federal Emergency Management Agency ("FEMA") floodway.

21A.06.460 Feed store.
21A.06.464 Fen.
21A.06.465 Fence.
21A.06.467 Financial guarantee.
21A.06.469 Float.
21A.06.470 Flood fringe, zero-rise.
21A.06.475 Flood hazard areas.
21A.06.476 Flood hazard boundary map.
21A.06.478 Flood hazard data.
21A.06.480 Flood Insurance Rate Map.
21A.06.485 Flood Insurance Study for King County.
21A.06.490 Flood protection elevation.
21A.06.492 Flood protection facility.
21A.06.495 Floodplain.
21A.06.497 Floodplain development.
21A.06.500 Floodproofing, dry.
21A.06.505 Floodway, zero-rise.
21A.06.510 Florist shop.
21A.06.512 Footprint.
21A.06.513 Footprint, development
21A.06.515 Forest land.
21A.06.517 Forest management activity.
21A.06.520 Forest practice.
21A.06.525 Forest product sales.
21A.06.530 Forest research.
21A.06.531 Forestry.
21A.06.533 Fully contained community (FCC).
21A.06.535 Furniture and home furnishings store.
21A.06.540 General business service.
21A.06.545 Geologist.
21A.06.555 Golf course facility.
21A.06.558 Grade.
21A.06.560 Grade span.
21A.06.565 Grading.
21A.06.570 Grazing area.
21A.06.573 Groin.
21A.06.575 Groundcover.
21A.06.577 Habitat.
21A.06.578 Habitat, fish.
21A.06.580 Hazardous household substance.
21A.06.582 Hazardous liquid and gas transmission pipeline.
21A.06.585 Hazardous substance.
21A.06.590 Heavy equipment and truck repair.
21A.06.595 Helistop.
21A.06.597 Historic resource.
21A.06.598 Historic resource inventory.
21A.06.599 Historical flood hazard information.
21A.06.600 Hobby, toy, and game shop.
21A.06.605 Home industry.
21A.06.610 Home occupation.
21A.06.615 Household pets.
21A.06.620 Hydroelectric generation facility.

21A.06.625 Impervious surface.
21A.06.628 Impoundment.
21A.06.630 Improved public roadways.
21A.06.635 Individual transportation and taxi.
21A.06.637 Infiltration rate.
21A.06.638 Instream structure.
21A.06.640 Interim recycling facility.
21A.06.641 Interlocal agreement.
21A.06.641C Invasive vegetation.
21A.06.642 Irrigation efficiency.
21A.06.645 Jail.
21A.06.650 Jail farm.
21A.06.653 Jetty.
21A.06.655 Jewelry store.
21A.06.658 Joint use driveway.
21A.06.660 Kennel, commercial.
21A.06.660A Kennel, hobby.
21A.06.661 Kennel-free dog boarding and daycare.
21A.06.662 Kitchen or kitchen facility.
21A.06.665 Landfill.
21A.06.667 Landscape water features.
21A.06.670 Landscaping.
21A.06.675 Landslide.
21A.06.680 Landslide hazard area.
21A.06.683 Letter of map amendment.
21A.06.684 Letter of map revision.
21A.06.685 Level of service ("LOS"), traffic.
21A.06.690 Light equipment.
21A.06.695 Livestock.
21A.06.700 Livestock, large.
21A.06.705 Livestock, small.
21A.06.707 Livestock heavy use area.
21A.06.708 Livestock manure storage facility.
21A.06.710 Livestock sales.
21A.06.715 Loading space.
21A.06.720 Log storage.
21A.06.725 Lot.
21A.06.730 Lot line, interior.
21A.06.731 Maintenance.
21A.06.732 Manufactured home or mobile home.
21A.06.734 Mapping partner.
21A.06.7341 Marijuana.
21A.06.7342 Marijuana greenhouse.
21A.06.7344 Marijuana processor, recreational.
21A.06.7346 Marijuana producer, recreational.
21A.06.7348 Marijuana retailer, recreational.
21A.06.735 Marina.
21A.06.738 Master program, shoreline.
21A.06.740 Material error.
21A.06.742 Materials processing facility.
21A.06.743 Maximum extent practical.
21A.06.745 Microwave.

21A.06.750 Mitigation.
21A.06.751 Mitigation bank.
21A.06.752 Mitigation banking.
21A.06.753 Mixed-use development.
21A.06.755 Mobile home.
21A.06.760 Mobile home park.
21A.06.765 Monitoring.
21A.06.770 Monuments, tombstones, and gravestones sales.
21A.06.775 Motor vehicle, boat and mobile home dealer.
21A.06.780 Motor vehicle and bicycle manufacturing.
21A.06.782 Mulch.
21A.06.785 Municipal water production.
21A.06.787 Music and dance entertainment venue.
21A.06.790 Native vegetation.
21A.06.795 Naturalized species.
21A.06.796 Navigability or navigable.
21A.06.796A Nearshore.
21A.06.797 Net buildable area.
21A.06.799 No net loss of shoreline ecological function.
21A.06.800 Nonconformance.
21A.06.805 Nonhydro-electric generation facility.
21A.06.810 Non-ionizing electromagnetic radiation ("NIER").
21A.06.815 Noxious weed.
21A.06.817 Off-street required parking lot.
21A.06.819 Open space.
21A.06.820 Open-work fence.
21A.06.825 Ordinary high water mark.
21A.06.830 Outdoor performance center.
21A.06.831 Overburden-cover-to-seam-thickness ratio.
21A.06.832 Overspray.
21A.06.834 Paintball.
21A.06.835 Park.
21A.06.837 Park, recreation or multiuse.
21A.06.840 Park service area.
21A.06.845 Parking lot aisle.
21A.06.850 Parking lot unit depth.
21A.06.855 Parking space.
21A.06.860 Parking space angle.
21A.06.865 Party of record.
21A.06.870 Peak hour.
21A.06.875 Permanent school facilities.
21A.06.880 Personal medical supply store.
21A.06.882 Personal wireless services.
21A.06.885 Pet shop.
21A.06.890 Photographic and electronic shop.
21A.06.892 Pier or dock.
21A.06.895 Plant associations of infrequent occurrence.
21A.06.897 Plant factor.
21A.06.899 Potable water.
21A.06.899C Preliminary flood insurance rate map.
21A.06.899E Preliminary flood insurance study.
21A.06.900 Private.

21A.06.908 Processing operation, waste materials.
21A.06.910 Professional office.
21A.06.913 Public Access.
21A.06.915 Public agency.
21A.06.920 Public agency animal control facility.
21A.06.925 Public agency archive.
21A.06.930 Public agency or utility office.
21A.06.935 Public agency or utility yard.
21A.06.940 Public agency training facility.
21A.06.942 Public road right-of-way structure.
21A.06.943 Public transportation amenities.
21A.06.944 Puget Sound counties.
21A.06.944C Racetrack
21A.06.945 Radio frequency.
21A.06.950 Reasonable use.
21A.06.955 Receiving site.
21A.06.957 Reclamation.
21A.06.958 Recreation, active.
21A.06.9585 Recreation, passive.
21A.06.959 Recreation facilities, passive.
21A.06.960 Recreational vehicle ("RV").
21A.06.965 Recreational vehicle parks.
21A.06.970 Recyclable material.
21A.06.971 Redesignation.
21A.06.972 Reference evapotranspiration (Eto).
21A.06.973 Regional light rail transit.
21A.06.973C Regional motor sports facility.
21A.06.974 Regional road maintenance guidelines.
21A.06.980 Regional utility corridor.
21A.06.985 Relocatable facilities cost per student.
21A.06.990 Relocatable facility.
21A.06.995 Relocation facilities.
21A.06.997 Repair.
21A.06.998 Replace.
21A.06.1000 Restoration.
21A.06.1002 Resource land tract.
21A.06.1005 Retail comparison.
21A.06.1010 Retail convenience.
21A.06.10105 Retail nursery, garden center and farm supply store.
21A.06.1011 Retaining wall.
21A.06.1011A Road amenities.
21A.06.1011C Roadway.
21A.06.1012 Runoff.
21A.06.1013 Rural equestrian community trail.
21A.06.1014 Rural forest focus areas.
21A.06.1014F Rural public infrastructure maintenance facility.
21A.06.1015 Salmonid.
21A.06.1020 School bus base.
21A.06.1025 School district.
21A.06.1030 School district support facility.
21A.06.1035 Schools, elementary, and middle/junior high.
21A.06.1040 Schools, secondary or high school.

21A.06.1043 Secure community transition facility ("SCTF").
21A.06.1045 Seismic hazard area.
21A.06.1050 Self-service storage facility.
21A.06.1055 Sending site.
21A.06.1060 Senior citizen.
21A.06.1062 Senior citizen assisted housing.
21A.06.1070 Setback.
21A.06.1075 Shelters for temporary placement.
21A.06.1080 Shooting range.
21A.06.1081 Shorelands.
21A.06.1082 Shoreline.
21A.06.1082A Shoreline management conditional use.
21A.06.1082B Shoreline jurisdiction.
21A.06.1082C Shoreline protection.
21A.06.1082D Shoreline variance.
21A.06.1083 Shorelines.
21A.06.1083A Shorelines of statewide significance.
21A.06.1084 Side channel.
21A.06.1085 Sign.
21A.06.1090 Sign, awning.
21A.06.1095 Sign, changing message center.
21A.06.1100 Sign, community bulletin board.
21A.06.1105 Sign, directional.
21A.06.1110 Sign, freestanding.
21A.06.1115 Sign, fuel price.
21A.06.1120 Sign, incidental.
21A.06.1125 Sign, indirectly illuminated.
21A.06.1130 Sign, monument.
21A.06.1135 Sign, off-premise directional.
21A.06.1140 Sign, on-premise.
21A.06.1145 Sign, permanent residential development identification.
21A.06.1150 Sign, portable.
21A.06.1155 Sign, projecting.
21A.06.1160 Sign, time and temperature.
21A.06.1165 Sign, wall.
21A.06.1167 Significant tree.
21A.06.1170 Site.
21A.06.1172 Site area.
21A.06.1175 Site cost per student.
21A.06.1180 Ski area.
21A.06.1182 Slope.
21A.06.1185 Soil recycling facility.
21A.06.1190 Source-separated organic material.
21A.06.1195 Special use permit.
21A.06.1200 Specialized instruction school.
21A.06.1205 Specified sexual activities.
21A.06.1210 Sporting goods store.
21A.06.1215 Sports club.
21A.06.1220 Stable.
21A.06.1225 Standard of service, school districts.
21A.06.1230 Steep slope hazard area.
21A.06.1235 Stream functions.

21A.06.1240 Stream.
21A.06.1245 Street.
21A.06.1250 Street frontage.
21A.06.1255 Structure.
21A.06.1260 Student factor.
21A.06.1263 Subdivision or residential subdivision.
21A.06.1265 Submerged land.
21A.06.1268 Substantial Development.
21A.06.1270 Substantial improvement.
21A.06.1271 Surface water conveyance.
21A.06.1272 Surface water discharge.
21A.06.1273 TDR.
21A.06.1273A TDR amenities.
21A.06.1273B TDR bank fund.
21A.06.1273C TDR conversion ratio.
21A.06.1273D TDR executive board.
21A.06.1274 TDR extinguishment document.
21A.06.1274A Temporary farm worker housing.
21A.06.1275 Temporary use permit.
21A.06.1277 Theater.
21A.06.1278 Theatrical production services.
21A.06.1280 Tightline sewer.
21A.06.1285 Trails.
21A.06.1290 Transfer station.
21A.06.1295 Transit base.
21A.06.1305 Transitional housing facilities.
21A.06.1310 Transmission equipment.
21A.06.1315 Transmission line booster station.
21A.06.1320 Transmission support structure.
21A.06.1325 Transmitter building.
21A.06.1330 Transportation system management ("TSM").
21A.06.1331 Tree, hazard.
21A.06.1332 Trough subsidence.
21A.06.1335 Ultimate roadway section.
21A.06.1340 Urban Plan Development (UPD).
21A.06.1345 Use
21A.06.1347 Use, established.
21A.06.1348 Utility corridor.
21A.06.1350 Utility facility.
21A.06.1352 Vactor waste.
21A.06.1353 Vactor waste receiving facility.
21A.06.1355 Variance.
21A.06.1360 Vegetation.
21A.06.1365 Vocational school.
21A.06.1370 Volcanic hazard area.
21A.06.1375 Warehousing and wholesale trade.
21A.06.1380 Wastewater treatment facility.
21A.06.1382 Water budget.
21A.06.1385 Water dependent use.
21A.06.1386 Water enjoyment use.
21A.06.1388 Water oriented use.
21A.06.1389 Water related use.

21A.06.1390 Wet meadow, grazed or tilled.
21A.06.1391 Wetland.
21A.06.1392 Wetland complex.
21A.06.1393 Wetland creation.
21A.06.1395 Wetland edge.
21A.06.1397 Wetland enhancement.
21A.06.1400 Wetland, forested.
21A.06.1405 Wetland functions.
21A.06.1414 Wetland reestablishment.
21A.06.1416 Wetland rehabilitation.
21A.06.1418 Wetland vegetation class.
21A.06.1420 Wetpond.
21A.06.1422 Wildlife.
21A.06.1423 Wildlife habitat conservation area.
21A.06.1424 Wildlife habitat network.
21A.06.1425 Wildlife shelter.
21A.06.1427 Winery.
21A.06.1430 Work release facility.
21A.06.1432 Wrecked, dismantled or inoperative vehicle.
21A.06.1435 Yard waste processing facility.
21A.06.1440 Zoo animal breeding facility.

21A.06.005 Scope of chapter. This chapter contains definitions of technical and procedural terms used throughout the code and definitions of land uses listed in tables in K.C.C. 21A.08. The definitions in this chapter supplement the standard Industrial Classification Manual (SIC). See K.C.C. 21A.02 for rules on interpretation of the code, including use of these definitions. Development standards are found in K.C.C. 21A.12 through K.C.C. 21A.38. (Ord. 10870 § 41, 1993).

21A.06.007 Abandoned vehicle. An "abandoned vehicle" means any vehicle left upon the property of another without the consent of the owner of such property for a period of twenty-four hours or longer, except that a vehicle shall not be considered abandoned if its owner or operator is unable to remove it from the place where it is located and so notifies law enforcement officials and requests assistance. (Ord. 12024 § 10, 1995).

21A.06.010 Accessory living quarters. Accessory living quarters: living quarters in an accessory building for the use of the occupant or persons employed on the premises, or for temporary use of guests of the occupant. Such quarters have no kitchen and are not otherwise used as a separate dwelling unit. (Ord. 10870 § 42, 1993).

21A.06.013 Accessory use. Accessory use: a use, structure or activity that is:

A. Customarily associated with a principal use;
B. Located on the same site as the principal use; and
C. Subordinate and incidental to the principal use. (Ord. 17841 § 6, 2014).

21A.06.015 Accessory use, commercial/industrial. Accessory use, commercial/industrial: an accessory use to a commercial or industrial use, including, but not limited to:

A. Administrative offices;
B. Employee exercise facilities;

C. Employee food service facilities;

D. Incidental storage of raw materials and finished products sold or manufactured on-site;

E. Business owner or caretaker residence;

F. Cogeneration facilities; and

G. Ground maintenance facilities. (Ord. 17841 § 7, 2014: Ord. 10870 § 43, 1993).

21A.06.020 Accessory use, residential. Accessory use, residential: an accessory use to a residential use, including, but not limited to:

A. Accessory living quarters and dwellings;

B. Fallout or bomb shelters;

C. Keeping household pets or operating a hobby cattery or hobby kennel;

D. On-site rental office;

E. Pools, private docks or piers;

F. Antennae for private telecommunication services;

G. Storage of yard maintenance equipment;

H. Storage of private vehicles, such as motor vehicles, boats, trailers or planes;

I. Greenhouses;

J. Recreation space areas required under K.C.C. 21A.14.180 and play areas required under K.C.C. 21A.14.190; and

K. Home occupations and home industries under K.C.C. chapter 21A.30. (Ord. 17841 § 8, 2014: Ord. 11621 § 29, 1994: Ord. 10870 § 44, 1993).

21A.06.025 Accessory use, resource. Accessory use, resource: an accessory use to a resource use, including, but not limited to:

A. Housing of agricultural workers; and

B. Storage of agricultural products or equipment used on site. (Ord. 17841 § 9, 2014: Ord. 10870 § 45, 1993).

21A.06.026 Active recreation space. Active recreation space: recreation space that recognizes a higher level of public use than passive recreation space, and that will be developed for organized or intense recreation. Active recreation site includes both the active recreation uses and all necessary support services and facilities. (Ord. 14045 § 3, 2001).

21A.06.027 Adjustment factor. Adjustment factor: a factor that when applied to the reference evapotranspiration, adjusts for plant factors and irrigation efficiently. (Ord. 11210 § 22, 1994).

21A.06.035 Adult entertainment business. Adult entertainment business: An adult club, adult arcade or adult theatre as those terms are defined in the adult entertainment licensing provisions in K.C.C. Title 6. (Ord. 13546 § 2, 1999: Ord. 10870 § 47, 1993).

21A.06.037 Agricultural drainage. Agricultural drainage: any ditch, tile system, pipe or culvert primarily used to drain fields for horticultural or livestock activities. (Ord. 17539 § 16, 2013: Ord. 15051 § 3, 2004).

21A.06.040 Agricultural product sales. Agricultural product sales: the retail sale of items resulting from the practice of agriculture, including primary horticulture

products such as fruits, vegetables, grains, seed, feed and plants, primary animal products such as eggs, milk and meat, or secondary and value added products resulting from processing, sorting or packaging of primary agricultural products such as jams, cheeses, dried herbs or similar items. Agricultural product sales do not include marijuana, usable marijuana or marijuana-infused products. (Ord. 17710 § 1, 2013: Ord. 15032 § 1, 2004: Ord. 10870 § 48, 1993).

21A.06.042 Agriculture training facility. Agriculture training facility: an establishment developed for use by the property owner, its employees, and/or agricultural trainees for training activities which are related to or supportive of the agricultural use of the property and surrounding agricultural activities. Agriculture training facilities may include overnight lodging, meeting rooms, and educational activities. (Ord. 12691 § 1, 1997).

21A.06.043 Agricultural waterway. Agricultural waterway: A segment of a modified type F, N or O aquatic area that drains land defined in RCW 84.34.020 as farm and agricultural land or as farm and agricultural conservation land. (Ord. 17539 § 17, 2013).

21A.06.045 Aircraft, ship and boat manufacturing. Aircraft, ship and boat manufacturing: the fabrication and/or assembling of aircraft, ships or boats, including only uses located in SIC Industry Group Nos.:

A. 372-Aircraft and Parts; and
B. 373-Ship and Boat Building and Repairing. (Ord. 10870 § 49, 1993).

21A.06.050 Airport/heliport. Airport/heliport: any runway, landing area or other facility, excluding facilities for the primary use of the individual property owner which are classified as helistops, designed or used by public carriers or private aircraft for the landing and taking off of aircraft, including the following associated facilities:

A. Taxiways;
B. Aircraft storage and tie-down areas;
C. Hangars;
D. Servicing; and
E. Passenger and air freight terminals. (Ord. 10870 § 50, 1993).

21A.06.055 Alley. Alley: an improved thoroughfare or right-of-way, whether public or private, usually narrower than a street, that provides vehicular access to an interior boundary of one or more lots, and is not designed for general traffic circulation. (Ord. 10870 § 51, 1993).

21A.06.056 Alteration. Alteration: any human activity that results or is likely to result in an impact upon the existing condition of a critical area or its buffer. "Alteration" includes, but is not limited to, grading, filling, dredging, channelizing, applying herbicides or pesticides or any hazardous substance, discharging pollutants except stormwater, grazing domestic animals, paving, constructing, applying gravel, modifying topography for surface water management purposes, cutting, pruning, topping, trimming, relocating or removing vegetation or any other human activity that results or is likely to result in an impact to existing vegetation, hydrology, fish or wildlife or their habitats. "Alteration" does not include passive recreation such as walking, fishing or any other similar activities. (Ord. 15051 § 5, 2004: Ord. 10870 § 466, 1993. Formerly K.C.C. 21A.24.190).

21A.06.057 Alternative water sources. Alternative water sources: stored rainwater, or treated or recycled waste water of a quality suitable for uses such as landscape irrigation. Such water is not considered potable. (Ord. 11210 § 23, 1994).

21A.06.060 Amusement arcades. Amusement arcades: a building or part of a building in which five or more pinball machines, video games, or other such player-operator amusement devices (excluding juke boxes or gambling-related machines) are operated. (Ord. 10870 § 52, 1993).

21A.06.065 Animal, small. Animal, small: any animal other than livestock or animals considered to be predatory or wild which are kept outside a dwelling unit all or part of the time. Animals considered predatory or wild, excluding those in zoo animal breeding facilities, shall be considered small animals when they are taken into captivity for the purposes of breeding, domestication, training, hunting or exhibition. (Ord. 12709 § 1, 1997: Ord. 10870 § 53, 1993).

21A.06.067 Antenna. Antenna: any system of poles, panels, rods, reflecting discs or similar devices used for the transmission or reception or radio frequency signals. (Ord. 13129 § 20, 1998).

21A.06.070 Applicant. Applicant: a property owner, a public agency or a public or private utility that owns a right-of-way or other easement or has been adjudicated the right to such an easement under RCW 8.08.040, or any person or entity designated or named in writing by the property or easement owner to be the applicant, in an application for a development proposal, permit or approval. (Ord. 15051 § 6, 2004: Ord. 12196 § 53, 1996: Ord. 11700 § 42, 1995: Ord. 10870 § 54, 1993).

21A.06.072 Application rate. Application rate: the depth of water applied to an area expressed in inches per hour. (Ord. 11210 § 24, 1994).

21A.06.072B Aquaculture. Aquaculture: the culture or farming of fin fish, shellfish, algae or other plants or animals in fresh or marine waters. Aquaculture does not include: related commercial or industrial uses such as wholesale or retail sales; or final processing, packing or freezing. (Ord. 16985 § 133, 2010: Ord. 6511 § 1, 1983: Ord. 4222 § 1, 1979: Ord. 3688 § 202, 1978. Formerly K.C.C. 25.08.030).

21A.06.072C Aquatic area. Aquatic area:

A. Any nonwetland water feature including:

1. All shorelines of the state, rivers, streams, marine waters and bodies of open water, such as lakes, ponds and reservoirs;

2. Conveyance systems, such as a ditch, if any portion of the contributing water is from an aquatic area listed in subsection A.1. of this section;

3. Impoundments, such as a reservoir or pond, if any portion of the contributing water is from an aquatic area listed in subsection A.1. of this section.

B. "Aquatic area" does not include water features where the source of contributing water is entirely artificial, including, but not limited to, a ground water well. (Ord. 17191 § 19, 2011: Ord. 15051 § 7, 2004).

21A.06.073 Artist studio. Artist studio: an establishment providing a place solely for the practice or rehearsal of various performing or creative arts; including, but

not limited to, acting, dancing, singing, drawing, painting and sculpting. (Ord. 13022 § 1, 1998).

21A.06.075 Auction house. Auction house: an establishment where the property of others is sold by a broker or auctioneer to persons who attend scheduled sales periods or events. (Ord. 10870 § 55, 1993).

21A.06.078 Bank stabilization. Bank stabilization: an action taken to minimize or avoid the erosion of materials from the banks of rivers and streams. (Ord. 15051 § 8, 2004).

21A.06.080 Base flood. Base flood: a flood having a one percent chance of being equaled or exceeded in any given year, often referred to as the "100-year flood." (Ord. 10870 § 56, 1993).

21A.06.085 Base flood elevation. Base flood elevation: the water surface elevation of the base flood in relation to the National Geodetic Vertical Datum of 1929. (Ord. 10870 § 57, 1993).

21A.06.087 Basement. Basement: for purposes of development proposals in a flood hazard area, any area of a building where the floor subgrade is below ground level on all sides (Ord. 15051 § 9, 2004).

21A.06.090 Bed and breakfast guesthouse. Bed and breakfast guesthouse: a dwelling unit or accessory building within which bedrooms are available for paying guests. (Ord. 10870 § 58, 1993).

21A.06.095 Beehive. Beehive: a structure designed to contain one colony of honey bees (apis mellifera). (Ord. 10870 § 59, 1993).

21A.06.097 Berm. Berm: a constructed area of compacted earth. (Ord. 12987 § 1, 1998).

21A.06.098 Best management practice. Best management practice: a schedule of activities, prohibitions of practices, physical structures, maintenance procedures and other management practices undertaken to reduce pollution or to provide habitat protection or maintenance. (Ord. 15051 § 10, 2004).

21A.06.100 Billboard. Billboard: a sign, including both the supporting structural framework and attached billboard faces, used principally for advertising a business activity, use, product, or service unrelated to the primary use or activity of the property on which the billboard is located; excluding off-premise directional, or temporary real estate signs. (Ord. 10870 § 60, 1993).

21A.06.105 Billboard face. Billboard face: that portion of a billboard, exclusive of its structural support, on which changeable advertising copy is displayed, either by affixing preprinted poster panels or by painting copy on location; subclassified as follows:

A. Billboard face I -- a billboard face not exceeding a height of 14 feet or a width of 48 feet, and may also include temporary and irregularly shaped extensions subject to the area and duration limitations in K.C.C. 21A.20; and

B. Billboard face II -- a billboard face not exceeding a height of 12 feet or a width of 24 feet. (Ord. 10870 § 61, 1993).

21A.06.108 Bioengineering. Bioengineering: the use of vegetation and other natural materials such as soil, wood and rock to stabilize soil, typically against slides and stream flow erosion. When natural materials alone do not possess the needed strength to resist hydraulic and gravitational forces, "bioengineering" may consist of the use of natural materials integrated with human-made fabrics and connecting materials to create a complex matrix that joins with in-place native materials to provide erosion control. (Ord. 15051 § 11, 2004).

21A.06.113 Bog. Bog: a wetland that has no significant inflows or outflows and supports acidophilic mosses, particularly sphagnum. (Ord. 15051 § 13, 2004).

21A.06.115 Book, stationery, video and art supply store. Book, stationery, video and art supply store: an establishment engaged in the retail sale of books and magazines, stationery, records and tapes, video and art supplies, including only uses located in SIC Industry Nos.:

A. 5942-Book Stores;
B. 5943-Stationery Stores;
C. 5999-Architectural Supplies and Artists' Supply and Materials Stores;
D. 7841-Video tape rental;
E. 5735-Record, compact disc and prerecorded tape stores; and
F. 5736-Musical Instrument stores. (Ord. 10870 § 63, 1993).

21A.06.118 Breakwater. Breakwater: an off-shore structure either floating or not that may or may not be connected to the shore, such structure being designated to absorb or reflect back into the water body the energy of the waves. (Ord. 16985 § 65, 2010: Ord. 3688 § 208, 1978. Formerly K.C.C. 25.08.090).

21A.06.120 Broadleaf tree. Broadleaf tree: a tree characterized by leaves that are broad in width and may include both deciduous and evergreen species. (Ord. 10870 § 64, 1993).

21A.06.122 Buffer. Buffer: a designated area contiguous to a steep slope or landslide hazard area intended to protect slope stability, attenuation of surface water flows and landslide hazards or a designated area contiguous to and intended to protect and be an integral part of an aquatic area or wetland. (Ord. 15051 § 14, 2004: Ord. 10870 § 70, 1993).

21A.06.125 Building. Building: any structure having a roof. (Ord. 10870 § 65, 1993).

21A.06.135 Building envelope. Building envelope: area of a lot that delineates the limits of where a building may be placed on the lot. (Ord. 10870 § 67, 1993).

21A.06.140 Building facade. Building facade: that portion of any exterior elevation of a building extending from the grade of the building to the top of the parapet wall or eaves, for the entire width of the building elevation. (Ord. 10870 § 68, 1993).

21A.06.145 Building materials and hardware store. Building materials and hardware store: an establishment engaged in selling lumber and other building materials, paint and glass; including, but not limited to uses located in SIC Major Group No. 52-Building Materials, Hardware, Garden Supply, and Mobile Home Dealers, but excluding retail nursery, garden center and farm supply stores and mobile home dealers. (Ord. 15974 § 2, 2007: 10870 § 69, 1993).

21A.06.150 Bulk gas storage tanks. Bulk gas storage tanks: A tank from which illuminating, heating, or liquefied gas is distributed by piping directly to individual users. (Ord. 11157 § 29, 1993).

21A.06.155 Bulk retail. Bulk retail: an establishment offering the sale of bulk goods to the general public, including limited sales to wholesale customers. These establishments offer a variety of lines of merchandise including but not limited to: food, building, hardware and garden materials, dry goods, apparel and accessories, home furnishings, housewares, drugs, auto supplies, hobby, toys, games, photographic, and electronics. (Ord. 10870 § 71, 1993).

21A.06.156 Bulkhead. "Bulkhead" means a solid or open pile wall of rock, concrete, steel or timber or other materials or a combination of these materials erected generally parallel to and near the ordinary high water mark for the purpose of protecting adjacent wetlands and uplands from waves or currents. (Ord. 16985 § 68, 2010: Ord. 3688 § 209, 1978. Formerly K.C.C. 25.08.100).

21A.06.158 Camp, agriculture-related special needs. Camp, agriculture-related special needs: An establishment primarily engaged in operating a camp for youths with special needs due to a disability, as defined by the American with Disabilities Act of 1990, or due to medical conditions, that engages in activities that are related to or coexist with agriculture and agricultural activities onsite. Agriculture-related special needs camps do not include establishments that have as a primary purpose the treatment of addictions, correctional or disciplinary training, or housing for homeless persons. (Ord. 15909 § 1, 2007).

21A.06.160 Campground. Campground: an area of land developed for recreational use in temporary occupancy, such as: tents or recreational vehicles without hook-up facilities. (Ord. 10870 § 72, 1993).

21A.06.162 Camps, recreational and retreat. Camps, recreational and retreat: Establishments primarily engaged in operating recreational and retreat camps that offer a variety of active recreational activities such as trail riding, hiking, hunting, water-related activities such as swimming, kayaking, canoeing, rafting and fishing, and other similar outdoor activities, as well as, more passive activities based on the enjoyment of the natural setting. Recreational and retreat camps may provide overnight accommodation facilities, such as cabins and designated campsites, and other amenities for site users, such as meeting and assembly spaces, food services, recreational facilities and equipment and medical/health stations. Recreational and retreat camps do not include establishments that have as a primary purpose the treatment of addictions, correctional or disciplinary training, or housing for homeless persons. (Ord. 15606 § 4, 2006: Ord. 15245 § 1, 2005).

21A.06.165 Capacity, school. Capacity, school: the number of students a school district's facilities can accommodate district-wide, based on the district's standard of service, as determined by the school district. (Ord. 10870 § 73, 1993).

21A.06.170 Capital facilities plan, school. Capital facilities plan, school: a district's facilities plan adopted by the school board consisting of:

A. A forecast of future needs for school facilities based on the district's enrollment projections;

B. The long-range construction and capital improvements projects of the district;

C. The schools under construction or expansion;

D. The proposed locations and capacities of expanded or new school facilities;

E. At least a six-year financing plan component, updated as necessary to maintain at least a six-year forecast period, for financing needed school facilities within projected funding levels, and identifying sources of financing for such purposes, including bond issues authorized by the voters and projected bond issues not yet authorized by the voters;

F. Any other long-range projects planned by the district.

G. The current capacity of the district's school facilities based on the districts adopted standard of service, and a plan to eliminate existing deficiencies, if any, without the use of impact fees; and

H. An inventory showing the location and capacity of existing school facilities. (Ord. 10870 § 74, 1993).

21A.06.172 Catastrophic collapse. Catastrophic collapse: The collapse of the ground surface by overburden caving into underground voids created by mining. Catastrophic collapse does not include the effects from trough subsidence. (Ord. 13319 § 2, 1998).

21A.06.175 Cattery, commercial. Cattery, commercial: an establishment or facility where four or more cats are kept for commercial purposes, including, but not limited to, boarding, breeding and training. (Ord. 17841 § 10, 2014: Ord. 10870 § 75, 1993).

21A.06.177 Cattery, hobby.

A. Cattery, hobby: means a noncommercial cattery at or adjoining a private residence where four or more cats are bred or kept for exhibition for organized shows or the enjoyment of the species.

B. For purposes of this section, "noncommercial purposes" includes:

1. The breeding and sale of no more than two litters per applicable license year per female cat; and

2. The training of cats, but not for compensation. (Ord. 17841 § 11, 2014).

21A.06.180 Cemetery, columbarium or mausoleum. Cemetery, columbarium or mausoleum: land or structures used for interment of the dead or their remains. For purposes of the code, pet cemeteries are considered a subclassification of this use. (Ord. 10870 § 76, 1993).

21A.06.181 Channel. Channel: a feature that contains and was formed by periodically or continuously flowing water confined by banks. (Ord. 15051 § 15, 2004).

21A.06.181C Channel edge. Channel edge: The outer edge of the water's bankfull width or, where applicable, the outer edge of the associated channel migration zone. (Ord. 15051 § 16, 2004).

21A.06.181E Channel migration hazard area, moderate. Channel migration hazard area, moderate: a portion of the channel migration zone, as shown on King County's Channel Migration Zone maps, that lies between the severe channel migration hazard area and the outer boundaries of the channel migration zone. (Ord. 15051 § 17, 2004).

21A.06.181G Channel migration hazard area, severe. Channel migration hazard area, severe: a portion of the channel migration zone, as shown on King County's Channel Migration Zone maps, in which there is a higher level of channel migration hazard due to a high likelihood of continued, progressive bank erosion, rapid shifting of channel location or other imminent channel changes. (Ord. 17485 § 14, 2012: Ord. 15051 § 18, 2004).

21A.06.182 Channel migration zone. Channel migration zone: the area along a river channel within which the channel can be reasonably predicted, based on best available science, to migrate over time as a result of natural and normally occurring hydrological and related processes when considered with the characteristics of the river and its surroundings, as follows:

A. In areas located outside King County's shoreline jurisdiction, channel migration zones are as shown on King County's Channel Migration Zone maps. In those areas, "channel migration zone" means the corridor that includes the present channel, the severe channel migration hazard area and the moderate channel migration hazard area;

B. In areas located in King County's shoreline jurisdiction, the channel migration zone include:

1. Areas shown on King County's Channel Migration zone maps, including both the severe channel migration hazard area and the moderate channel migration hazard area; and

2. Areas not shown on King County's Channel Migration Zone maps but located within the floodplain. (Ord. 17485 § 15, 2012: Ord. 16985 § 130, 2010: Ord. 15051 § 19, 2004: Ord. 11621 § 20, 1994).

21A.06.185 Church, synagogue or temple. Church, synagogue or temple: a place where religious services are conducted, including those uses located in SIC Industry No. 866 and including accessory uses in the primary or accessory buildings such as religious education, reading rooms, assembly rooms, and residences for nuns and clergy. This definition does not include facilities for training of religious orders. (Ord. 10870 § 77, 1993).

21A.06.190 Classrooms, school. Classrooms, school: educational facilities of the district required to house students for its basic educational program. The classrooms are those facilities the district determines are necessary to best serve its student population. Specialized facilities as identified by the district, including but not limited to gymnasiums, cafeterias, libraries, administrative offices, and child care centers, shall not be counted as classrooms. (Ord. 10870 § 78, 1993).

21A.06.195 Clearing. Clearing: cutting, killing, grubbing or removing vegetation or other organic plant material by physical, mechanical, chemical or any other similar means. For the purpose of this definition of "clearing," "cutting" means the severing of the main trunk or stem of woody vegetation at any point. (Ord. 15051 § 20, 2004; Ord. 10870 § 79, 1993).

21A.06.196 Clustering. Clustering: development of a subdivision at the existing zoned density that reduces the size of individual lots and creates natural open space for the preservation of critical areas, parks and permanent open space or as a reserve for future development. (Ord. 15606 § 5, 2006).

21A.06.197 Coal mine by-products stockpiles. Coal mine by-products stockpiles: an accumulation, greater than five hundred cubic yards and five feet of vertical depth, of undisturbed waste and/or byproduct materials having greater than fifty percent, as measured by weight, of mineral coal or coal shale as a component and which resulted from historic coal mining. (Ord. 13319 § 3, 1998).

21A.06.200 Coal mine hazard area. Coal mine hazard area: an area underlain or directly affected by operative or abandoned subsurface coal mine workings. (Ord. 15051 § 21, 2004: Ord. 13319 § 1, 1998: Ord. 10870 § 80, 1993).

21A.06.202 Coastal high hazard area. Coastal high hazard area: Coastal high hazard area means an area of special flood hazard extending from offshore to the inland limit of a primary frontal dune along an open coast and any other area subject to high velocity wave action from storms. The area is designated on the flood insurance rate maps as zone V1-30, VE or V, and AE, AO or AH zones that are immediately adjacent to the V1-30, VE or V zones. (Ord. 17173 § 1, 2011).

21A.06.205 Cogeneration. Cogeneration: the sequential generation of energy and useful heat from the same primary source or fuel for industrial, commercial, or residential heating or cooling purposes. (Ord. 10870 § 81, 1993).

21A.06.210 Communication facility, major. Major communication facility: a communication facility, not classified as a minor communication facility, for transmission of:

A. Television signals; or

B. FM or AM radio signals. (Ord. 17191 § 23, 2011: Ord. 10870 § 82, 1993).

21A.06.215 Communication facility, minor. Minor communication facility: a communication facility for the:

A. Transmission and reception of:

1. Two-way or citizen band ("CB") radio signals; or
2. Point-to-point microwave signals;
3. Signals through FM radio translators; or
4. Signals through FM radio boosters under ten watts effective radiated power ("ERP"); and

B. Provision of personal wireless services. (Ord. 17191 § 24 2011: Ord. 10870 § 83, 1993).

21A.06.217 Community identification sign. Community identification sign: a sign identifying the location of a community or geographic area such as unincorporated

activity centers or rural towns designated by the comprehensive plan. (17416 § 14, 2012: Ord. 13022 § 2, 1998).

21A.06.220 Community residential facility ("CRF"). Community residential facility ("CRF"): living quarters meeting applicable federal and state standards that function as a single housekeeping unit and provide supportive services, including but not limited to counseling, rehabilitation and medical supervision, excluding drug and alcohol detoxification which is classified in K.C.C. 21A.08.050 as health services, and excluding a secure community transition facility as defined in R.C.W. 71.09.020 and in this chapter. For purposes of domestic violence shelters, minors living with a parent shall not be counted as part of the maximum number of residents. CRFs are further classified as follows:

A. CRF-I -- Nine to ten residents and staff;

B. CRF-II -- Eleven or more residents and staff.

If staffed by nonresident staff, each twenty-four staff hours per day equals one full-time residing staff member for purposes of subclassifying CRFs. (Ord. 16040 § 2, 2008: Ord. 14503 § 1, 2002: Ord. 10870 § 84, 1993).

21A.06.223 Commuter parking lot. Commuter parking lot: vehicle parking specifically for the purpose of access to a public transit system or for users of carpools or vanpools. (Ord. 13022 § 3, 1998).

21A.06.225 Compensatory storage. Compensatory storage: new, excavated storage volume equivalent to any flood storage that is eliminated by building filling or grading within the floodplain. (Ord. 16172 § 2, 2008: Ord. 10870 § 85, 1993).

21A.06.230 Conditional use permit. Conditional use permit: permit granted by the county to locate a permitted use on a particular property subject to conditions placed on the permitted use to ensure compatibility with nearby land uses. (Ord. 10870 § 86, 1993).

21A.06.235 Conference center. Conference center: an establishment developed primarily as a meeting facility, including only facilities for recreation, overnight lodging, and related activities provided for conference participants. (Ord. 10870 § 87, 1993).

21A.06.240 Confinement area. Confinement area. A confinement area is any open land area in which livestock are kept where the forage does not meet the definition of a grazing area. (Ord. 11157 § 2, 1993: Ord. 10870 § 88, 1993).

21A.06.245 Consolidation. Consolidation: the relocation to a consolidated transmission structure of the main transmit antennae of two or more FCC broadcast licensees which prior to such relocation utilized transmission structures located within a 1500 foot radius of the center of the consolidated transmission structure to support their main transmit antennae. (Ord. 10870 § 89, 1993).

21A.06.247 Construction and trades. Construction and trades: establishments that provide services related to construction of buildings and infrastructure, and other improvements to property. Such establishments include, SIC Major group no.'s 15-17, and SIC Industry group no. 078 (Landscape and Horticultural Services). (Ord. 12243 § 4, 1996).

21A.06.250 Construction cost per student, school. Construction cost per student, school: the estimated cost of construction of a permanent school facility in the district for the grade span of school to be provided, as a function of the district's facilities standard per grade span and taking into account the requirements of students with special needs. (Ord. 10870 § 90, 1993).

21A.06.252 Conversion factor. Conversion factor: a number that converts the water budget allowance from acre-inches per acre per year to gallons per square foot per year or cubic feet per year. (Ord. 11210 § 25, 1994).

21A.06.253 County fairground facility. County fairground facility: a site permanently designated and improved for holding a county fair, as provided in chapters 15.76 and 36.37 RCW. A county fairground facility may be used for hosting social, educational, recreational, arts and entertainment activities including, but not limited to:

A. Regional and local festivals;
B. Agricultural shows and events;
C. Animal shows;
D. Training, seminars, classes and conferences;
E. Trade and specialty shows;
F. Private and public parties, receptions or banquets;
G. Sporting events;
H. Carnivals;
I. Circuses;
J. Recreational vehicle parks;
K. Campgrounds;
L. Outdoor performance centers; and
M. Retail, rental and services consistent with the fairgrounds. (Ord. 14808 § 1, 2003).

21A.06.253C Critical aquifer recharge area. Critical aquifer recharge area: an area designated on the critical aquifer recharge area map adopted by K.C.C. 21A.24.311 that has a high susceptibility to ground water contamination or an area of medium susceptibility to ground water contamination that is located within a sole source aquifer or within an area approved in accordance with chapter 246-290 WAC as a wellhead protection area for a municipal or district drinking water system, or an area over a sole source aquifer and located on an island surrounded by saltwater. Susceptibility to ground water contamination occurs where there is a combination of permeable soils, permeable subsurface geology and ground water close to the ground surface. (Ord. 15051 § 23, 2004: Ord. 11481 § 1, 1994. Formerly K.C.C. 21A.06.253C).

21A.06.254 Critical area. Critical area: any area that is subject to natural hazards or a land feature that supports unique, fragile or valuable natural resources including fish, wildlife or other organisms or their habitats or such resources that carry, hold or purify water in their natural state. "Critical area" includes the following areas:

A. Aquatic areas;
B. Coal mine hazard areas;
C. Critical aquifer recharge area;
D. Erosion hazard areas;
E. Flood hazard areas;
F. Landslide hazard areas;

G. Seismic hazard areas;
H. Steep slope hazard areas;
I. Volcanic hazard areas;
J. Wetlands;
K. Wildlife habitat conservation areas; and
L. Wildlife habitat networks. (Ord. 15051 § 24, 2004).

21A.06.255 Critical drainage area. Critical drainage area: an area which has been formally determined by the King County surface water management department to require more restrictive regulation than county-wide standards afford in order to mitigate severe flooding, drainage, erosion or sedimentation problems which result from the cumulative impacts of development and urbanization. (Ord. 10870 § 91, 1993).

21A.06.260 Critical facility. Critical facility: a facility necessary to protect the public health, safety and welfare including, but not limited to, a facility defined under the occupancy categories of "essential facilities," "hazardous facilities" and "special occupancy structures" in the structural forces chapter or succeeding chapter in K.C.C. Title 16. Critical facilities also include nursing and personal care facilities, schools, senior citizen assisted housing, public roadway bridges and sites that produce, use or store hazardous substances or hazardous waste, not including the temporary storage of consumer products containing hazardous substances or hazardous waste intended for household use or for retail sale on the site. (Ord. 15051 § 25, 2004: Ord. 10870 § 92, 1993).

21A.06.261 Critical saltwater habitat. Critical saltwater habitat: all kelp beds, eelgrass beds, spawning and holding areas for forage fish, such as herring, smelt and sandlance; and subsistence, commercial and recreational shellfish beds; and mudflats, intertidal habitats with vascular plants and areas with which priority species have a primary association. (Ord. 16985 § 128, 2010).

21A.06.262 Daily care. Daily care: medical procedures, monitoring and attention that are necessarily provided at the residence of the patient by the primary provider of daily care on a 24-hour basis. (Ord. 12523 § 2, 1996).

21A.06.265 Daycare. Daycare: an establishment for group care of non-resident adults or children.

A. Daycare shall include only, SIC Industry No. 835, Child Day Care Services, SIC Industry No. 8322, Adult Daycare Centers and the following:

1.Adult Daycare, such as adult day health centers or social day care as defined by the Washington State Department of Social and Health Services;

2. Nursery schools for children under minimum age for education in public schools;

3. Privately conducted kindergartens or prekindergartens when not a part of a public or parochial school; and

4. Programs covering after-school care for school children.

B. Daycare establishments are subclassified as follows:

1. Daycare I -- a maximum of 12 adults or children in any 24 hour period; and

2. Daycare II -- over 12 adults or children in any 24 hour period. (Ord. 10870 § 93, 1993).

21A.06.270 Deciduous. Deciduous: a plant species with foliage that is shed annually. (Ord. 10870 § 94, 1993).

21A.06.275 Development rights, transfer of ("TDR"). Development rights, transfer of ("TDR"): the ability to transfer potentially buildable dwelling units from an eligible sending site to an eligible receiving site as provided in this code. (Ord. 14190 § 25, 2001: Ord. 10870 § 95, 1993).

21A.06.280 Department. Department: the King County department of permitting and environmental review or its successor agency. (Ord. 17420 § 97, 2012: Ord. 15051 § 26, 2004: Ord. 10870 § 96, 1993).

21A.06.285 Department and variety store. Department and variety store: an establishment engaged in the retail sale of a variety of lines of merchandise, such as; dry goods, apparel and accessories, home furnishings, housewares, including only uses located in SIC Major Group and Industry Nos.:

A. 53-General Merchandise;
B. 5947-Gift, Novelty, and Souvenir Shops; and
C. 5948-Luggage and Leather Goods Stores. (Ord. 10870 § 97, 1993).

21A.06.290 Destination resort. Destination resort: an establishment for resource-based recreation and intended to utilize outdoor recreational opportunities, including related services, such as food, overnight lodging, equipment rentals, entertainment and other conveniences for guests of the resort. (Ord. 10870 § 98, 1993).

21A.06.295 Developer or applicant. Developer or applicant: the person or entity who owns or holds purchase options or other development control over property for which development activity is proposed. [See Applicant 21A.06.070.] (Ord. 11978 § 2, 1995: Ord. 10870 § 99, 1993).

21A.06.300 Development activity. Development activity: any residential construction or expansion of a building, structure or use, any change in use of a building or structure, or any change in the use of land that creates additional demand for school facilities. (Ord. 10870 § 100, 1993).

21A.06.305 Development agreement. Development agreement: a recorded agreement between a UPD applicant and King County which incorporates the site plans, development standards, and other features of an Urban Plan Development as described in K.C.C. 21A.39. (Ord. 10870 § 101, 1993).

21A.06.310 Development proposal. Development proposal: any activities requiring a permit or other approval from King County relative to the use or development of land. (Ord. 10870 § 102, 1993).

21A.06.315 Development proposal site. Development proposal site: the legal boundaries of the parcel or parcels of land for which an applicant has or should have applied for authority from King County to carry out a development proposal. (Ord. 10870 § 103, 1993).

21A.06.318 Digester, agricultural anaerobic. Digester, agricultural anaerobic: an air tight, oxygen-free container that is fed animal manure and other agricultural waste

that uses a biological process to stabilize organic matter and produce methane gas for onsite energy generation or other beneficial use. (Ord. 17191 § 20, 2011).

21A.06.320 Direct traffic impact. Direct traffic impact: any increase in vehicle traffic generated by a proposed development which equals or exceeds ten (10) peak hour, peak direction vehicle trips on any roadway or intersection. (Ord. 10870 § 104, 1993).

21A.06.325 Director. Director: the director of King County department of permitting and environmental review, or his or her designee. (Ord. 17420 § 98, 2012: Ord. 10870 § 105, 1993).

21A.06.326 Ditch. Ditch: an artificial open channel used or constructed for the purpose of conveying water. (Ord. 15051 § 27, 2004).

21A.06.328 Dog training facility. Dog training facility: a place for the training of dogs for discipline, agility and other purposes. (Ord. 15032 § 3, 2004).

21A.06.330 Dormitory. Dormitory: a residential building that provides sleeping quarters, but not separate dwelling units, and may include common dining, cooking and recreation or bathing facilities. (Ord. 10870 § 106, 1993).

21A.06.331 Draft flood boundary work map. Draft flood boundary work map: a floodplain map prepared by a mapping partner, reflecting the results of a flood study or other floodplain mapping analysis. The draft flood boundary work map depicts floodplain boundaries, regulatory floodway boundaries, base flood elevations and flood cross sections, and provides the basis for the presentation of this information on a Preliminary Flood Insurance Rate Map or Flood Insurance Rate Map. (Ord. 15051 § 28, 2004).

21A.06.332 Drainage basin. Drainage basin: a drainage area that drains to the Cedar river, Green river, Snoqualmie river, Skykomish river, White river, Lake Washington or other drainage area that drains directly to Puget Sound. (Ord. 15051 § 29, 2004).

21A.06.332C Drainage facility. Drainage facility: a feature, constructed or engineered for the primary purpose of providing drainage, that collects, conveys, stores or treats surface water. A drainage facility may include, but is not limited to, a stream, pipeline, channel, ditch, gutter, lake, wetland, closed depression, flow control or water quality treatment facility and erosion and sediment control facility. (Ord. 15051 § 30, 2004).

21A.06.333 Drainage subbasin. Drainage subbasin: a drainage area identified as a drainage subbasin in a county-approved basin plan or, if not identified, a drainage area that drains to a body of water that is named and mapped and contained within a drainage basin. (Ord. 15051 § 31, 2004).

21A.06.333A Dredging. Dredging: the removal, displacement or disposal of unconsolidated earth material such as sand, silt, gravel or other materials, from water bodies, ditches or natural wetlands, whether during submerged conditions or dry

conditions. Dredging includes maintenance dredging and support activities. (Ord. 16985 § 70, 2010: Ord. 5734 § 1, 1981. Formerly K.C.C. 25.08.175).

21A.06.334 Drift cell. Drift cell: an independent segment of shoreline along which littoral movements of sediments occur at noticeable rates depending on wave energy and currents. Each drift cell typically includes one or more sources of sediment, such as a feeder bluff or stream outlet that spills sediment onto a beach, a transport zone within which the sediment drifts along the shore and an accretion area; an example of an accretion area is a sand spit where the drifted sediment material is deposited. (Ord. 15051 § 32, 2004).

21A.06.335 Drop box facility. Drop box facility: a facility used for receiving solid waste and recyclable from off-site sources into detachable solid waste containers, including the adjacent areas necessary for entrance and exit roads, unloading and vehicle turnaround areas. Drop box facilities normally service the general public with loose loads and may also include containers for separated recyclable. (Ord. 10870 § 107, 1993).

21A.06.340 Drug store. Drug store: an establishment engaged in the retail sale of prescription drugs, nonprescription medicines, cosmetics and related supplies, including only uses located in SIC Industry Group and Industry Nos.:

A. 591-Drug Stores and Proprietary Stores;
B. 5993-Tobacco Stores and Stands; and
C. 5999-Cosmetics Stores. (Ord. 10870 § 108, 1993).

21A.06.345 Dwelling unit. Dwelling unit: one or more rooms designed for occupancy by a person or family for living and sleeping purposes, containing kitchen facilities and rooms with internal accessibility, for use solely by the dwelling's occupants; dwelling units include but are not limited to bachelor, efficiency and studio apartments, factory-built housing and mobile homes. (Ord. 10870 § 109, 1993).

21A.06.350 Dwelling unit, accessory. Dwelling unit, accessory: a separate, complete dwelling unit attached to or contained within the structure of the primary dwelling; or contained within a separate structure that is accessory to the primary dwelling unit on the premises. (Ord. 10870 § 110, 1993).

21A.06.355 Dwelling unit, apartment. Dwelling unit, apartment: a dwelling unit contained in a building consisting of two or more dwelling units which may be stacked, or one or more dwellings with nonresidential uses. (Ord. 10870 § 111, 1993).

21A.06.358 Dwelling unit, cottage housing. Dwelling unit, cottage housing: a detached single-family dwelling unit located on a commonly owned parcel with common open space. (Ord. 15032 § 4, 2004)

21A.06.365 Dwelling unit, single detached. Dwelling unit, single detached: a detached building containing one dwelling unit. (Ord. 10870 § 113, 1993).

21A.06.370 Dwelling unit, townhouse. Dwelling unit, townhouse: a building containing one dwelling unit that occupies space from the ground to the roof, and is attached to one or more other townhouse dwellings by common walls. (Ord. 10870 § 114, 1993).

21A.06.375 Earth station. Earth station: a communication facility which transmits and/or receives signals to and from an orbiting satellite using satellite dish antennas. (Ord. 10870 § 115, 1993).

21A.06.378 Ecosystem. Ecosystem: the complex of a community of organisms and its environment functioning as an ecological unit. (Ord. 15051 § 33, 2004).

21A.06.380 Effective radiated power. Effective radiated power: the product of the antenna power input and the numerical antenna power gain. (Ord. 10870 § 116, 1993).

21A.06.390 Electrical substation. Electrical substation: a site containing equipment for the conversion of high voltage electrical power transported through transmission lines into lower voltages transported through distribution lines and suitable for individual users. (Ord. 10870 § 118, 1993).

21A.06.392 Emergency. Emergency: an occurrence during which there is imminent danger to the public health, safety and welfare, or that poses an imminent risk of property damage or personal injury or death as a result of a natural or human-made catastrophe, as determined by the director. (Ord. 15051 § 34, 2004: Ord. 11621 § 21, 1994).

21A.06.393 Employee, agricultural. Employee, agricultural: A person who renders personal services to, or under the direction of, an agricultural employer in connection with the employer's agricultural activity. (Ord. 15974 § 3, 2007).

21A.06.395 Energy resource recovery facility. Energy resource recovery facility: an establishment for recovery of energy in a usable form from mass burning or refuse-derived fuel incineration, pyrolysis or any other means of using the heat of combustion of solid waste. (Ord. 10870 § 119, 1993).

21A.06.398 Engineer, civil, geotechnical and structural. Engineer, civil, geotechnical and structural:

A. Civil engineer: an engineer who is licensed as a professional engineer in the branch of civil engineering by the state of Washington;

B. Geotechnical engineer: an engineer who is licensed as a professional engineer by the state of Washington and who has at least four years of relevant professional employment; and

C. Structural engineer: an engineer who is licensed as a professional engineer in the branch of structural engineering by the state of Washington. (Ord. 15051 § 35, 2004).

21A.06.400 Enhancement. Enhancement: for the purposes of critical area regulation, an action that improves the processes, structure and functions of ecosystems and habitats associated with critical areas or their buffers. (Ord. 15051 § 36, 2004: Ord. 10870 § 120, 1993).

21A.06.401 Environment, shoreline. Environment, shoreline: the categories of shorelines and shorelands established by the King County shoreline master program to differentiate between areas whose features imply differing objectives regarding their use and future development. (Ord. 16985 § 72, 2010: Ord. 3688 § 218, 1978. Formerly K.C.C. 25.08.190).

21A.06.402 Environmental education project. Environmental education project: A project that facilitates learning where the emphasis is placed on relationships between people and natural resources. Environmental education projects include, but are not limited to:

A. Bird blinds;
B. Observation decks;
C. Boardwalks; and
D. Signs or kiosks (Ord. 16267 § 11, 2008).

21A.06.405 Equipment, heavy. Equipment, heavy: high-capacity mechanical devices for moving earth or other materials, and mobile power units including, but not limited to:

A. Carryalls;
B. Graders;
C. Loading and unloading devices;
D. Cranes;
E. Drag lines;
F. Trench diggers;
G. Tractors;
H. Augers;
I. Bulldozers;
J. Concrete mixers and conveyers;
K. Harvesters;
L. Combines; or
M. Other major agricultural equipment and similar devices operated by mechanical power as distinguished from manpower. (Ord. 10870 § 121, 1993).

21A.06.410 Erosion. Erosion: the wearing away of the ground surface as the result of the movement of wind, water or ice. (Ord. 15051 § 37, 2004: Ord. 10870 § 122, 1993).

21A.06.415 Erosion hazard area. Erosion hazard area: an area underlain by soils that is subject to severe erosion when disturbed. These soils include, but are not limited to, those classified as having a severe to very severe erosion hazard according to the United States Department of Agriculture Soil Conservation Service, the 1990 Snoqualmie Pass Area Soil Survey, the 1973 King County Soils Survey or any subsequent revisions or addition by or to these sources such as any occurrence of River Wash ("Rh") or Coastal Beaches ("Cb") and any of the following when they occur on slopes inclined at fifteen percent or more:

A. The Alderwood gravely sandy loam ("AgD");
B. The Alderwood and Kitsap soils ("AkF");
C. The Beausite gravely sandy loam ("BeD" and "BeF");
D. The Kitsap silt loam ("KpD");
E. The Ovall gravely loam ("OvD" and "OvF");
F. The Ragnar fine sandy loam ("RaD"); and
G. The Ragnar-Indianola Association ("RdE"). (Ord. 15051 § 38, 2004: Ord. 10870 § 123, 1993).

21A.06.420 Evergreen. Evergreen: a plant species with foliage that persists and remains green year round. (Ord. 10870 § 124, 1993).

21A.06.425 Examiner. Examiner: the zoning and subdivision examiner as established by K.C.C.20.24. (Ord. 10870 § 125, 1993).

21A.06.427 Expansion. Expansion: the act or process of increasing the size, quantity or scope. (Ord. 15051 § 39, 2004).

21A.06.430 Fabric shop. Fabric shop: an establishment engaged in the retail sale of sewing supplies and accessories, including only uses located in SIC Industry Nos.:

A. 5949-Sewing, Needlework, and Piece Goods Stores; and

B. Awning Shops, Banner Shops, and Flag Shops found in 5999. (Ord. 10870 § 126, 1993).

21A.06.435 Facilities standard. Facilities standard: the space required by grade span, and taking into account the requirements of students with special needs, which is needed in order to fulfill the educational goals of the school district as identified in the district's capital facilities plan. (Ord. 10870 § 127, 1993).

21A.06.440 Factory-built commercial building. Factory-built commercial building: any structure that is either entirely or substantially prefabricated or assembled at a place other than a building site; and designed or used for non-residential human occupancy. (Ord. 10870 § 128, 1993).

21A.06.445 Fairground. Fairground: a site permanently constructed for holding a fair, except a county fair or for holding similar events, including, but not limited to:

A. Carnivals;

B. Circuses;

C. Expositions;

D. Animal shows; and

E. Either exhibitions or demonstrations, or both, of farm and home products with accompanying entertainment and amusements. (Ord. 14808 § 2, 2003: Ord. 10870 § 129, 1993).

21A.06.450 Family. Family: an individual; two or more persons related by blood, marriage or state registered domestic partnership under chapter 26.60 RCW; a group of two or more disabled residents protected under the Federal Housing Act Amendments, who are not related by blood, marriage or state registered domestic partnership under chapter 26.60 RCW, living together as a single housekeeping unit; a group of eight or fewer residents, who are not related by blood, marriage or state registered domestic partnership under chapter 26.60 RCW, living together as a single housekeeping unit; or a group living arrangement where eight or fewer residents receive supportive services such as counseling, foster care, or medical supervision at the dwelling unit by resident or non-resident staff. For purposes of this definition, minors living with parent shall not be counted as part of the maximum number of residents. (Ord. 17191 § 22, 2011: Ord. 11621 § 30, 1994: 10870 § 130, 1993).

21A.06.451 Farm field access drive. Farm field access drive: an impervious surface constructed to provide a fixed route for moving livestock, produce, equipment or supplies to and from farm fields and structures. (Ord. 15051 § 41, 2004).

21A.06.451A Farm pad. Farm pad; an artificially created mound of earth or an elevated platform placed within a flood hazard area and constructed to an elevation that

is above the base flood elevation to provide an area of refuge for livestock or small animals, and for storage of farm vehicles, agricultural equipment and shelter for farm products including, but not limited to, feed, seeds, flower bulbs and hay. (Ord. 16172 § 1, 2008).

21A.06.451M Farmers market. Farmers market: a regular assembly of vendors at a defined location for the purpose of promoting the sale of agricultural products grown or produced in Washington state. (Ord. 17191 § 21, 2011).

21A.06.452 Feasible. Feasible: capable of being done or accomplished. (Ord. 15051 § 40, 2004).

21A.06.453 Federal Emergency Management Agency. Federal Emergency Management Agency: the independent federal agency that, among other responsibilities, oversees the administration of the National Flood Insurance Program. (Ord. 15051 § 42, 2004).

21A.06.454 FEMA. FEMA: the Federal Emergency Management Agency. (Ord. 15051 § 43, 2004).

21A.06.455 FEMA floodway. FEMA floodway: the channel of the stream and that portion of the adjoining floodplain that is necessary to contain and discharge the base flood flow without increasing the base flood elevation more than one foot. (Ord. 15051 § 44, 2004: Ord. 10870 § 131, 1993).

21A.06.460 Feed store. Feed store: an establishment engaged in retail sale of supplies directly related to the day to day activities of agricultural production. (Ord. 10870 § 132, 1993).

21A.06.464 Fen. Fen: a wetland that receives some drainage from surrounding mineral soil and includes peat formed mainly from Carex and marsh-like vegetation. (Ord. 15051 § 45, 2004).

21A.06.465 Fence. Fence: a barrier for the purpose of enclosing space or separating lots, composed of:

A. Masonry or concrete walls, excluding retaining walls; or

B. Wood, metal or concrete posts connected by boards, rails, panels, wire or mesh. (Ord. 10870 § 133, 1993).

21A.06.467 Financial guarantee. Financial guarantee means a form of financial security posted to ensure timely and proper completion of improvements, to ensure compliance with the King County Code, and/or to warranty materials, workmanship of improvements, and design. Financial guarantees include assignments of funds, cash deposit, and surety bonds, and or other forms of financial security acceptable to the director. For the purposes of this title, the terms performance guarantee, maintenance guarantee, and defect guarantee are considered sub-categories of financial guarantee. (Ord. 12020 § 32, 1995).

21A.06.469 Float. Float: a structure or device that is not a breakwater and that is moored, anchored or otherwise secured in the waters of King County and is not

connected to the shoreline. (Ord. 16985 § 74, 2010: Ord. 3688 § 220, 1978. Formerly K.C.C. 25.08.210).

21A.06.470 Flood fringe, zero-rise. Flood fringe, zero-rise: that portion of the floodplain outside of the zero-rise floodway. The zero-rise flood fringe is generally associated with standing water rather than rapidly flowing water. (Ord. 15051 § 46, 2004: Ord. 10870 § 134, 1993).

21A.06.475 Flood hazard area. Flood hazard area: any area subject to inundation by the base flood or risk from channel migration including, but not limited to, an aquatic area, wetland or closed depression. A flood hazard area may contain one or more of the following components:

A. Floodplain;

B. Zero-rise flooding fringe;

C Zero-rise floodway;

D. FEMA floodway; and

E. Channel migration zones. (Ord. 17841 § 12, 2014: Ord. 15051 § 47, 2004: Ord. 11621 § 31, 1994: 10870 § 135, 1993).

21A.06.476 Flood Hazard Boundary Map. Flood Hazard Boundary Map: the initial insurance map issued by FEMA that identifies, based on approximate analyses, the areas of the one percent annual chance, one-hundred-year, flood hazard within a community. (Ord. 15051 § 48, 2004).

21A.06.478 Flood hazard data. Flood hazard data: data or any combination of data available from federal, state or other sources including, but not limited to, maps, critical area studies, reports, historical flood hazard information, channel migration zone maps or studies or other related engineering and technical data that identify floodplain boundaries, regulatory floodway boundaries, base flood elevations or flood cross sections. (Ord. 15051 § 49, 2004).

21A.06.480 Flood Insurance Rate Map. Flood Insurance Rate Map: the insurance and floodplain management map produced by FEMA that identifies, based on detailed or approximate analysis, the areas subject to flooding during the base flood. (Ord. 15051 § 50, 2004: Ord. 11157 § 3, 1993: Ord. 10870 § 136, 1993).

21A.06.485 Flood Insurance Study for King County. Flood Insurance Study for King County and Incorporated Areas: the April 19, 2005, official report provided by FEMA that includes flood profiles and the Flood Insurance Rate Map, along with any subsequently adopted revisions. (Ord. 17841 § 13, 2014: Ord. 15051 § 51, 2004: Ord. 11157 § 4, 1993: Ord. 10870 § 137, 1993).

21A.06.490 Flood protection elevation. Flood protection elevation: an elevation that is three feet above the base flood elevation. For flood zones that establish flood depths instead of base flood elevations, the flood protection elevation is the depth number specified in feet on the flood insurance rate map plus one foot. The flood protection elevation is measured from the highest adjacent grade of the footprint of the existing or proposed structure. If the flood insurance rate map does not specify a depth, the flood protection elevation is at least two feet as measured from the highest adjacent grade of the footprint of the existing or proposed structure. (Ord. 16686 § 1, 2009: Ord. 16267 § 12, 2008: Ord. 15051 § 52, 2004: Ord. 10870 § 138, 1993).

21A.06.492 Flood protection facility. Flood protection facility: a structure that provides protection from flood damage. Flood protection facility includes, but is not limited to, the following structures and supporting infrastructure:

A. Dams or water diversions, regardless of primary purpose, if the facility provides flood protection benefits;

B. Flood containment facilities such as levees, dikes, berms, walls and raised banks, including pump stations and other supporting structures; and

C. Bank stabilization structures, often called revetments. (Ord. 15051 § 53, 2004).

21A.06.495 Floodplain. Floodplain: the total area subject to inundation by the base flood. (Ord. 10870 § 139, 1993).

21A.06.497 Floodplain development. A. Floodplain development: any human-made change to improved or unimproved real estate in the floodplain, including, but not limited to, buildings or other structures, mining, dredging, filling, grading, paving, excavation or drilling operations, storage of equipment or materials, subdivision of land and removal of more than five percent of the native vegetation on the site.

B. "Floodplain development" does not include:

1. Routine maintenance of landscaping that does not involve grading, excavation or filling;

2. Removal of noxious weeds or invasive vegetation and replacement of nonnative vegetation with native vegetation;

3. Removal of a hazard tree;

4. Maintenance and repair of an existing structure;

5. Maintenance and repair of an above-ground utility;

6. Maintenance of the public road right-of-way structure;

7. Maintenance, repair or replacement of a flood protection facility; and

8. Agricultural activity, including tilling, discing, planting, seeding, harvesting, preparing soil, rotating crops and related activity that does not include fill. (Ord. 17539 § 18, 2013).

21A.06.500 Floodproofing, dry. Floodproofing, dry: adaptations that make a structure that is below the flood protection elevation watertight with walls substantially impermeable to the passage of water and with structural components capable of and with sufficient strength to resist hydrostatic and hydrodynamic loads including buoyancy. (Ord. 15051 § 54, 2004: Ord. 10870 § 140, 1993).

21A.06.505 Floodway, zero-rise. Floodway, zero-rise: the channel of a stream and that portion of the adjoining floodplain that is necessary to contain and discharge the base flood flow without any measurable increase in base flood elevation.

A. For the purpose of this definition, "measurable increase in base flood elevation" means a calculated upward rise in the base flood elevation, equal to or greater than 0.01 foot, resulting from a comparison of existing conditions and changed conditions directly attributable to alterations of the topography or any other flow obstructions in the floodplain. "Zero-rise floodway" is broader than that of the FEMA floodway but always includes the FEMA floodway.

B. "Zero-rise floodway" includes the entire floodplain unless a critical areas report demonstrates otherwise. (Ord. 15051 § 55, 2004: Ord. 10870 § 141, 1993).

21A.06.510 Florist shop. Florist shop: an establishment engaged in the retail sale of flowers and plants, including only uses located in SIC Industry Nos.:

A. 5992-Florists; and

B. 5999-Artificial Flowers. (Ord. 10870 § 142, 1993).

21A.06.512 Footprint. Footprint: the area encompassed by the foundation of a structure including building overhangs if the overhangs do not extend more than eighteen inches beyond the foundation and excluding uncovered decks. (Ord. 15051 § 56, 2004).

21A.06.513 Footprint, development. Footprint, development: the area encompassed by the foundations of all structures including paved and impervious surfaces. (Ord. 15051 § 57, 2004)

21A.06.515 Forest land. Forest land: land devoted primarily to growing and harvesting forest and timber products and designated as a forest production district by the King County Comprehensive Plan. (Ord. 10870 § 143, 1993).

21A.06.517 Forest management activity. Forest management activity: a forest practice regulated as a Class I, II, III or IV-S forest practice under chapter 76.09 RCW and Title 222 WAC or that is conducted in accordance with a forest management plan approved by the department of natural resources and parks. (Ord. 17539 § 19, 2013).

21A.06.520 Forest practice. Forest practice: any forest practice as defined in RCW 79.06.020. (Ord. 15051 § 58, 2004: Ord. 10870 § 144, 1993).

21A.06.525 Forest product sales. Forest product sales: the sale of goods produced, extracted, consumed, gathered or harvested from a forest including, but not limited to:

A. Trees;

B. Wood chips;

C. Logs;

D. Fuelwood;

E. Cones;

F. Christmas trees;

G. Berries;

H. Herbs; or

I. Mushrooms. (Ord. 10870 § 145, 1993).

21A.06.530 Forest research. Forest research: the performance of scientific studies relating to botany, hydrology, silviculture, biology and other branches of science in relation to management of forest lands, including only uses located in SIC Industry Nos.:

A. 8731-Commercial Physical and Biological Research;

B. 8733-Noncommercial Research Organizations; and

C. 8734-Testing Laboratories. (Ord. 10870 § 146, 1993).

21A.06.531 Forestry. Forestry: the science and practice of planting, cultivating, managing, using and conserving trees, forests and associated resources. "Forestry" includes, but is not limited to, scientific research related to forests and forest management for the harvesting of timber, production of forest products, recreation, aesthetics and ecological enhancement. (Ord. 17539 § 20, 2013).

21A.06.533 Fully contained community (FCC). FCC: a site specific development project consisting of conceptual site plan(s), development standards, processing and other elements, and which is consistent with the criteria provided in RCW 36.70A.350. (Ord. 12171 § 3, 1996).

21A.06.535 Furniture and home furnishings store. Furniture and home furnishings store: an establishment engaged in the retail sale of household furniture and furnishings for the home, including only uses located in SIC Major Group and Industry Nos.:

A. 57-Home Furniture, Furnishings, and Equipment Stores, except Industry Group No. 573; and

B. Baby carriages, Cake Decorating Supplies, Hot Tubs, Picture Frames (ready made), Swimming Pools (above-ground, not site-built), Telephone Stores and Typewriter Stores found in 5999. (Ord. 10870 § 147, 1993).

21A.06.540 General business service. General business service: an establishment engaged in providing services to businesses or individuals, with no outdoor storage or fabrication, including only uses located in SIC Major Group Nos.:

A. 60-Depository Institutions;

B. 61-Nondepository Credit Institutions;

C. 62-Security and Commodity Brokers, Dealers, Exchanges, and Services;

D. 63-Insurance Carriers;

E. 65-Real Estate, except 653 (Real Estate Agents and Directors);

F. 67-Holding and Other Investment Offices;

G. 7299 Miscellaneous Personal Services, not elsewhere classified;

H. 73-Business Services, except Industry Group and Industry Nos.:

I. 7312-Outdoor Advertising Services; and

J. 86-Membership Organizations, including administrative offices of organized religions found in 8661, but excluding churches and places of worship. (Ord. 10870 § 148, 1993).

21A.06.545 Geologist. Geologist: a person who holds a current license from the Washington state Geologist Licensing Board. (Ord. 15051 § 60, 2004: Ord. 10870 § 149, 1993).

21A.06.555 Golf course facility. Golf course facility: a recreational facility, under public or private ownership, designed and developed for golf activities with accessory uses including, but not limited to:

A. A driving range;

B. Miniature golf;

C. Pro shops;

D. Caddyshack buildings;

E. Swimming pools, tennis courts and other related recreational facilities;

F. Restaurants;

G. Office and meeting rooms; and

H. Related storage facilities. (Ord. 11157 § 5, 1993: Ord. 10870 § 152, 1993).

21A.06.558 Grade. Grade: the elevation of the ground surface. "Existing grade," "finish grade" and "rough grade" are defined as follows:

A. "Existing grade" means the grade before grading;

B. "Finish grade" means the final grade of the site that conforms to the approved plan as required under K.C.C. 16.82.060; and

C. "Rough grade" means the grade that approximately conforms to the approved plan as required under K.C.C. 16.82.060. (Ord. 15051 § 62, 2004).

21A.06.560 Grade span. Grade span: the categories into which a district groups its grades of students; i.e., elementary, middle or junior high school, and high school. (Ord. 10870 § 152, 1993).

21A.06.565 Grading. Grading: any excavation, filling, removing the duff layer or any combination thereof. (Ord. 10870 § 153, 1993).

21A.06.570 Grazing area. Grazing area: a grazing area is any open land area used to pasture livestock in which suitable forage is maintained over 80% of the area at all times of the year. (Ord. 11157 § 6, 1993: Ord. 10870 § 154, 1993).

21A.06.573 Groin. Groin: a barrier type structure extending from the backshore into the water across the beach. The purpose of a groin is to interrupt sediment movement along the shore. (Ord. 16985 § 76, 2010: Ord. 3688 § 222, 1978. Formerly K.C.C. 25.08.230).

21A.06.575 Groundcover. Groundcover: living plants designed to grow low to the ground (generally one foot or less) and intended to stabilize soils and protect against erosion. (Ord. 10870 § 155, 1993).

21A.06.577 Habitat. Habitat: the locality, site and particular type of environment occupied by an organism at any stage in its life cycle. (Ord. 15051 § 63, 2004).

21A.06.578 Habitat, fish. Habitat, fish: habitat that is used by anadromous or resident salmonids at any life stage at any time of the year including potential habitat likely to be used by anadromous or resident salmonids. "Fish habitat" includes habitat that is upstream of, or landward of, human-made barriers that could be accessible to, and could be used by, fish upon removal of the barriers. This includes off-channel habitat, flood refuges, tidal flats, tidal channels, streams and wetlands. (Ord. 16267 § 13, 2008: Ord. 15051 § 64, 2004).

21A.06.580 Hazardous household substance. Hazardous household substance: a substance as defined in RCW 70.105.010. (Ord. 10870 § 156, 1993).

21A.06.582 Hazardous liquid and gas transmission pipeline. Hazardous liquid and gas transmission pipeline: Hazardous liquid and gas transmission pipelines, as defined by RCW 81.88.040 and WAC 480-93-005. (Ord. 14045 § 4, 2001).

21A.06.585 Hazardous substance. Hazardous substance: a substance as defined in RCW 70.105.010. (Ord. 10870 § 157, 1993).

21A.06.590 Heavy equipment and truck repair. Heavy equipment and truck repair: the repair and maintenance of self-powered, self-propelled or towed mechanical devices, equipment and vehicles used for commercial purposes, such as tandem axle trucks, graders, backhoes, tractor trailers, cranes, lifts, but excluding automobiles and pick-up trucks under 10,000 pounds, recreational vehicles, boats and their trailers. (Ord. 11621 § 32, 1994: 10870 § 158, 1993).

21A.06.595 Helistop. Helistop: an area on a roof or on the ground used for the takeoff and landing of helicopters for the purpose of loading or unloading passengers or cargo but not including fueling service, hangers, maintenance or overhaul facilities. (Ord. 10870 § 159, 1993).

21A.06.597 Historic resource. Historic resource: a district, site, building, structure or object significant in national, state or local history, architecture, archaeology, and culture. (Ord. 11621 § 22, 1994).

21A.06.598 Historic resource inventory. Historic resource inventory: An organized compilation of information on historic resources considered to be potentially significant according to the criteria listed in K.C.C. 20.62.040A. The historic resource inventory is kept on file by the historic preservation officer and is updated from time to time to include newly eligible resources and to reflect changes to resources. (Ord. 11621 § 23, 1994).

21A.06.599 Historical flood hazard information. Historical flood hazard information: information that identifies floodplain boundaries, regulatory floodway boundaries, base flood elevations, or flood cross sections including, but not limited to, photos, video recordings, high water marks, survey information or news agency reports. (Ord. 15051 § 65, 2004).

21A.06.600 Hobby, toy, and game shop. Hobby, toy, and game shop: an establishment engaged in the retail sale of toys, games, hobby and craft kits, including only uses located in SIC Industry Nos.:

A. 5945-Hobby, Toy and Game Shops; and

B. 5999-Autograph and Philatelist Supply Stores, Coin Shops, and Stamps, philatelist-retail (except mail order). (Ord. 10870 § 160, 1993).

21A.06.605 Home industry. Home industry: a limited-scale sales, service or fabrication activity undertaken for financial gain, which occurs in a dwelling unit or residential accessory building, or in a barn or other resource accessory building and is subordinate to the primary use of the site as a residence. (Ord. 13022 § 7, 1998: Ord. 10870 § 161, 1993).

21A.06.610 Home occupation. Home occupation: a limited-scale service or fabrication activity undertaken for financial gain, which occurs in a dwelling unit or accessory building and is subordinate to the primary use of the site as a residence. (Ord. 13022 § 8, 1998: Ord. 10870 § 162, 1993).

21A.06.615 Household pets. Household pets: small animals that are kept within a dwelling unit. (Ord. 10870 § 163, 1993).

21A.06.620 Hydroelectric generation facility. Hydroelectric generation facility: an establishment for the generation of electricity using water sources. (Ord. 10870 § 164, 1993).

21A.06.625 Impervious surface. Impervious surface: A nonvertical surface artificially covered or hardened so as to prevent or impede the percolation of water into the soil mantle at natural infiltration rates including, but not limited to, roofs, swimming pools and areas that are paved, graveled or made of packed or oiled earthen materials

such as roads, walkways or parking areas. "Impervious surface" does not include landscaping and surface water flow control and water quality treatment facilities. (15051 § 66, 2004: Ord. 13190 § 14, 1998: Ord. 11978 § 3, 1995: Ord. 11802 § 2, 1995: Ord. 10870 § 165, 1993).

21A.06.628 Impoundment. Impoundment: a body of water collected in a reservoir, pond or dam or collected as a consequence of natural disturbance events. (Ord. 15051 § 67, 2004).

21A.06.630 Improved public roadways. Improved public roadways: public road rights-of-way that have been improved with at least two travel lanes and are maintained by either King County or the state of Washington. (Ord. 10870 § 166, 1993).

21A.06.635 Individual transportation and taxi. Individual transportation and taxi: an establishment engaged in furnishing individual or small group transportation by motor vehicle, including only uses located in SIC Industry Group and Industry Nos.:

A. 412-Taxicabs; and

B. 4119-Local Passenger Transportation, not elsewhere Classified. (Ord. 10870 § 167, 1993).

21A.06.637 Infiltration rate. Infiltration rate: the rate of water entry into the soil expressed in inches per hour. (Ord. 11210 § 27, 1994).

21A.06.638 Instream structure. Instream structure: anything placed or constructed below the ordinary high water mark, including, but not limited to, weirs, culverts, fill and natural materials and excluding dikes, levees, revetments and other bank stabilization facilities. (Ord. 15051 § 68, 2004).

21A.06.640 Interim recycling facility. Interim recycling facility: a site or establishment engaged in collection or treatment of recyclable materials, which is not the final disposal site, and including:

A. Drop boxes;

B. Collection, separation and shipment of glass, metal, paper or other recyclables. (Ord. 15032 § 5, 2004: Ord. 10870 § 168, 1993).

21A.06.641 Interlocal agreement. Interlocal agreement: for purposes of K.C.C. 21A.28, interlocal agreement means any agreement between the county, the district, and any city setting forth certain terms relating to the collection of impact fees by the county and distribution of those fees to the district. An interlocal agreement shall not be required where the county is the sole jurisdiction within the boundaries of the district that is assessing impact fees. (Ord. 11621 § 24, 1994).

21A.06.641C Invasive vegetation. Invasive vegetation: a plant species listed as obnoxious weeds on the noxious weed list adopted King County department of natural resources and parks. (Ord. 15051 § 69, 2004).

21A.06.642 Irrigation efficiency. Irrigation efficiency: is the coefficient of the amount of water beneficially used divided by the amount of water applied. This coefficient is derived from actual measurements and an evaluation of the general

characteristics of the type of irrigation system and management practices proposed. (Ord. 11210 § 26, 1994).

21A.06.645 Jail. Jail: a facility operated by a governmental agency; designed, staffed and used for the incarceration of persons for the purposes of punishment, correction and rehabilitation following conviction of an offense. (Ord. 10870 § 169, 1993).

21A.06.650 Jail farm. Jail farm: a farm or camp on which persons convicted of minor law violations are confined and participate in agriculture and other work activities of the facility. (Ord. 10870 § 170, 1993).

21A.06.653 Jetty. Jetty: an artificial barrier used to change the natural littoral drift to protect inlet entrances from clogging by excess sediment. (Ord. 16985 § 78, 2010: Ord. 3688 § 224, 1978. Formerly K.C.C. 25.08.250).

21A.06.655 Jewelry store. Jewelry store: an establishment engaged in the retail sale of a variety of jewelry products, including only uses located in SIC Industry Nos.:

A. 5944-Jewelry Stores; and

B. Gem stones and Rock specimens found in 5999. (Ord. 10870 § 171, 1993).

21A.06.658 Joint use driveway. Joint use driveway: A jointly owned and/or maintained vehicular access to two residential properties. (Ord. 11621 § 25, 1994).

21A.06.660 Kennel, commercial. Kennel, commercial: an establishment or facility where for or more dogs are kept for commercial purposes, including, but not limited to, boarding, breeding and training. A commercial kennel does not include a dog daycare facility. (Ord. 17841 § 14, 2014: Ord. 10870 § 172, 1993).

21A.06.660A Kennel, hobby.

A. Kennel, hobby: a noncommercial kennel at or adjoining a private residence where four or more adult dogs are bred or kept for any combination of hunting, training and exhibition for organized shows, for field, working or obedience trials or for the enjoyment of the species.

B. For purposes of this section, "noncommercial purposes" includes:

1. The breeding and sale of no more than one litter per applicable license year per female dog; and

2. The training of dogs, but not for compensation. (Ord. 17841 § 15, 2014).

21A.06.661 Kennel-free dog boarding and daycare. Kennel-free dog boarding and daycare: Dog boarding or daycare facility that utilizes rooms or outdoor exercise area, rather than cages or cement floored runs, to allow for and encourage the socialization, interaction and exercise of dogs. (Ord. 15816 § 3, 2007).

21A.06.662 Kitchen or kitchen facility. Kitchen or kitchen facility: an area within a building intended for the preparation and storage of food and containing:

A. An appliance for the refrigeration of food;

B. An appliance for the cooking or heating of food; and

C. A sink. (Ord. 12786 § 1, 1997).

21A.06.665 Landfill. Landfill: a disposal site or part of a site at which refuse is deposited. (Ord. 10870 § 173, 1993).

21A.06.667 Landscape water features. Landscape water features: a pond, pool or fountain used as a decorative component of a development. (Ord. 11210 § 28, 1994).

21A.06.670 Landscaping. Landscaping: live vegetative materials required for a development. Said materials provided along the boundaries of a development site is referred to as perimeter landscaping. (Ord. 11210 § 36, 1994: Ord. 10870 § 174, 1993).

21A.06.675 Landslide. Landslide: episodic downslope movement of a mass including, but not limited to, soil, rock or snow. (Ord. 10870 § 175, 1993).

21A.06.680 Landslide hazard area. Landslide hazard area: an area subject to severe risk of landslide, such as:

A. An area with a combination of:

1. Slopes steeper than fifteen percent of inclination;
2. Impermeable soils, such as silt and clay, frequently interbedded with granular soils, such as sand and gravel; and
3. Springs or ground water seepage;

B. An area that has shown movement during the Holocene epoch, which is from ten thousand years ago to the present, or that is underlain by mass wastage debris from that epoch;

C. Any area potentially unstable as a result of rapid stream incision, stream bank erosion or undercutting by wave action;

D. An area that shows evidence of or is at risk from snow avalanches; or

E. An area located on an alluvial fan, presently or potentially subject to inundation by debris flows or deposition of stream-transported sediments. (Ord. 15051 § 70, 2004: Ord. 10870 § 176, 1993).

21A.06.683 Letter of map amendment. Letter of map amendment: an official determination by FEMA that a property has been inadvertently included in an area subject to inundation by the base flood as shown on a Flood Hazard Boundary Map or Flood Insurance Rate Map. (Ord. 15051 § 71, 2004).

21A.06.684 Letter of map revision. Letter of map revision: a letter issued by FEMA to revise the Flood Hazard Boundary Map or Flood Insurance Rate Map and Flood Insurance Study for a community to change base flood elevations, and floodplain and floodway boundary delineation. (Ord. 15051 § 72, 2004).

21A.06.685 Level of service ("LOS"), traffic. Level of service ("LOS") traffic: a quantitative measure of traffic congestion identified by a declining letter scale (A-F) as calculated by the methodology contained in the 1985 Highway Capacity Manual Special Report 209 or as calculated by another method approved by the department of transportation. LOS "A" indicates free flow of traffic with no delays while LOS "F" indicates jammed conditions or extensive delay. (Ord. 14199 § 231, 2001: Ord. 10870 § 177, 1993).

21A.06.690 Light equipment. Light equipment: hand-held tools and construction equipment, such as chain saws, wheelbarrows and post-hole diggers. (Ord. 10870 § 178, 1993).

21A.06.695 Livestock. Livestock: grazing animals kept either in open fields or structures for training, boarding, home use, sales, or breeding and production, including but not limited to:

A. Cattle;

B. Riding and draft horses;

C. Hogs, excluding pigs weighing under 120 lbs. and standing 20 inches or less at the shoulder which are kept as pets or small animals;

D. Sheep; and

E. Goats. (Ord. 10870 § 179, 1993).

21A.06.700 Livestock, large. Livestock, large: cattle, horses, and other livestock generally weighing over 500 pounds. (Ord. 10870 § 180, 1993).

21A.06.705 Livestock, small. Livestock, small: hogs, excluding pigs weighing under 120 lbs. and standing 20 inches or less at the shoulder which are kept as household pets or small animals, sheep, goats, miniature horses, llamas, alpaca and other livestock generally weighing under 500 pounds. (Ord. 10870 § 181, 1993).

21A.06.707 Livestock heavy use area. Livestock heavy use area: an enclosure, typically constructed with footing material, such as gravel, used to keep grazing livestock off pasture from late fall through early spring or when pastures are grazed down to reduce soil erosion, protect water quality and improve pasture productivity, aesthetics and livestock health. (Ord. 17539 § 21, 2013).

21A.06.708 Livestock manure storage facility. Livestock manure storage facility: an impoundment made by constructing an embankment, pit or structure for the purpose of temporarily storing manure, liquid or slurry manure, agricultural wastewater or other organic agricultural waste before agronomic use to facilitate nutrient management and protect water quality. (Ord. 17539 § 22, 2013).

21A.06.710 Livestock sales. Livestock sales: the sale of livestock but not including auctions. (Ord. 10870 § 182, 1993).

21A.06.715 Loading space. Loading space: a space for the temporary parking of a vehicle while loading or unloading cargo or passengers. (Ord. 10870 § 183, 1993).

21A.06.720 Log storage. Log storage: a facility for the open or enclosed storage of logs which may include repair facilities for equipment used on-site or operations offices. (Ord. 10870 § 184, 1993).

21A.06.725 Lot. Lot: a physically separate and distinct parcel of property, which has been created pursuant to K.C.C. Title 19, Subdivision. (Ord. 10870 § 185, 1993).

21A.06.730 Lot line, interior. Lot line, interior: lot lines that delineate property boundaries along those portions of the property which do not abut a street. (Ord. 10870 § 186, 1993).

21A.06.731 Maintenance. Maintenance: the usual acts to prevent a decline, lapse or cessation from a lawfully established condition without any expansion of or significant change from that originally established condition. Activities within landscaped areas within areas subject to native vegetation retention requirements may be considered "maintenance" only if they maintain or enhance the canopy and understory cover. "Maintenance" includes repair work but does not include replacement work. When maintenance is conducted specifically in accordance with the Regional Road Maintenance Guidelines, the definition of "maintenance" in the glossary of those guidelines supersedes the definition of "maintenance" in this section. (Ord. 15051 § 73, 2004).

21A.06.732 Manufactured home or mobile home. Manufactured home or mobile home: a structure, transportable in one or more sections, that in the traveling mode is eight body feet or more in width or thirty-two body feet or more in length; or when erected on site, is three-hundred square feet or more in area; which is built on a permanent chassis and is designated for use with or without a permanent foundation when attached to the required utilities; which contains plumbing, heating, air-conditioning and electrical systems; and shall include any structure that meets all the requirements of this section, or of chapter 296-150M WAC, except the size requirements for which the manufacturer voluntarily complies with the standards and files the certification required by the federal Department of Housing and Urban Development. The term "manufactured home" or "mobile home" does not include a "recreational vehicle." (Ord. 15606 § 6, 2006: Ord. 15051 § 74, 2004).

21A.06.734 Mapping partner. Mapping partner: any organization or individual that is involved in the development and maintenance of a draft flood boundary work map, Preliminary Flood Insurance Rate Map or Flood Insurance Rate Map. (Ord. 15051 § 75, 2004).

21A.06.7341 Marijuana. Marijuana: all parts of the plant cannabis, whether growing or not, with a percentage concentration of delta-9 tetrahydrocannabinol content per dry weight of any part of the plant cannabis, or per volume or weight of marijuana product greater than 0.3 percent on a dry weight basis; the seeds thereof; the resin extracted from any part of the plant; and every compound, manufacture, salt, derivative, mixture, or preparation of the plant, its seeds or resin. Marijuana does not include the mature stalks of the plant, fiber produced from the stalks, oil or cake made from the seeds of the plant, any other compound, manufacture, salt, derivative, mixture or preparation of the mature stalks (except the resin extracted therefrom), fiber, oil, or cake, or the sterilized seed of the plant which is incapable of germination. (Ord. 17710 § 2, 2013).

21A.06.7342 Marijuana greenhouse. Marijuana greenhouse: a structure with a glass or rigid plastic roof and glass or rigid plastic walls designed and used to create an artificial climate for the growing of marijuana as licensed by the Washington state Liquor Control Board for the marijuana production that is of sufficient strength and stability to comply with the structural design load requirements of the building code and that is not used as a place for human habitation or by the general public. (Ord. 17710 § 3, 2013).

21A.06.7344 Marijuana processor, recreational. Marijuana processor, recreational: a facility licensed by the Washington state Liquor Control Board to

process marijuana into useable marijuana and marijuana-infused products, package and label useable marijuana and marijuana-infused products for sale in retail outlets, and sell useable marijuana and marijuana-infused products at wholesale to marijuana retailers. Recreational marijuana processors are classified as follows:

A. Recreational marijuana processor I -- processing which is limited to:
1. Drying, curing, and trimming; and
2. Packaging.

B. Recreational marijuana processor II -- all elements of processing including:
1. All recreational marijuana processor I activities;
2. Extracting concentrates and infusing products;
3. Mechanical and chemical processing; and
4. Packaging. (Ord. 17710 § 4, 2013).

21A.06.7346 Marijuana producer, recreational. Marijuana producer, recreational: a facility licensed by the Washington state Liquor Control Board for the production and sale at wholesale of marijuana to marijuana processors and other marijuana producers. (Ord. 17710 § 5, 2013).

21A.06.7348 Marijuana retailer, recreational. Marijuana retailer, recreational: a facility licensed by the Washington state Liquor Control Board where useable marijuana and marijuana-infused products may be sold at retail. (Ord. 17710 § 6, 2013).

21A.06.735 Marina. Marina: an establishment providing docking, moorage space and related activities limited to the provisioning or minor repair of pleasure boats and yachts; and accessory facilities including, but not limited to:

A. Showers;
B. Toilets; and
C. Self-service laundries. (Ord. 10870 § 187, 1993).

21A.06.738 Master program, shoreline. Master program, shoreline: the comprehensive shoreline use plan for King County consisting of:

A. The King County shoreline management goals and policies, set forth in King County Comprehensive Plan Chapter 5, that guide environmental designations, shoreline protection, shoreline use and shoreline modifications; and

B. The development regulations identified in K.C.C. 20.12.205. (Ord. 16985 § 80, 2010: Ord. 3688 § 228, 1978. Formerly K.C.C. 25.08.290).

21A.06.740 Material error. Material error: substantive information upon which a permit decision is based that is submitted in error or is omitted at the time of permit application. (Ord. 10870 § 188, 1993).

21A.06.742 Materials processing facility. Materials processing facility:

A. A site or establishment, not accessory to a mineral extraction or sawmill use, that is primarily engaged in crushing, grinding, pulverizing or otherwise preparing earth materials, vegetation, organic waste, construction and demolition materials or source separated organic materials and that is not the final disposal site; and

B. A site or establishment lawfully established before October 10, 2004, as an interim recycling facility for processing source separated, organic materials. (Ord. 17539 § 23, 2013: Ord. 15032 § 6, 2004)

21A.06.743 Maximum extent practical. Maximum extent practical: the highest level of effectiveness that can be achieved through the use of best available science or technology. In determining what is the "maximum extent practical," the department shall consider, at a minimum, the effectiveness, engineering feasibility, commercial availability, safety and cost of the measures. (Ord. 15051 § 76, 2004).

21A.06.745 Microwave. Microwave: electromagnetic waves with a frequency range of 300 megahertz (MHz) to 300 gigahertz (GHz). (Ord. 10870 § 189, 1993).

21A.06.750 Mitigation. Mitigation: an action taken to compensate for adverse impacts to the environment resulting from a development activity or alteration. (Ord. 15051 § 77, 2004: Ord. 10870 § 190, 1993).

21A.06.751 Mitigation bank. Mitigation bank: a property that has been protected in perpetuity and approved by appropriate county, state and federal agencies expressly for the purpose of providing compensatory mitigation in advance of authorized impacts through any combination of restoration, creation or enhancement of wetlands and, in exceptional circumstances, preservation of adjacent wetlands and wetland buffers or protection of other aquatic or wildlife resources. (Ord. 15051 § 78, 2004: Ord. 11621 § 26, 1994).

21A.06.752 Mitigation banking. Mitigation banking: a system for providing compensatory mitigation in advance of authorized wetland impacts of development in King County in which credits are generated through restoration, creation, and/or enhancement of wetlands, and in exceptional circumstances, preservation of adjacent wetlands, wetland buffers, and/or other aquatic resources. (Ord. 11621 § 27, 1994).

21A.06.753 Mixed-use development. Mixed-use development: a combination of residential and non-residential uses within the same building or site as part of an integrated development project with functional interrelationships and coherent physical design. (Ord. 14045 § 5, 2001).

21A.06.755 Mobile home. See manufactured home. (Ord. 15606 § 7, 2006: Ord. 10870 § 191, 1993).

21A.06.760 Mobile home park. Mobile home park: a development with two or more improved pads or spaces designed to accommodate mobile homes. (Ord. 10870 § 192, 1993).

21A.06.765 Monitoring. Monitoring: evaluating the impacts of development proposals on biologic, hydrologic and geologic systems and assessing the performance of required mitigation through the collection and analysis of data for the purpose of understanding and documenting changes in natural ecosystems, functions and features including, but not limited to, gathering baseline data. (Ord. 10870 § 193, 1993).

21A.06.770 Monuments, tombstones, and gravestones sales. Monuments, tombstones, and gravestones sales: the retail sale of custom stonework products including only uses located in SIC Industry No. 5599-Monuments, finished to custom order, Tombstones and Gravestones finished. (Ord. 10870 § 194, 1993).

21A.06.775 Motor vehicle, boat and mobile home dealer. Motor vehicle, boat and mobile home dealer: an establishment engaged in the retail sale of new and/or used automobiles, motor homes, motorcycles, trailers, boats or mobile homes, including only uses located in SIC Major Group and Industry Group Nos.:

A. 55-Automotive Dealers and Gasoline Service Stations except:
  1. 553-Auto and Home Supply Stores;
  2. 554-Gasoline Service Stations; and
B. Aircraft dealers found in 5599:
  1. 527-Mobile Home Dealers; and
  2. Yacht brokers found in 7389. (Ord. 10870 § 195, 1993).

21A.06.780 Motor vehicle and bicycle manufacturing. Motor vehicle and bicycle manufacturing: fabricating or assembling complete passenger automobiles, trucks, commercial cars and buses, motorcycles, and bicycles, including only uses located in SIC Industry Group Nos.:

A. 371-Motor Vehicles and Motor Vehicle Equipment; and
B. 375-Motorcycles, Bicycles, and Parts. (Ord. 10870 § 196, 1993).

21A.06.782 Mulch. Mulch: any material such as leaves, bark, straw left loose and applied to the soil surface to reduce evaporation. (Ord. 11210 § 29, 1994).

21A.06.785 Municipal water production. Municipal water production: the collection and processing of surface water through means of dams or other methods of impoundment for municipal water systems. (Ord. 11157 § 7, 1993: Ord. 10870 § 197, 1993).

21A.06.787 Music and dance entertainment venue. Music and dance entertainment venue: a business in which the primary purpose of the business is to provide entertainment to its patrons in the form of dancing and live or electronic music. (Ord. 17178 § 4, 2011).

21A.06.790 Native vegetation. Native vegetation: plant species indigenous to the Puget Sound region that reasonably could be expected to naturally occur on the site. (Ord. 15051 § 79, 2004; Ord. 10870 § 198, 1993).

21A.06.795 Naturalized species. Naturalized species: non-native species of vegetation that are adaptable to the climatic conditions of the coastal region of the Pacific Northwest. (Ord. 10870 § 199, 1993).

21A.06.796 Navigability or navigable. Navigability or navigable: the capability of susceptibility of a body of water of having been or being used for the transport of useful commerce. The state of Washington considers all bodies of water meandered by government surveyors as navigable unless otherwise declared by a court. (Ord. 16985 § 81, 2010).

21A.06.796A Nearshore. Nearshore: the area beginning at the crest of coastal bluffs and extending seaward through the marine photics zone, and to the head of tide in coastal rivers and streams. Nearshore includes estuaries. (Ord. 16985 § 82, 2010).

21A.06.797 Net buildable area. Net buildable area: the "site area" less the following areas:

A. Areas within a project site that are required to be dedicated for public rights-of-way in excess of sixty feet in width;

B. Critical areas and their buffers to the extent they are required by K.C.C. chapter 21A.24 to remain undeveloped;

C. Areas required for storm water control facilities other than facilities that are completely underground, including, but not limited to, retention or detention ponds, biofiltration swales and setbacks from such ponds and swales;

D. Areas required to be dedicated or reserved as on-site recreation areas;

E. Regional utility corridors; and

F. Other areas, excluding setbacks, required to remain undeveloped. (Ord. 15051 § 80, 2004: Ord. 11798 § 3, 1995: Ord. 11555 § 2, 1994).

21A.06.799 No net loss of shoreline ecological function. No net loss of shoreline ecological function: the maintenance of the aggregate total of King County shoreline ecological functions over time. The no net loss standard in WAC 173-26-186 requires that the impacts of shoreline use or development, whether permitted or exempt from permit requirements, be identified and mitigated such that there are no resulting adverse impacts on ecological functions or processes. (Ord. 16985 § 127, 2010).

21A.06.800 Nonconformance. Nonconformance: a use, improvement or structure established in conformance with King County's rules and regulations and other applicable local and state rules and regulations in effect at the time the use, improvement or structure was established that no longer conforms to King County's rules and regulations or other applicable local and state rules and regulations due to changes in the rules and regulations or their application to the subject property. (Ord. 17841 § 16, 2014: Ord. 10870 § 200, 1993).

21A.06.805 Nonhydro-electric generation facility. Nonhydro-electric generation facility: an establishment for the generation of electricity by nuclear reaction, burning fossil fuels, or other electricity generation methods. (Ord. 10870 § 201, 1993).

21A.06.810 Non-ionizing electromagnetic radiation ("NIER"). Non-ionizing electromagnetic radiation ("NIER"): electromagnetic radiation of low photon energy unable to cause ionization. (Ord. 10870 § 202, 1993).

21A.06.815 Noxious weed. Noxious weed: a plant species that is highly destructive, competitive or difficult to control by cultural or chemical practices, limited to any plant species listed on the state noxious weed list in chapter 16-750 WAC, regardless of the list's regional designation or classification of the species. (Ord. 15051 § 81, 2004: Ord. 10870 § 203, 1993).

21A.06.817 Off-street required parking lot. Off-street required parking lot; parking facilities constructed to meet the off-street parking requirements of K.C.C. 21A.18 for land uses located on a lot separate from the parking facilities. (Ord. 13022 § 4, 1998).

21A.06.819 Open space. Open space: areas left predominately in a natural state to create urban separators and greenbelts, sustain native ecosystems, connect and increase protective buffers for environmentally sensitive areas, provide a visual contrast to continuous development, reinforce community identity and aesthetics, or provide links between important environmental or recreational resources. (Ord. 14045 § 6, 2001).

21A.06.820 Open-work fence. Open-work fence: a fence in which the solid portions are evenly distributed and constitute no more than fifty (50) percent of the total surface area. (Ord. 10870 § 204, 1993).

21A.06.825 Ordinary high water mark. Ordinary high water mark: the mark found by examining the bed and banks of a stream, lake, pond or tidal water and ascertaining where the presence and action of waters are so common and long maintained in ordinary years as to mark upon the soil a vegetative character distinct from that of the abutting upland. In an area where the ordinary high water mark cannot be found, the line of mean high water in areas adjoining freshwater or mean higher high tide in areas adjoining saltwater is the "ordinary high water mark." In an area where neither can be found, the top of the channel bank is the "ordinary high water mark." In braided channels and alluvial fans, the ordinary high water mark or line of mean high water include the entire water or stream feature. (Ord. 15051 § 82, 2004: Ord. 10870 § 205, 1993).

21A.06.830 Outdoor performance center. Outdoor performance center: an establishment for the performing arts with open-air seating for audiences. Such establishments may include related services such as food and beverage sales and other concessions. (Ord. 10870 § 206, 1993).

21A.06.831 Overburden-cover-to-seam-thickness ratio. Overburden-cover-to-seam-thickness ratio: the thickness as measured from the ground surface to the top of the abandoned mine working divided by the extracted thickness of the coal seam, expressed as a ratio. A ten foot extracted coal seam will have a 10:1 overburden-cover-to-seam-thickness ratio at a depth of one hundred feet and a 15:1 overburden-cover-to-seam-thickness ratio at a depth of one hundred fifty feet. (Ord. 13319 § 4, 1998).

21A.06.832 Overspray. Overspray: irrigation water applied beyond the landscape area. (Ord. 11210 § 30, 1994).

21A.06.834 Paintball. A sport in which participants eliminate opponents from play by hitting them with paintballs shot from a compressed-gas-powered paintball gun. (Ord. 16267 § 14, 2008)

21A.06.835 Park. Park: a site owned by the public for recreational, exercise or amusement purposes. Park facilities include, but are not limited to:

A. Indoor facilities, such as:
   1. Gymnasiums
   2. Swimming pools; or
   3. Activity centers;

B. Outdoor facilities, such as:
   1. Playfields;
   2. Fishing areas;
   3. Picnic and related outdoor activity areas; or
   4. Approved campgrounds;

C. Areas and trails for:
   1. Hikers;
   2. Equestrians;
   3. Bicyclists; or
   4. Off-road recreational vehicle users; and

D. Facilities for on-site maintenance. (Ord. 17841 § 17, 2014: Ord. 13022 § 9, 1998: Ord. 10870 § 207, 1993).

21A.06.837 Park, recreation or multiuse. Park, recreation or multiuse: a park owned by King County that is designated by the department of natural resources and parks in the recreation category or the multiuse category. (Ord. 17841 § 18, 2014).

21A.06.840 Park service area. Park service area: established by the department, within which the dedications of land and fees received from new residential developments for the benefit of residents within such service area. (Ord. 10870 § 208, 1993).

21A.06.845 Parking lot aisle. Parking lot aisle: that portion of the off-street parking area used exclusively for the maneuvering and circulation of motor vehicles and in which parking is prohibited. (Ord. 10870 § 209, 1993).

21A.06.850 Parking lot unit depth. Parking lot unit depth: the linear distance within which one parking aisle is flanked by accessible rows of parking stalls as measured perpendicular to the parking aisle. (Ord. 10870 § 210, 1993).

21A.06.855 Parking space. Parking space: an area accessible to vehicles, improved, maintained and used for the sole purpose of parking a motor vehicle. (Ord. 10870 § 211, 1993).

21A.06.860 Parking space angle. Parking space angle: the angle measured from a reference line, generally the property line or center line of an aisle, at which motor vehicles are to be parked. (Ord. 10870 § 212, 1993).

21A.06.865 Party of record. Party of record ("POR"): a person who has submitted written comments, testified, asked to be notified or is the sponsor of a petition entered as part of the official county record on a specific development proposal. (Ord. 10870 § 213, 1993).

21A.06.870 Peak hour. Peak hour: the hour during the morning or afternoon when the most critical level of service occurs for a particular roadway or intersection. (Ord. 10870 § 214, 1993).

21A.06.875 Permanent school facilities. Permanent school facilities: facilities of a school district with a fixed foundation which are not relocatable facilities. (Ord. 10870 § 215, 1993).

21A.06.880 Personal medical supply store. Personal medical supply store: an establishment engaged in the retail sale of eyeglasses, contact lenses, hearing aids, and artificial limbs, including only uses located in SIC Industry Nos.:

A. 5995-Optical Goods Stores; and

B. 5999-Hearing Aids and Orthopedic and Artificial Limb Stores. (Ord. 10870 § 216, 1993).

21A.06.882 Personal wireless services. Personal wireless services: commercial mobile radio services, unlicensed wireless services, and common carrier

wireless exchange access services, as defined by federal laws and regulations. (Ord. 17191 § 25, 2011).

21A.06.885 Pet shop. Pet shop: an establishment engaged in the retail sale of pets, small animals, pet supplies, or grooming of pets, including only uses located in SIC Industry No. 5999-Pet shops. (Ord. 10870 § 217, 1993).

21A.06.890 Photographic and electronic shop. Photographic and electronic shop: an establishment engaged in the retail sale of cameras and photographic supplies, and a variety of household electronic equipment, including only uses located in SIC Industry No.:

A. 5946 - Camera and Photographic Supply Stores;
B. 5999 - Binoculars and Telescopes;
C. 5731 - Radio, Television, and Consumer Electronics Stores; and
D. 5734 - Computer and Computer Software Stores. (Ord. 10870 § 218, 1993).

21A.06.892 Pier or dock. Pier or dock: a structure built in or over, or floating upon, the water extending from the shore, that may be used as a landing place for air or water craft or recreational activities. (Ord. 16985 § 84, 2010: Ord. 3688 § 234, 1978. Formerly K.C.C. 25.08.370).

21A.06.895 Plant associations of infrequent occurrence. Plant associations of infrequent occurrence: one or more plant species of a landform type which does not often occur in King County because of the rarity of the habitat and/or the species involved or for other botanical or environmental reasons. (Ord. 10870 § 219, 1993).

21A.06.897 Plant factor. A factor which when multiplied by reference evapotranspiration, estimates the amount of water used by plants. (Ord. 11210 § 31, 1994).

21A.06.899 Potable water. Potable water: water suitable for human consumption. (Ord. 11210 § 32, 1994).

21A.06.899C Preliminary Flood Insurance Rate Map. Preliminary Flood Insurance Rate Map: the initial map issued by FEMA for public review and comment that delineates areas of flood hazard. (Ord. 15051 § 83, 2004).

21A.06.899E. Preliminary Flood Insurance Study. Preliminary Flood Insurance Study: the preliminary report provided by FEMA for public review and comment that includes flood profiles, text, data tables and photographs. (Ord. 15051 § 84, 2004).

21A.06.900 Private. Private: solely or primarily for the use of residents or occupants of the premises; e.g., a non-commercial garage used solely by residents or their guests is a private garage. (Ord. 10870 § 220, 1993).

21A.06.908 Processing operation, waste materials. Processing operation waste materials: a site or establishment, accessory to mineral extraction or sawmill use, that is primarily engaged in crushing, grinding, pulverizing or otherwise preparing earth materials, vegetation, organic waste, construction and demolition materials or recycled and source separated nonhazardous waste materials and that is not the final disposal site. (Ord. 15032 § 7, 2004).

21A.06.910 Professional office. Professional office: an office used as a place of business by licensed professionals, or persons in other generally recognized professions, which use training or knowledge of a technical, scientific or other academic discipline as opposed to manual skills, and which does not involve outside storage or fabrication, or on-site sale or transfer of commodities; including only the following SIC Major Group and Industry Nos.:

A. 64-Insurance Agents, Brokers and Service;
B. 653-Real Estate Agents and Directors;
C. 7291-Income Tax Return Preparation Services;
D. 81-Legal Services;
E. 871-Engineering, Architectural and Surveying Services;
F. 872-Accounting, Auditing and Bookkeeping Services; and
G. 874-Management and Public Relations Services. (Ord. 10870 § 222, 1993).

21A.06.913 Public Access. Public access: the ability of the general public to reach, touch and enjoy the water's edge, to travel on the waters of the state and to view the water and the shoreline from adjacent locations. (Ord. 16985 § 86, 2010: Ord. 3688 § 201, 1978. Formerly K.C.C. 25.08.020).

21A.06.915 Public agency. Public agency: any agency, political subdivision or unit of local government of this state including, but not limited to, municipal corporations, special purpose districts and local service districts, any agency of the State of Washington, the United States or any state thereof or any Indian tribe recognized as such by the federal government. (Ord. 10870 § 223, 1993).

21A.06.920 Public agency animal control facility. Public agency animal control facility: a facility for the impoundment and disposal of stray or abandoned small animals. (Ord. 10870 § 224, 1993).

21A.06.925 Public agency archive. Public agency archive: a facility for the enclosed storage of public agency documents or related materials, excluding storage of vehicles, equipment, or similar materials. (Ord. 10870 § 225, 1993).

21A.06.930 Public agency or utility office. Public agency or utility office: an office for the administration of any governmental or utility activity or program, with no outdoor storage and including, but not limited to uses located in SIC Major Group, Industry Group and Industry Nos.:

A. 91-Executive, Legislative, and General Government, except Finance;
B. 93-Public Finance, Taxation, and Monetary Policy;
C. 94-Administration of Human Resource Programs;
D. 95-Administration of Environmental Quality and Housing Program;
E. 96-Administration of Economic Programs;
F. 972-International Affairs;
G. 9222-Legal Counsel and Prosecution; and
H. 9229-Public Order and Safety. (Ord. 10870 § 226, 1993).

21A.06.935 Public agency or utility yard. Public agency or utility yard: a facility for open or enclosed storage, repair, and maintenance of vehicles, equipment, or related materials, excluding document storage. (Ord. 10870 § 227, 1993).

21A.06.940 Public agency training facility. Public agency training facility: an establishment or school for training state and local law enforcement, fire safety, national guard or transit personnel and facilities including but not limited to:

A. Dining and overnight accommodations;
B. Classrooms;
C. Shooting ranges;
D. Auto test tracks; and
E. Fire suppression simulations. (Ord. 10870 § 228, 1993).

21A06.942 Public road right-of-way structure. Public road right-of-way structure: the existing, maintained, improved road right-of-way, regional light rail transit or railroad or light rail transit prism and the roadway drainage features including ditches and the associated surface water conveyance system, flow control and water quality treatment facilities and other structures that are ancillary to those facilities including catch-basins, access holes and culverts. (Ord. 16985 § 118, 2010: Ord. 16267 § 16, 2008: Ord. 15051 § 86, 2004).

21A.06.943 Public transportation amenities. Public transportation amenities: transfer of development rights (TDR) amenities financed by public transportation funds that shall provide transportation improvement or programs. (Ord. 14190 § 26, 2001: Ord. 13733 § 1, 2000).

21A.06.944 Puget Sound counties. Puget Sound counties: the twelve counties that border the waters of Puget Sound. (Ord. 15032 § 8, 2004).

21A.06.944C Racetrack. Racetrack: an establishment offering services and uses located in:

A. SIC Industry No. 7948; or
B. A regional motor sports facility. (Ord. 17287 § 8, 2012).

21A.06.945 Radio frequency. Radio frequency: the number of times the current from a given source of non-ionizing electromagnetic radiation changes from a maximum positive level through a maximum negative level and back to a maximum positive level in one second; measured in cycles per second or Hertz ("Hz"). (Ord. 10870 § 229, 1993).

21A.06.950 Reasonable use. Reasonable use: a legal concept articulated by federal and state courts in regulatory taking cases. (Ord. 10870 § 230, 1993).

21A.06.955 Receiving site. Receiving site: land for which allowable residential density is increased over the base density permitted by the underlying zone, by virtue of permanently securing and dedicating to King County, or another qualifying agency, the development potential of an associated sending site. (Ord. 10870 § 231, 1993).

21A.06.957 Reclamation. Reclamation: the final grading and restoration of a site to reestablish the vegetative cover, soil stability and surface water conditions to accommodate and sustain all permitted uses of the site and to prevent and mitigate future environmental degradation. (Ord. 15051 § 87, 2004).

21A.06.958 Recreation, active. Recreation, active: structured individual or team activity that requires the use of special facilities, courses, fields or equipment. Active recreation requires a significant level of development, use and programming. Active

recreation includes, but is not limited to, organized sporting events, such as baseball, football, soccer, golf, hockey, tennis and skateboarding, and to large-scale group picnics, gatherings and social events. (Ord. 15606 § 8, 2006).

21A.06.9585 Recreation, passive. Recreation, passive: recreational activities that do not require prepared facilities like sports fields or pavilions. Passive recreational activities place minimal stress on a site's resources and are highly compatible with natural resource protection. Passive recreation include, but is not limited to, camping, hiking, wildlife viewing, observing and photographing nature, picnicking, walking, bird watching, historic and archaeological exploration, swimming, bicycling, running/jogging, climbing, horseback riding and fishing. (Ord. 15606 § 9, 2006).

21A.06.959 Recreation facilities, passive. Recreation facilities, passive: facilities to support passive recreation that do not involve significant levels of infrastructure or development, including, but not limited to, open fields, trails, children's play equipment and picnic sites for a small number of people. (Ord. 15606 § 10, 2006).

21A.06.960 Recreational vehicle ("RV"). Recreational vehicle ("RV"): a vehicle designed primarily for recreational camping, travel or seasonal use which has its own motive power or is mounted on or towed by another vehicle, including but not limited to:

A. Travel trailer;
B. Folding camping trailer;
C. Park trailer;
D. Truck camper;
E. Park trailer;
F. Motor home; and
G. Multi-use vehicle. (Ord. 10870 § 232, 1993).

21A.06.965 Recreational vehicle parks. Recreational vehicle parks: the use of land upon which two or more recreational vehicle sites, including hook up facilities, are located for occupancy by the general public of recreational vehicles as temporary living quarters for recreation or vacation purposes. (Ord. 10870 § 233, 1993).

21A.06.970 Recyclable material. Recyclable material: a non-toxic, recoverable substance that can be re-processed for the manufacture of new products. (Ord. 10870 § 234, 1993).

21A.06.971 Redesignation. Redesignation: a change in the shoreline environment designation by the procedures provided in K.C.C. chapter 20.18. (Ord. 16985 § 88, 2010: Ord. 3688 § 237, 1978. Formerly K.C.C. 25.08.400).

21A.06.972 Reference evapotranspiration (Eto). Reference evapotranspiration (Eto): a standard measurement of environmental parameters which affect the water use of plants. (Ord. 11210 § 33, 1994).

21A.06.973 Regional light rail transit. Regional light rail transit: A public rail transit line that operates at grade level, above grade level or in a tunnel and that provides high capacity, regional transit service owned or operated by a regional transit authority authorized under chapter 81.112 RCW. A regional light rail transit system may be designed to share a street right-of-way although it may also use a separate right-of-way. (Ord. 16985 § 117, 2010).

21A.06.973C Regional motor sports facility.

Regional motor sports facility. A racetrack established through a master planning demonstration project that may include only the following uses:

A. Motor vehicle racing and driving, subject to the conditions established by the master planning demonstration project, and shall not exceed the following racing surfaces:

1. A road course;
2. A kart course;
3. A motocross course;
4. Five-sixteenth-mile oval track; and
5. Up to two drag strips;

B. The following accessory uses, if authorized by the master planning demonstration project, shall be subject to the conditions established in the development and operating agreement:

1. Fire station;
2. Driving school; and
3. Police and fire safety training; and

C. Limited uses accessory to racing activities may be allowed. Any accessory uses shall be limited to racing and racing-related vehicle uses and shall be appurtenant to the facility by providing either a service or product only to the facility or require use of the facility in connection with the use. Assembly-line or mass production, including but not limited to vehicles and vehicle parts, permanent lodging facilities and general commercial, industrial and manufacturing uses are not permitted. Accessory uses are limited to the following:

1. On-site sale of racing- or event-related items;
2. Repair, service, modification or storage of motor vehicles used primarily at the facility;
3. Custom fabrication of racing motor vehicles, or vehicle parts to be incorporated into those vehicles, that will be used primarily at the facility;
4. Motor vehicle fuel sales for event participants;
5. Daycare for people employed at the facility and event participants and spectators;
6. Food service and concessions for event participants and spectators; and
7. Short-term recreational vehicle parking for persons attending or participating in events at the facility. (Ord. 17287 § 9, 2012).

21A.06.974 Regional road maintenance guidelines. Regional road maintenance guidelines: the National Marine Fisheries Service-published Regional Road Maintenance Endangered Species Act Program Guidelines. (Ord. 15051 § 88, 2004).

21A.06.980 Regional utility corridor. Regional utility corridor: a right-of-way tract or easement other than a street right-of-way which contains transmission lines or pipelines for utility companies. Right-of-way tracts or easements containing lines serving individual lots or developments are not regional utility corridors. (Ord. 10870 § 236, 1993).

21A.06.985 Relocatable facilities cost per student. Relocatable facilities cost per student: the estimated cost of purchasing and siting a relocatable facility in a school district for the grade span of school to be provided, as a function of the district's facilities

standard per grade span and taking into account the requirements of students with special needs. (Ord. 10870 § 237, 1993).

21A.06.990 Relocatable facility. Relocatable facility: any factory-built structure, transportable in one or more sections that is designed to be used as an education space and is needed to prevent the overbuilding of school facilities, to meet the needs of service areas within a district or to cover the gap between the time that families move into new residential developments and the date that construction is completed on permanent school facilities. (Ord. 10870 § 238, 1993).

21A.06.995 Relocation facilities. Relocation facilities: housing units within King County that provide housing to persons who have been involuntarily displaced from other housing units within King County as a result of conversion of their housing unit to other land uses. (Ord. 10870 § 239, 1993).

21A.06.997 Repair. Repair: to fix or restore to sound condition after damage. "Repair" does not include replacement of structures or systems. (Ord. 15051 § 90, 2004).

21A.06.998 Replace. Replace: to take or fill the place of a structure, fence, deck or paved surface with an equivalent or substitute structure, fence, deck or paved surface that serves the same purpose. "Replacement" may or may not involve an expansion. (Ord. 15051 § 91, 2004).

21A.06.1000 Restoration. Restoration: for purposes of critical areas regulation, an action that reestablishes the structure and functions of a critical area or any associated buffer that has been altered. (Ord. 15051 § 92, 2004: Ord. 10870 § 240, 1993).

21A.06.1002 Resource land tract. Resource land tract: a tract of land, created through a subdivision or short subdivision cluster development in the RA zone, that may be used as a working forest or farm. (Ord. 14045 § 9, 2001).

21A.06.1005 Retail, comparison. Retail, comparison: provides for the sale of comparison good and services and is centrally located in the community or region. (Ord. 10870 § 241, 1993).

21A.06.1010 Retail, convenience. Retail, convenience: provides for daily living goods, is easy to access and use and is close to residential neighborhoods. (Ord. 10870 § 242, 1993).

21A.06.10105 Retail nursery, garden center and farm supply store. Retail nursery, garden center and farm supply store: an establishment primarily engaged in retailing to the general public:

A. Trees, shrubs, other plants, seeds, bulbs, mulches, soil conditioners, fertilizers, pesticides, garden tools, landscaping materials and other garden supplies; and

B. Animal feeds, fertilizers, agricultural chemicals, pesticides, seeds and other farm supplies. (Ord. 15974 § 4, 2007).

21A.06.1011 Retaining wall. Retaining wall: any wall used to resist the lateral displacement of any material. (Ord. 12987 § 2, 1998).

21A.06.1011A Road amenities. Road amenities: transfer of development rights (TDR) amenities financed by road CIP or operating funds that shall provide transportation improvements or programs. (Ord. 14190 § 27, 2001: Ord. 13733 § 2, 2000).

21A.06.1011C Roadway. Roadway: the maintained areas cleared and graded within a road right-of-way or railroad prism. For a road right-of-way, "roadway" includes all maintained and traveled areas, shoulders, pathways, sidewalks, ditches and cut and fill slopes. For a railroad prism, "roadway" includes the maintained railbed, shoulders, and cut and fill slopes. "Roadway" is equivalent to the "existing, maintained, improved road right-of-way or railroad prism" as defined in the regional road maintenance guidelines. (Ord. 15051 § 93, 2004).

21A.06.1012 Runoff. Runoff: water not absorbed by the soil in the landscape area to which it is applied. (Ord. 11210 § 34, 1994).

21A.06.1013 Rural equestrian community trail. Rural equestrian community trail: an existing trail within the Equestrian Community located in the A, F or RA zones that has historically been used by the public for riding horses, and that may also have historically been used by or is suitable for use by other non-motorized trail users. (Ord. 17841 § 19, 2014: Ord. 14045 § 7, 2001).

21A.06.1014 Rural forest focus areas. Rural forest focus areas: Mapped geographic areas where special efforts to maintain forest cover and the practice of sustainable forestry are warranted. (Ord. 14045 § 8, 2001).

21A.06.1014F Rural public infrastructure maintenance facility. Rural public infrastructure maintenance facility: a facility operated by a public agency primarily for the maintenance of public roads, parks, regional trails and other public infrastructure located outside of the urban growth area. Uses within the facility may include the following, if primarily devoted to rural public infrastructure maintenance:

A. Public agency office;
B. Public agency yard;
C. Materials processing facility;
D. Vactor waste receiving facility;
E. Sand and gravel extraction;
F. Soil recycling; and
G. Renewable energy facilities, such as solar panels and wind turbines. (Ord. 15938 § 1, 2007).

21A.06.1015 Salmonid. Salmonid: a member of the fish family Salmonidae, including, but not limited to:

A. Chinook, coho, chum, sockeye and pink salmon;
B. Rainbow, steelhead and cutthroat salmon, which are also known as trout;
C. Brown trout;
D. Brook, bull trout, which is also known as char, and Dolly Varden char;
E. Kokanee; and
F. Pygmy whitefish. (Ord. 15051 § 94, 2004: Ord. 10870 § 243, 1993).

21A.06.1020 School bus base. School bus base: an establishment for the storage, dispatch, repair and maintenance of coaches and other vehicles of a school transit system. (Ord. 10870 § 244, 1993).

21A.06.1025 School district. School district: any school district in King County whose boundaries include unincorporated areas of the county. (Ord. 10870 § 245, 1993).

21A.06.1030 School district support facility. School district support facility: uses (excluding schools and bus bases) that are required for the operation of a school district. This term includes school district administrative offices, centralized kitchens, and maintenance or storage facilities. (Ord. 10870 § 246, 1993).

21A.06.1035 Schools, elementary, and middle/junior high. Schools, elementary, and middle/junior high: public or private institutions of learning offering instruction in the several branches of learning and study required by the Education Code of the State of Washington in grades kindergarten through nine, including associated meeting rooms, auditoriums and athletic facilities. (Ord. 17191 § 26, 2011: Ord. 10870 § 247, 1993).

21A.06.1040 Schools, secondary or high school. Schools, secondary or high school: public or private institutions of learning offering instruction in the several branches of learning and study required by the Education Code of the State of Washington in grades nine through twelve, including associated meeting rooms, auditoriums and athletic facilities. (Ord. 17191 § 27, 2011: Ord. 10870 § 248, 1993).

21A.06.1043 Secure community transition facility ("SCTF"). Secure community transition facility ("SCFT"): A facility for persons civilly committed and conditionally released to a less restrictive alternative in accordance with chapter 71.09 RCW. A secure community transition facility has supervision and security, and either provides or ensures the provision of sex offender treatment services. (Ord. 14503 § 2, 2002).

21A.06.1045 Seismic hazard area. Seismic hazard area: an area subject to severe risk of earthquake damage from seismically induced settlement or lateral spreading as a result of soil liquefaction in an area underlain by cohesionless soils of low density and usually in association with a shallow groundwater table. (Ord. 15051 § 95, 2004: Ord. 10870 § 249, 1993).

21A.06.1050 Self-service storage facility. Self-service storage facility: an establishment containing separate storage spaces that are leased or rented as individual units. (Ord. 10870 § 250, 1993).

21A.06.1055 Sending site. Sending site: land designated in K.C.C. 21A.36 as capable of providing a public benefit if permanently protected by virtue of having its zoned development potential transferred to another property. (Ord. 10870 § 251, 1993).

21A.06.1060 Senior citizen. Senior citizen: a person aged 62 or older. (Ord. 11157 § 8, 1993: Ord. 10870 § 252, 1993).

21A.06.1062 Senior citizen assisted housing. Senior citizen assisted housing: housing in a building consisting of two or more dwelling units or sleeping units restricted to occupancy by at least one senior citizen per unit, and may include the following support services, as deemed necessary:

A. Food preparation and dining areas;

B. Group activity areas;
C. Medical supervision; and
D. Similar activities. (Ord. 11157 § 9, 1993: Ord. 10870 § 634 (part), 1993 [Originally Ord. 10870 § 112]).

21A.06.1070 Setback. Setback: the minimum required distance between a structure and a specified line such as a lot, easement or buffer line that is required to remain free of structures. (Ord. 10870 § 254, 1993).

21A.06.1075 Shelters for temporary placement. Shelters for temporary placement: housing units within King County that provide housing to persons on a temporary basis for a duration not to exceed four weeks. (Ord. 10870 § 255, 1993).

21A.06.1080 Shooting range. Shooting range: a facility designed to provide a confined space for safe target practice with firearms, archery equipment, or other weapons. (Ord. 10870 § 256, 1993).

21A.06.1081 Shorelands. Shorelands: areas landward of the ordinary high water mark along shorelines extending landward two hundred feet, and also including:
A. The one hundred year floodplain;
B. All associated wetlands; and
C. All river deltas. (Ord. 16985 § 89, 2010).

21A.06.1082 Shoreline. Shoreline: those lands defined as shorelines of the state in the Shorelines Management Act of 1971, chapter 90.58 RCW. (Ord. 15051 § 97, 2004).

21A.06.1082A Shoreline management conditional use. Shoreline conditional use: a shoreline use that is allowed only if it meets the criteria established in K.C.C. 25.32.050, as recodified by Ordinance 16985*, and is subject to conditions of approval. (Ord. 16985 § 91, 2010: Ord. 3688 § 247, 1978. Formerly K.C.C. 25.08.460).

***Reviser's note: K.C.C. 25.32.080 was repealed by Ordinance 16985, Section 137.**

21A.06.1082B Shoreline jurisdiction. Shoreline jurisdiction: shorelines and shorelands in unincorporated King County. (Ord. 16985 § 92, 2010).

21A.06.1082C Shoreline protection. Shoreline stabilization: a structure or device, including, but not limited to, breakwaters, bulkheads, jetties, groins and riprap, that is placed so as to prevent erosion or to alter the normal currents, wave actions or other natural forces or actions of a waterbody. Shoreline stabilization does not include flood protection facilities. (Ord. 16985 § 94, 2010: Ord. 3688 § 251, 1978. Formerly K.C.C. 25.08.480).

21A.06.1082D Shoreline variance. Shoreline variance: an adjustment in the application of the regulations of the shoreline management master program consistent with WAC [173-14]* and K.C.C. 21A.44.090. (Ord. 16985 § 96, 2010: Ord. 3688 § 248, 1978. Formerly K.C.C. 25.08.470).

***Reviser's note: This language was changed to 173-27-170 in Ordinance 16985, Section 96, but the changes were not indicated as required under K.C.C. 1.24.075.**

21A.06.1083 Shorelines. Shorelines: all marine waters, lakes greater than twenty acres and rivers and streams with a minimum of twenty cubic feet per second mean annual flow. (Ord. 16985 § 98, 2010: Ord. 3688 § 246, 1978. Formerly K.C.C. 25.08.490).

21A.06.1083A Shorelines of statewide significance. Shorelines of statewide significance: those shorelines described in RCW 90.58.030(2)(e) that are within the unincorporated portion of King County. (Ord. 16985 § 100, 2010: Ord. 3688 § 249, 1978. Formerly K.C.C. 25.08.510).

21A.06.1084 Side channel. Side channel: a channel that is secondary to and carries water to or from the main channel of a stream or the main body of a lake or estuary, including a back-watered channel or area and oxbow channel that is still connected to a stream by one or more aboveground channel connections or by inundation at the base flood. (Ord. 15051 § 98, 2004).

21A.06.1085 Sign. Sign: any device, structure, fixture, or placard that is visible from a public right-of-way or surrounding properties and uses graphics, symbols, or written copy for the purpose of advertising or identifying any establishment, product, goods, or service. (Ord. 10870 § 257, 1993).

21A.06.1090 Sign, awning. Sign, awning: a sign painted on or attached directly to and supported by an awning. An awning may be constructed of rigid or non-rigid materials and may be retractable or non-retractable. (Ord. 13014 § 1, 1998: Ord. 10870 § 258, 1993).

21A.06.1095 Sign, changing message center. Sign, changing message center: an electrically controlled sign that contains advertising messages that changes more frequently than once every three minutes. (Ord. 16267 § 15, 2008: Ord. 10870 § 259, 1993).

21A.06.1100 Sign, community bulletin board. Sign, community bulletin board: a permanent sign used to notify the public of community events and public services, and which contains no commercial advertising. (Ord. 10870 § 260, 1993).

21A.06.1105 Sign, directional. Sign, directional: a sign designed to guide or direct pedestrian or vehicular traffic to an area, place or convenience, and may include incidental graphics such as trade names and trademarks. (Ord. 10870 § 261, 1993).

21A.06.1110 Sign, freestanding. Sign, freestanding: a sign standing directly upon the ground or having one or more supports standing directly upon the ground, and being detached from any building or fence. (Ord. 10870 § 262, 1993).

21A.06.1115 Sign, fuel price. Sign, fuel price: a sign utilized to advertise the price of gasoline and/or diesel fuel. (Ord. 10870 § 263, 1993).

21A.06.1120 Sign, incidental. Sign, incidental: a sign, emblem or decal designed to inform the public of goods, facilities, or services available on the premises, and may include but not limited to signs designating:

A. Restrooms;

B. Hours of operation;
C. Acceptable credit cards;
D. Property ownership or management;
E. Phone booths; and
F. Recycling containers. (Ord. 10870 § 264, 1993).

21A.06.1125 Sign, indirectly illuminated. Sign, indirectly illuminated: a sign that is illuminated entirely from an external artificial source. (Ord. 10870 § 265, 1993).

21A.06.1130 Sign, monument. Sign, monument: a freestanding sign that is above ground level and is anchored to the ground by a solid base, with no open space between the sign and the ground. (Ord. 10870 § 266, 1993).

21A.06.1135 Sign, off-premise directional. Sign, off-premise directional: a sign which contains no advertising of a commercial nature which is used to direct pedestrian or vehicular traffic circulation to a facility, service or business located on other premises within six hundred and sixty feet of the sign. (Ord. 10870 § 267, 1993).

21A.06.1140 Sign, on-premise. Sign, on-premise: a sign which displays a message which is incidental to and directly associated with the use of the property on which it is located. (Ord. 10870 § 268, 1993).

21A.06.1145 Sign, permanent residential development identification. Sign, permanent residential development identification: a permanent sign identifying the residential development upon which the sign is located. (Ord. 10870 § 269, 1993).

21A.06.1150 Sign, portable. Sign, portable: a sign which is capable of being moved and is not permanently affixed to the ground, a structure or building. (Ord. 10870 § 270, 1993).

21A.06.1155 Sign, projecting. Sign, projecting: any sign which is attached to and supported by the exterior wall of a building with the exposed face of the sign on a plane perpendicular to the wall of the building; projecting more than one foot from the wall of a building and vertical to the ground. (Ord. 13014 § 2, 1998: Ord. 10870 § 271, 1993).

21A.06.1160 Sign, time and temperature. Sign, time and temperature: an electrically controlled sign that contains messages for date, time, and temperature, which changes at intervals of one minute or less. (Ord. 10870 § 272, 1993).

21A.06.1165 Sign, wall. Sign, wall: any sign painted on, or attached directly to and supported by, a building or structure; with the exposed face of the sign on a plane parallel to the portion of the building or structure to which it is attached; projecting no more than one foot from the building or structure; including window signs which are permanently attached. (Ord. 13014 § 3, 1998: Ord. 10870 § 273, 1993).

21A.06.1167 Significant tree: an existing healthy tree that is not a hazard tree (i.e. a tree that does not have a high probability of imminently falling due to a debilitating disease or structural defect) and that, when measured four and one-half feet above grade, has a minimum diameter of:
A. Eight inches for evergreen trees; or
B. Twelve inches for deciduous trees. (Ord. 13576 § 1, 1999).

21A.06.1170 Site. Site: A single lot, or two or more contiguous lots that are under common ownership or documented legal control, used as a single parcel for a development proposal in order to calculate compliance with the standards and regulations of this title. (Ord. 11922 § 2, 1995).

21A.06.1172 Site area. Site area: the total horizontal area of a project site. (Ord. 15051 § 99, 2004: Ord. 11555 § 1, 1994).

21A.06.1175 Site cost per student. Site cost per student: the estimated cost of a site in the district for the grade span of school to be provided, as a function of the district's facilities standard per grade span and taking into account the requirements of students with special needs. (Ord. 10870 § 275, 1993).

21A.06.1180 Ski area. Ski area: an establishment for cross-country or downhill ski runs and including, but not limited to:

A. Chair lifts;
B. Warming huts; and
C. Supporting services. (Ord. 10870 § 276, 1993).

21A.06.1182 Slope. Slope: an inclined ground surface, the inclination of which is expressed as a ratio of horizontal distance to vertical distance. (Ord. 16267 § 17, 2008: Ord. 15051 § 100, 2004).

21A.06.1185 Soil recycling facility. Soil recycling facility: an establishment engaged in the collection, storage and treatment of contaminated soils to remove and reuse organic contaminants. (Ord. 10870 § 277, 1993).

21A.06.1190 Source-separated organic material. Source-separated organic material: vegetative material, scrap lumber or wood, or other materials that provide a source for recycled or composted products. This does not include chemically treated wood products and/or toxic organic substances. (Ord. 10870 § 278, 1993).

21A.06.1195 Special use permit. Special use permit: a permit granted by the County to locate a regional land use at a particular location, subject to conditions placed on the proposed use to ensure compatibility with adjacent land uses. (Ord. 10870 § 279, 1993).

21A.06.1200 Specialized instruction school. Specialized instruction school: establishments engaged in providing specialized instruction in a designated field of study, rather than a full range of courses in unrelated areas; including, but not limited to:

A. Art;
B. Dance;
C. Music;
D. Cooking; and
E. Driving. (Ord. 15032 § 9, 2004: Ord. 10870 § 280, 1993).

21A.06.1205 Specified sexual activities. Specified sexual activities: human genitalia in a state of sexual stimulation or arousal; acts of human masturbation, sexual intercourse or sodomy; or erotic fondling, touching or display of human genitalia, pubic region, buttock, or female breast. (Ord. 10870 § 281, 1993).

21A.06.1210 Sporting goods store. Sporting goods store: an establishment engaged in the retail sale of sporting goods and equipment, including only uses located in SIC Industry Nos.:

A. 5941-Sporting Goods Stores and Bicycle Shops; and

B. 5999-Tent Shops and Trophy Shops. (Ord. 10870 § 282, 1993).

21A.06.1215 Sports club. Sports club: an establishment engaged in operating physical fitness facilities and sports and recreation clubs, including only uses located in SIC Industry Nos.:

A. 7991-Physical Fitness Facilities; and

B. 7997-Membership Sports and Recreation Clubs. (Ord. 10870 § 283, 1993).

21A.06.1220 Stable. Stable: a structure or facility in which horses or other livestock are kept for:

A. Boarding;

B. Training;

C. Riding lessons;

D. Breeding;

E. Rental; or

F. Personal use. (Ord. 10870 § 284, 1993).

21A.06.1225 Standard of service, school districts. Standard of service, school districts: the standard adopted by each school district which identifies the program year, the class size by grade span and taking into account the requirements of students with special needs, the number of classrooms, the types of facilities the district believes will best serve its student population, and other factors as identified by the school district. The district's standard of service shall not be adjusted for any portion of the classrooms housed in relocatable facilities which are used as transitional facilities or for any specialized facilities housed in relocatable facilities. Except as otherwise defined by the school board pursuant to a board resolution, transitional facilities shall mean those facilities that are used to cover the time required for the construction of permanent facilities; provided that, the "necessary financial commitments" as defined in Section 21A.28 are in place to complete the permanent facilities called for in the capital plan. (Ord. 10870 § 285, 1993).

21A.06.1230 Steep slope hazard area. Steep slope hazard area: an area on a slope of forty percent inclination or more within a vertical elevation change of at least ten feet. For the purpose of this definition, a slope is delineated by establishing its toe and top and is measured by averaging the inclination over at least ten feet of vertical relief. Also for the purpose of this definition:

A. The "toe" of a slope means a distinct topographic break in slope that separates slopes inclined at less than forty percent from slopes inclined at forty percent or more. Where no distinct break exists, the "toe" of a slope is the lower most limit of the area where the ground surface drops ten feet or more vertically within a horizontal distance of twenty five feet; and

B. The "top" of a slope is a distinct topographic break in slope that separates slopes inclined at less than forty percent from slopes inclined at forty percent or more. Where no distinct break exists, the "top" of a slope is the upper-most limit of the area where the ground surface drops ten feet or more vertically within a horizontal distance of twenty-five feet. (Ord. 15051 § 101, 2004: Ord. 10870 § 286, 1993).

21A.06.1235 Stream functions. Stream functions: natural processes performed by streams including functions which are important in facilitating food chain production, providing habitat for nesting, rearing and resting sites for aquatic, terrestrial and avian species, maintaining the availability and quality of water, such as purifying water, acting as recharge and discharge areas for groundwater aquifers, moderating surface and storm water flows and maintaining the free flowing conveyance of water, sediments and other organic matter. (Ord. 10870 § 287, 1993).

21A.06.1240 Stream. Stream: an aquatic area where surface water produces a channel, not including a wholly artificial channel, unless it is:

A. Used by salmonids; or

B. Used to convey a stream that occurred naturally before construction of the artificial channel. (Ord. 15051 § 102, 2004: Ord. 10870 § 288, 1993).

21A.06.1245 Street. Street: a public or recorded private thoroughfare providing pedestrian and vehicular access through neighborhoods and communities and to abutting property. (Ord. 10870 § 289, 1993).

21A.06.1250 Street frontage. Street frontage: any portion of a lot or combination of lots which directly abut a public right-of-way. (Ord. 10870 § 290, 1993).

21A.06.1255 Structure. Structure: anything permanently constructed in or on the ground, or over the water; excluding fences six feet or less in height, decks less than 18 inches above grade, paved areas, and structural or non-structural fill. (Ord. 12987 § 3, 1998: Ord. 10870 § 291, 1993).

21A.06.1260 Student factor. Student factor: the number derived by a school district to describe how many students of each grade span are expected to be generated by a dwelling unit. Student factors shall be based on district records of average actual student generated rates for new developments constructed over a period of not more than five years prior to the date of the fee calculation; if such information is not available in the district, data from adjacent districts, districts with similar demographics, or county wide averages must be used. Student factors must be separately determined for single family and multifamily dwelling units, and for grade spans. (Ord. 10870 § 292, 1993).

21A.06.1263 Subdivision or residential subdivision. Subdivision or residential subdivision: Unless the context clearly indicates otherwise, includes a subdivision as defined in K.C.C. 19A.04.320 and a short subdivision as defined K.C.C. 19A.04.310. (Ord. 17191 § 28, 2011: Ord. 16950 § 13, 2010).

21A.06.1265 Submerged land. Submerged land: any land at or below the ordinary high water mark of an aquatic area. (Ord. 15051 § 103, 2004: Ord. 10870 § 293, 1993).

21A.06.1268 Substantial development. Substantial development: any development that requires a shoreline management substantial development permit, as defined in RCW 90.58.030(3)(e). (Ord. 16985 § 102, 2010: Ord. 3688 § 255, 1978. Formerly K.C.C. 25.08.570).

21A.06.1270 Substantial improvement. Substantial improvement:

A.1. Any maintenance, repair, structural modification, addition or other improvement of a structure, the cost of which equals or exceeds fifty percent of the market value of the structure either:

a. before the improvement or repair is started; or

b. if the structure has been damaged and is being restored, before the damage occurred.

2. For purposes of this definition, the cost of any improvement is considered to begin when the first alteration of any wall, ceiling, floor or other structural part of the building begins, whether or not that alteration affects the external dimensions of the structure; and

B. Does not include either:

1. Any projects for improvement of a structure for purposes of flood mitigation, including but not limited to elevating a structure to the base flood elevation, or to correct existing violations of state or local health, sanitary or safety code specifications that have been identified by the local code enforcement official and that are the minimum necessary to ensure safe living conditions; or

2. any alteration of a structure listed on the national Register of Historic Places or a state or local inventory of historic resources. (Ord. 17191 § 29, 2011: Ord. 15051 § 104, 2004: Ord. 10870 § 294, 1993).

21A.06.1271 Surface water conveyance. Surface water conveyance: a drainage facility designed to collect, contain and provide for the flow of surface water from the highest point on a development site to receiving water or another discharge point, connecting any required flow control and water quality treatment facilities along the way. "Surface water conveyance" includes but is not limited to, gutters, ditches, pipes, biofiltration swales and channels. (Ord. 15051 § 105, 2004).

21A.06.1272 Surface water discharge. Surface water discharge: the flow of surface water into receiving water or another discharge point. (Ord. 15051 § 106, 2004).

21A.06.1273 TDR. TDR transfer of development rights. (Ord. 14190 § 28, 2001: Ord. 13733 § 3, 2000).

21A.06.1273A TDR amenities. TDR amenities: improvements or programs that are implemented to facilitate increased densities on or near receiving sites inside cities or in the urban unincorporated area. (Ord. 14190 § 29, 2001: Ord. 13733 § 4, 2000).

21A.06.1273B TDR bank fund. TDR bank fund: the fund established under K.C.C. 4.08.327*. (Ord. 14190 § 30, 2001: Ord. 13733 § 5, 2000).

***Reviser's note: K.C.C.4.08.327 was recodified as K.C.C. 4A.200.730 and renamed the transfer of development rights bank fund by Ordinance 17527.**

21A.06.1273C TDR conversion ratio. TDR conversion ratio: the ratio by which development rights purchased from a sending site are converted into additional development capacity for use on a receiving site. (Ord. 14190 § 31, 2001: Ord. 13733 § 6, 2000).

21A.06.1273D TDR executive board. TDR executive board: the board established K.C.C. chapter 21A.37. (Ord. 14190 § 32, 2001: Ord. 13733 § 7, 2000).

21A.06.1274 TDR extinguishment document. TDR extinguishment document: a document prepared by King County and signed and recorded by the owner of transfer of development rights (TDR) that documents the transfer of development rights from one property to another and permanently prohibits any future use of these rights. (Ord. 14190 § 20, 2001).

21A.06.1274A Temporary farm worker housing. Temporary farm worker housing: a place, area or piece of land, where sleeping places or housing sites are provided for temporary, seasonal occupancy by an agricultural employer for the employer's agricultural employees or by another person who is providing such accommodations for agricultural employees. (Ord. 17539 § 24, 2013).

21A.06.1275 Temporary use permit. Temporary use permit: permit to allow a use of limited duration and/or frequency, or to allow multiple related events over a specified period. (Ord. 10870 § 295, 1993).

21A.06.1277 Theater. Theater: an establishment primarily engaged in the indoor exhibition of motion pictures or of live theatrical presentations. (Ord. 13022 § 5, 1998).

21A.06.1278 Theatrical production services. Theatrical production services: an establishment engaged in uses located in SIC Industry No. 792 - Theatrical Producers (Except Motion Picture), Bands, Orchestras, and Entertainers, except establishments primarily engaged in providing live theatrical presentations, such as road companies and summer theaters. (Ord. 13022 § 6, 1998).

21A.06.1280 Tightline sewer. Tightline sewer: a sewer trunk line designed and intended specifically to serve only a particular facility or place, and whose pipe diameter should be sized appropriately to ensure service only to that facility or place. It may occur outside the local service area for sewers, but does not amend the local service area. (Ord. 10870 § 296, 1993).

21A.06.1285 Trails. Trails: man-made pathways designed and intended for use by pedestrians, bicyclists, equestrians, and other nonmotorized recreational users. (Ord. 16267 § 18, 2008: Ord. 10870 § 297, 1993).

21A.06.1290 Transfer station. Transfer station: a staffed collection and transportation facility used by private individuals and route collection vehicles to deposit solid waste collected off-site into larger transfer vehicles for transport to permanent disposal sites; and may also include recycling facilities involving collection or processing for shipment. (Ord. 10870 § 298, 1993).

21A.06.1295 Transit base. Transit base: an establishment for the storage, dispatch, repair and maintenance of coaches, light rail trains, and other vehicles of a public transit system. (Ord. 10870 § 299, 1993).

21A.06.1305 Transitional housing facilities. Transitional housing facilities: housing units within King County owned by public housing authorities, nonprofit organizations or other public interest groups that provide housing to persons on a temporary basis for a duration not to exceed 24 months in conjunction with job training, self sufficiency training, and human services counseling; the purpose of which is to help

persons make the transition from homelessness to placement in permanent housing. (Ord. 10870 § 301, 1993).

21A.06.1310 Transmission equipment. Transmission equipment: equipment, such as antennae and satellite, or point-to-point microwave dishes, that transmit or receive radio signals. (Ord. 10870 § 302, 1993).

21A.06.1315 Transmission line booster station. Transmission line booster station: an establishment containing equipment designed to increase voltage of electrical power transported through transmission and/or distribution lines to compensate for power loss due to resistance. (Ord. 10870 § 303, 1993).

21A.06.1320 Transmission support structure. Transmission support structure: a pole or lattice-work structure specifically designed and intended to support antenna and related communication equipment. The term does not include poles or lattice-work towers supporting above-ground distribution or transmission lines for utility services such as electric, telephone, cable, etc. (Ord. 13129 § 19, 1998: Ord. 10870 § 304, 1993).

21A.06.1325 Transmitter building. Transmitter building: building used to contain communication transmission equipment. (Ord. 10870 § 305, 1993).

21A.06.1330 Transportation system management ("TSM"). Transportation System Management ("TSM"): low-cost projects that can be implemented in a short time frame designed to increase the efficiency of existing transportation facilities. This also includes transit and/or ride sharing measures to decrease single occupancy vehicle trips. (Ord. 10870 § 306, 1993).

21A.06.1331 Tree, hazard. Tree, hazard: any tree with a structural defect, combination of defects or disease resulting in structural defect that, under the normal range of environmental conditions at the site, will result in the loss of a major structural component of that tree in a manner that will:

A. Damage a residential structure or accessory structure, place of employment or public assembly or approved parking for a residential structure or accessory structure or place of employment or public assembly;

B. Damage an approved road or utility facility; or

C. Prevent emergency access in the case of medical hardship. (Ord. 15051 § 107, 2004).

21A.06.1332 Trough subsidence. Trough subsidence: a readily predictable or historically observed surface depression phenomena caused by coal extraction which is generally characterized by a gentle and continuous dish shape which may extend beyond the subsurface area in which coal mining has occurred. (Ord. 13319 § 5, 1998).

21A.06.1335 Ultimate roadway section. Ultimate roadway section: a designation by King County that the maximum roadway or intersection capacity has been reached and further right-of-way acquisition and/or improvements are not feasible to increase peak hour vehicle capacity. (Ord. 10870 § 307, 1993).

21A.06.1340 Urban Plan Development (UPD). Urban Plan Development: a site specific project consisting of conceptual site plan(s), development standards, processing and other elements. (Ord. 10870 § 308, 1993).

21A.06.1345 Use. Use: the purpose for which land or a structure is designed, built, arranged, intended, occupied, maintained, let or leased. (Ord. 17841 § 20, 2014: Ord. 10870 § 309, 1993).

21A.06.1347 Use, established. Use, established: a use that has been in continuous operation for more than sixty days and that conformed to King County's rules and regulations and to other applicable local and state rules and regulations at the time it began operation and throughout the sixty days. (Ord. 17841 § 21, 2014).

21A.06.1348 Utility corridor. Utility corridor: a narrow strip of land containing underground or above-ground utilities and the area necessary to maintain those utilities. A "utility corridor" is contained within and is a portion of any utility right-of-way or dedicated easement. (Ord. 15051 § 108, 2004).

21A.06.1350 Utility facility. Utility facility: a facility for the distribution or transmission of services, including:

A. Telephone exchanges;

B. Water pipelines, pumping or treatment stations;

C. Electrical substations;

D. Water storage reservoirs or tanks;

E. Municipal groundwater well-fields;

F. Regional surface water flow control and water quality facilities;

G. Natural gas pipelines, gate stations and limiting stations;

H. Propane, compressed natural gas and liquefied natural gas storage tanks serving multiple lots or uses from which fuel is distributed directly to individual users;

I. Wastewater pipelines, lift stations, pump stations, regulator stations or odor control facilities; and

J. Communication cables, electrical wires and associated structural supports. (Ord. 15051 § 109, 2004: Ord. 10870 § 310, 1993).

21A.06.1352 Vactor waste. Vactor waste means liquid or solid waste material collected from catch basins, retention/detention facilities or drainage pipes. (Ord. 12018 § 1, 1995).

21A.06.1353 Vactor waste receiving facility. Vactor waste receiving facility means a facility where vactor waste is brought for treatment and storage prior to final disposal. (Ord. 12018 § 2, 1995).

21A.06.1355 Variance. Variance: an adjustment in the application of standards of a zoning code to a particular property. (Ord. 10870 § 311, 1993).

21A.06.1360 Vegetation. Vegetation: any and all plant life growing at, below or above the soil surface. (Ord. 10870 § 312, 1993).

21A.06.1365 Vocational school. Vocational school: establishments offering training in a skill or trade to be pursued as a career, including only uses located in SIC Industry Group No.:

A. 824-Vocational Schools; and

B. 8222-Technical Institutes. (Ord. 10870 § 313, 1993).

21A.06.1370 Volcanic hazard area. Volcanic hazard area: an area subject to inundation by mudflows, lahars or related flooding resulting from volcanic activity on Mount Rainier, delineated based on recurrence of an event equal in magnitude to the prehistoric Electron mudflow. (Ord. 15051 § 110, 2004: Ord. 10870 § 314, 1993).

21A.06.1375 Warehousing and wholesale trade. Warehousing and wholesale trade: establishments involved in the storage and/or sale of bulk goods for resale or assembly, excluding establishments offering the sale of bulk goods to the general public which is classified as a retail use in K.C.C. 21A.08.070. These establishments shall include only SIC Major Group Nos. 50 and 51 and SIC Industry Group Nos. 422 and 423. (Ord. 10870 § 315, 1993).

21A.06.1380 Wastewater treatment facility. Wastewater treatment facility: a plant for collection, decontamination and disposal of sewage, including residential, industrial and agricultural liquid wastes, and including any physical improvement within the scope of the definition of "water pollution control facility" set forth in WAC 173-90-015(4) as amended. (Ord. 10870 § 316, 1993).

21A.06.1382 Water budget. Water budget: the upper limit of irrigation water applied to the established landscape area. (Ord. 11210 § 35, 1994).

21A.06.1385 Water dependent use. Water dependent use: a use or portion of a use that cannot exist in location that is dependent on the water by reason of the intrinsic nature of its operations. (Ord. 17485 § 16, 2012: Ord. 10870 § 317, 1993).

21A.06.1386 Water enjoyment use. Water enjoyment use: a recreational use or other use that facilitates public access to the shoreline as a primary characteristic of the use; or a use that provides for recreational use or aesthetic enjoyment of the shoreline for a substantial number of people as a general characteristic of the use and which through location, design and operation ensures the public's ability to enjoy the physical and aesthetic qualities of the shoreline. A water enjoyment use must be open to the general public and the shoreline-oriented space within the project must be devoted to the specific aspects of the use that fosters shoreline enjoyment. (Ord. 16985 § 105, 2010).

21A.06.1388 Water oriented use. Water oriented use: a use that is water dependent, water related or water enjoyment, or a combination of such uses. (Ord. 16985 § 106, 2010).

21A.06.1389 Water related use. Water related use: a use or portion of a use that is not intrinsically dependent on a waterfront location but whose economic viability is dependent upon a waterfront location because:

A. The use has functional requirement for a waterfront location, such as the arrival or shipment of materials by water or the need for large quantities of water; or

B. The use provides a necessary service supportive of the water-dependent uses and the proximity of the use to its customers makes it services less expensive or more convenient, or both. (Ord. 16985 § 108, 2010: Ord. 3688 § 258, 1978. Formerly K.C.C. 25.08.600).

21A.06.1390 Wet meadow, grazed or tilled. Wet meadow, grazed or tilled: an emergent wetland that has grasses, sedges, rushes or other herbaceous vegetation as its

predominant vegetation and has been previously converted to agricultural activities. (Ord. 15051 § 111, 2004: Ord. 10870 § 318, 1993).

21A.06.1391 Wetland. Wetland: an area that is not an aquatic area and that is inundated or saturated by ground or surface water at a frequency and duration sufficient to support, and under normal circumstances supports, a prevalence of vegetation typically adapted for life in saturated soil conditions. For purposes of this definition:

A. Wetlands shall be delineated using the wetland delineation manual required by RCW 36.70A.175; and

B. Except for artificial features intentionally made for the purpose of mitigation, "wetland" does not include an artificial feature made from a nonwetland area, which may include, but is not limited to:

1. A surface water conveyance for drainage or irrigation;
2. A grass-lined swale;
3. A canal;
4. A flow control facility;
5. A wastewater treatment facility;
6. A farm pond;
7. A wetpond;
8. Landscape amenities; or
9. A wetland created after July 1, 1990, that was unintentionally made as a result of construction of a road, street or highway. (Ord. 16985 § 119, 2010: Ord. 15051 § 119, 2004: Ord. 12122 § 1, 1996: Ord. 11621 § 34, 1994: 10870 § 323, 1993).

21A.06.1392 Wetland complex. Wetland complex: a grouping of two or more wetlands, not including grazed wet meadows, that meet the following criteria:

A. Each wetland included in the complex is within five hundred feet of the delineated edge of at least one other wetland in the complex;

B. The complex includes at least:

1. one wetland classified category I or II;
2. three wetlands classified category III; or
3. four wetlands classified category IV;

C. The area between each wetland and at least one other wetland in the complex is predominately vegetated with shrubs and trees; and

D. There are not any barriers to migration or dispersal of amphibian, reptile or mammal species that are commonly recognized to exclusively or partially use wetlands and wetland buffers during a critical life cycle stage, such as breeding, rearing or feeding. (Ord. 15051 § 112, 2004).

21A.06.1393 Wetland creation. Wetland creation: For purposes of wetland mitigation, the manipulation of the physical, chemical or biological characteristics present to develop a wetland on an upland or deepwater site, where a wetland did not previously exist. Activities to create a wetland typically involve excavation of upland soils to elevations that will produce a wetland hydroperiod, create hydric soils and support the growth of hydrophytic plant species. Wetland creation results in a gain in wetland acres. (Ord. 15051 § 113, 2004).

21A.06.1395 Wetland edge. Wetland edge: the line delineating the outer edge of a wetland, consistent with the wetland delineation manual required by RCW 36.70A.175. (Ord. 15051 § 114, 2004: Ord. 11977 § 1, 1995: Ord. 10870 § 319, 1993).

21A.06.1397 Wetland enhancement. Wetland enhancement: The manipulation of the physical, chemical, or biological characteristics of a wetland site to heighten, intensify or improve specific functions or to change the growth state or composition of the vegetation present. Enhancement is undertaken for specified purposes such as water quality improvement, flood water retention or wildlife habitat. Wetland enhancement activities typically consist of planting vegetation, controlling nonnative or invasive species, modifying site elevations or the proportion of open water to influence hydroperiods or some combination of these. Wetland enhancement results in a change in some wetland functions and can lead to a decline in other wetland functions, but does not result in a gain in wetland acres. (Ord. 15051 § 115, 2004).

21A.06.1400 Wetland, forested. Wetland, forested: a wetland that is dominated by mature woody vegetation or a wetland vegetation class that is characterized by woody vegetation at least twenty feet tall. (Ord. 15051 § 116, 2004: Ord. 10870 § 320, 1993).

21A.06.1405 Wetland functions. Wetland functions: natural processes performed by wetlands including functions which are important in facilitating food chain production, providing habitat for nesting, rearing and resting sites for aquatic, terrestrial and avian species, maintaining the availability and quality of water, acting as recharge and discharge areas for groundwater aquifers and moderating surface and storm water flows, as well as performing other functions including, but not limited to, those set forth in 33 CFR 320.4(b)(2), 1988. (Ord. 10870 § 321, 1993).

21A.06.1414 Wetland reestablishment. Wetland reestablishment: For purposes of wetland mitigation, the manipulation of the physical, chemical, or biological characteristics of a site with the goal of returning natural or historic functions to a former wetland. Activities to reestablish a wetland include removing fill material, plugging ditches, or breaking drain tiles. Wetland reestablishment results in a gain in wetland acres. (Ord. 15051 § 120, 2004).

21A.06.1416 Wetland rehabilitation. Wetland rehabilitation: For purposes of wetland mitigation, the manipulation of the physical, chemical, or biological characteristics of a site with the goal of repairing natural or historic functions of a degraded wetland. Activities to rehabilitate a wetland include breaching a dike to reconnect wetlands to a floodplain or return tidal influence to a wetland. Wetland rehabilitation results in a gain in wetland function but does not result in a gain in wetland acres. (Ord. 15051 § 121, 2004).

21A.06.1418 Wetland vegetation class. Wetland vegetation class: a wetland community classified by its vegetation including aquatic bed, emergent, forested and shrub-scrub. To constitute a separate wetland vegetation class, the vegetation must be at least partially rooted within the wetland and must occupy the uppermost stratum of a contiguous area or comprise at least thirty percent areal coverage of the entire wetland. (Ord. 15051 § 122, 2004).

21A.06.1420 Wetpond. Wetpond: an artificial water body constructed as a part of a surface water management system. (Ord. 10870 § 324, 1993).

21A.06.1422 Wildlife. Wildlife: birds, fish and animals, that are not domesticated and are considered to be wild. (Ord. 15051 § 123, 2004).

21A.06.1423 Wildlife habitat conservation area. Wildlife habitat conservation area: an area for a species whose habitat the King County Comprehensive Plan requires the county to protect that includes an active breeding site and the area surrounding the breeding site that is necessary to protect breeding activity. (Ord. 15051 § 124, 2004).

21A.06.1424 Wildlife habitat network. Wildlife habitat network: the official wildlife habitat network defined and mapped in the King County Comprehensive Plan that links wildlife habitat with critical areas, critical area buffers, priority habitats, trails, parks, open space and other areas to provide for wildlife movement and alleviate habitat fragmentation. (Ord. 15051 § 125, 2004).

21A.06.1425 Wildlife shelter. Wildlife shelter: a facility for the temporary housing of sick, wounded or displaced wildlife. (Ord. 10870 § 325, 1993).

21A.06.1427 Winery. Winery: An establishment primarily engaged in one or more of the following:

A. Growing grapes or fruit and manufacturing wine, cider or brandies;

B. Manufacturing wine, cider, or brandies from grapes and other fruits grown elsewhere; and

C. Blending wines, cider or brandies. (Ord. 15974 § 5, 2007).

21A.06.1430 Work release facility. Work release facility: a facility which allows the opportunity for convicted persons to be employed outside of the facility, but requires confinement within the facility when not in the place of employment. (Ord. 10870 § 326, 1993).

21A.06.1432 Wrecked, dismantled or inoperative vehicle. Wrecked, dismantled or inoperative vehicle: a motor vehicle as defined in RCW 46.04.320 or a boat that meets at least three of the following:

A. Is three years old or older;

B. Is extensively damaged, with the damage including, but not limited, to:

1. A broken window or windshield; or
2. Missing wheels, tires, motor or transmission;

C. Is apparently inoperable; and

D. Has an approximate fair market value equal only to the approximate value of the scrap in it.

(Ord. 17539 § 25, 2013: Ord. 14309 § 14, 2002: Ord. 12024 § 11, 1995).

21A.06.1435 Yard or organic waste processing facility. Yard or organic waste processing facility: a site where yard and garden wastes, including wood and landclearing debris, are processed into new products such as soil amendments and wood chips. (Ord. 11157 § 10, 1993: Ord. 10870 § 327, 1993).

21A.06.1440 Zoo animal breeding facility. Zoo animal breeding facility: a non-profit farm which is owned by an American Zoo and Aquarium Association (AZA) accredited zoo, is accredited by the AZA and is operated in conformance with all licensing requirements of the United States Department of Agriculture for the purposes of long-term species survival, propagation, conservation, research, and husbandry of native and exotic wildlife and for training zoo professionals, biologists, veterinarians and other zoo-related researchers. (Ord. 12709 § 3, 1997).

21A.08 PERMITTED USES

Sections:

21A.08.010 Uses are subject to other rules and regulations.
21A.08.020 Interpretation of land use tables.
21A.08.025 Accessory uses prohibited if not expressly permitted.
21A.08.030 Residential land uses.
21A.08.040 Recreational/cultural land uses.
21A.08.050 General services land uses.
21A.08.060 Government/business service land uses.
21A.08.070 Retail land uses.
21A.08.080 Manufacturing land uses.
21A.08.090 Resource land uses.
21A.08.100 Regional land uses.
21A.08.110 Shoreline jurisdiction - permitted uses - exceptions.
21A.08.900 Applicability - Ordinance 13694.

21A.08.010 Uses are subject to other rules and regulations. Uses permitted under this chapter are subject to all applicable King County rules and regulations and other applicable local, state or federal rules and regulations. (Ord. 17841 § 22, 2014: Ord. 10870 § 328, 1993).

21A.08.020 Interpretation of land use tables.

A. The land use tables in this chapter determine whether a specific use is allowed in a zone district. The zone district is located on the vertical column and the specific use is located on the horizontal row of these tables.

B. If no symbol appears in the box at the intersection of the column and the row, the use is not allowed in that district, except for certain temporary uses.

C. If the letter "P" appears in the box at the intersection of the column and the row, the use is allowed in that district subject to the review procedures specified in K.C.C. 21A.42 and the general requirements of the code.

D. If the letter "C" appears in the box at the intersection of the column and the row, the use is allowed subject to the conditional use review procedures specified in K.C.C. 21A.42 and the general requirements of the code.

E. If the letter "S" appears in the box at the intersection of the column and the row, the regional use is permitted subject to the special use permit review procedures specified in K.C.C. 21A.42 and the general requirements of the code.

F. If a number appears in the box at the intersection of the column and the row, the use may be allowed subject to the appropriate review process indicated above, the general requirements of the code and the specific conditions indicated in the development condition with the corresponding number immediately following the land use table.

G. If more than one letter-number combination appears in the box at the intersection of the column and the row, the use is allowed in that zone subject to different sets of limitation or conditions depending on the review process indicated by the letter, the general requirements of the code and the specific conditions indicated in the development condition with the corresponding number immediately following the table.

H. All applicable requirements shall govern a use whether or not they are cross-referenced in a section. (Ord. 10870 § 329, 1993).

21A.08.025 Accessory uses prohibited if not expressly permitted. Any accessory use not expressly permitted by this chapter or by the director shall be prohibited. The director may determine whether any accessory use on a site is incidental or subordinate to a principal use on the same site and whether uses not listed as accessory uses are customarily associated with a principal use. The director shall consider the purpose of the zone in K.C.C. chapter 21A.04 in making these determinations. (Ord. 17841 § 23, 2014).

21A.08.030 Residential land uses.

A. Residential land uses.

KEY		RESOURCE			RURAL	RESIDENTIAL			COMMERCIAL/INDUSTRIAL				
P-Permitted Use **C**-Conditional Use **S**-Special Use	ZONE	AGRICULTURE	FOREST	MINERAL	RURAL AREA	*URBAN RESERVE	URBAN	RESIDENTIAL	NEIGHBORHOOD BUSINESS	COMMUNITY BUSINESS	REGIONAL BUSINESS	OFFICE	INDUSTRIAL
SIC #	**SPECIFIC LAND USE**	**A**	**F**	**M**	**RA**	**UR**	**R1-8**	**R12-48**	**NB**	**CB**	**RB**	**O**	**I**
	DWELLING UNITS, TYPES:												
*	Single Detached	P C12	P2		P C12	P C12	P C12	P C12	P15				
*	Townhouse				C4	C4	P11 C12	P	P3	P3	P3	P3	
*	Apartment				C4	C4	P5 C5	P	P3	P3	P3	P3	
*	Mobile Home Park				S13		C8	P					
*	Cottage Housing						P15						
	GROUP RESIDENCES:												
*	Community Residential Facility-I				C	C	P14. a C	P	P3	P3	P3	P3	
*	Community Residential Facility-II						P14. b	P	P3	P3	P3	P3	
*	Dormitory				C6	C6	C6	P					
*	Senior Citizen Assisted Housing					P4	P4	P	P3	P3	P3	P3	
	ACCESSORY USES:												
*	Residential Accessory Uses	P7 P17	P7		P7	P7	P7	P7	P7	P7	P7	P7	
*	Home Occupation	P18	P18		P18	P18	P18	P18	P18	P18	P18	P18	
*	Home Industry	C			C	C	C						
	TEMPORARY LODGING:												
7011	Hotel/Motel (1)									P	P	P	
*	Bed and Breakfast Guesthouse	P9			P9	P9	P9	P9	P9	P10	P10		
7041	Organization Hotel/Lodging Houses										P		
GENERAL CROSS REFERENCES:	Land Use Table Instructions, see K.C.C. 21A.08.020 and 21A.02.070; Development Standards, see K.C.C. chapters 21A.12 through 21A.30; General Provisions, see K.C.C. chapters 21A.32 through 21A.38; Application and Review Procedures, see K.C.C. chapters 21A.40 through 21A.44; (*)Definition of this specific land use, see K.C.C. chapter 21A.06.												

B. Development conditions.

1. Except bed and breakfast guesthouses.
2. In the forest production district, the following conditions apply:

a. Site disturbance associated with development of any new residence shall be limited to three acres. Site disturbance shall mean all land alterations including, but not limited to, grading, utility installation, landscaping, clearing for crops, on-site sewage disposal systems and driveways. Additional site disturbance for agriculture, including raising livestock, up to the smaller of thirty-five percent of the lot or seven aces, may be approved only if a farm management plan is prepared in accordance with K.C.C. chapter 21A.30. Animal densities shall be based on the area devoted to animal care and not the total area of the lot;

b. A forest management plan shall be required for any new residence in the forest production district, that shall be reviewed and approved by the King County department of natural resources and parks before building permit issuance; and

c. The forest management plan shall incorporate a fire protection element that includes fire safety best management practices developed by the department.

3. Only as part of a mixed use development subject to the conditions of K.C.C. chapter 21A.14, except that in the NB zone on properties with a land use designation of commercial outside of center (CO) in the urban areas, stand-alone townhouse developments are permitted subject to K.C.C. 21A.12.040, 21A.14.030, 21A.14.060 and 21A.14.180.

4. Only in a building listed on the National Register as an historic site or designated as a King County landmark subject to K.C.C. 21A.32.

5.a. In the R-1 zone, apartment units are permitted, if:

(1) At least fifty percent of the site is constrained by unbuildable critical areas. For purposes of this subsection, unbuildable critical areas includes wetlands, aquatic areas and slopes forty percent or steeper and associated buffers; and

(2) The density does not exceed a density of eighteen units per acre of net buildable area.

b. In the R-4 through R-8 zones, apartment units are permitted if the density does not exceed a density of eighteen units per acre of net buildable area.

c. If the proposal will exceed base density for the zone in which it is proposed, a conditional use permit is required.

6. Only as accessory to a school, college, university or church.

7.a. Accessory dwelling units:

(1) Only one accessory dwelling per primary single detached dwelling unit;

(2) Only in the same building as the primary dwelling unit on:

(a) an urban lot that is less than five thousand square feet in area;

(b) except as otherwise provided in subsection B.7.a.(5) of this section, a rural lot that is less than the minimum lot size; or

c. a lot containing more than one primary dwelling;

(3) The primary dwelling unit or the accessory dwelling unit shall be owner occupied;

(4)(a) Except as otherwise provided in subsection B.7.a(5) of this section, one of the dwelling units shall not exceed one thousand square feet of heated floor area except when one of the dwelling units is wholly contained within a basement or attic; and

(b) When the primary and accessory dwelling units are located in the same building, or in multiple buildings connected by a breezeway or other structure, only one entrance may be located on each street;

(5) On a site zoned RA:

(a) If one transferable development right is purchased from the rural area under K.C.C. chapter 21A.37, the smaller of the dwelling units is permitted a maximum floor area up to one thousand five hundred square feet; and

(b) If one transferable development right is purchased from the rural area under K.C.C. chapter 21A.37, a detached accessory dwelling unit is allowed on an RA-5 zoned lot that is at least two and one-half acres and less than three and three-quarters acres;

(6) One additional off-street parking space shall be provided;

(7) The accessory dwelling unit shall be converted to another permitted use or shall be removed if one of the dwelling units ceases to be owner occupied; and

(8) An applicant seeking to build an accessory dwelling unit shall file a notice approved by the department of executive services, records and licensing services division, that identifies the dwelling unit as accessory. The notice shall run with the land. The applicant shall submit proof that the notice was filed before the department shall approve any permit for the construction of the accessory dwelling unit. The required contents and form of the notice shall be set forth in administrative rules. If an accessory dwelling unit in a detached building in the rural zone is subsequently converted to a primary unit on a separate lot, neither the original lot nor the new lot may have an additional detached accessory dwelling unit constructed unless the lot is at least twice the minimum lot area required in the zone; and

(9) Accessory dwelling units and accessory living quarters are not allowed in the F zone.

b. One single or twin engine, noncommercial aircraft shall be permitted only on lots that abut, or have a legal access that is not a county right-of-way, to a waterbody or landing field, but only if there are:

(1) no aircraft sales, service, repair, charter or rental; and

(2) no storage of aviation fuel except that contained in the tank or tanks of the aircraft.

c. Buildings for residential accessory uses in the RA and A zone shall not exceed five thousand square feet of gross floor area, except for buildings related to agriculture or forestry.

8. Mobile home parks shall not be permitted in the R-1 zones.

9. Only as accessory to the permanent residence of the operator, and:

a. Serving meals shall be limited to paying guests; and

b. The number of persons accommodated per night shall not exceed five, except that a structure that satisfies the standards of the International Building Code as adopted by King County for R-1 occupancies may accommodate up to ten persons per night.

10. Only if part of a mixed use development, and subject to the conditions of subsection B.9. of this section.

11. Townhouses are permitted, but shall be subject to a conditional use permit if exceeding base density.

12. Required before approving more than one dwelling on individual lots, except on lots in subdivisions, short subdivisions or binding site plans approved for multiple unit lots, and except as provided for accessory dwelling units in subsection B.7. of this section.

13. No new mobile home parks are allowed in a rural zone.

14.a. Limited to domestic violence shelter facilities.

b. Limited to domestic violence shelter facilities with no more than eighteen residents or staff.

15. Only in the R4-R8 zones limited to:

a. developments no larger than one acre;

b. not adjacent to another cottage housing development such that the total combined land area of the cottage housing developments exceeds one acre;

c. All units must be cottage housing units with no less than three units and no more than sixteen units, provided that if the site contains an existing home that is not being demolished, the existing house is not required to comply with the height limitation in K.C.C. 21A.12.020.B.25. or the floor area and footprint limits in K.C.C. 21A.14.025.B; and

d. Before filing an application with the department, the applicant shall hold a community meeting in accordance with K.C.C. 20.20.035.

15. The development for a detached single-family residence shall be consistent with the following:

a. The lot must have legally existed before March 1, 2005;

b. The lot has a Comprehensive Plan land use designation of Rural Neighborhood Commercial Center or Rural Area; and

c. The standards of this title for the RA-5 zone shall apply.

17. Housing for agricultural employees who are employed by the owner or operator of the site year-round as follows:

a. Not more than:

(1) One agricultural employee dwelling unit on a site under twenty acres;

(2) Two agricultural employee dwelling units on a site between twenty acres and fifty acres;

(3) Three agricultural employee dwelling units on a site greater than fifty acres and less than one-hundred acres; and

(4) On sites one-hundred acres and larger one additional agricultural employee dwelling unit for each additional one hundred acres;

b. The primary use of the site shall be agricultural in SIC Industry Group No. 01-Growing and Harvesting Crops or SIC Industry Group No. 02-Raising Livestock and Small Animals. If the primary use of the site changes to a nonagricultural use, all agricultural employee dwelling units shall be removed;

c. The applicant shall file with the department of executive services, records and licensing services division, a notice approved by the department that identifies the agricultural employee dwelling units as accessory and that the dwelling units shall only be occupied by agricultural employees who are employed by the owner or operator year-round. The notice shall run with the land. The applicant shall submit to the department proof that the notice was filed with the department of executive services, records and licensing services division, before the department approves any permit for the construction of agricultural employee dwelling units;

d. An agricultural employee dwelling unit shall not exceed a floor area of one thousand square feet and may be occupied by no more than eight unrelated agricultural employees;

e. One off-street parking space shall be provided for each agricultural employee dwelling unit; and

f. The agricultural employee dwelling units shall be constructed in compliance with K.C.C. Title 16.

18. Allowed if consistent with K.C.C. chapter 21A.30.

(Ord. 17841 § 24, 2014: Ord. 17539 § 26, 2013: Ord. 17191 § 30, 2011: Ord. 16950 § 14, 2010: Ord. 16267 § 19, 2008: Ord. 16040 § 3, 2008: Ord. 15974 § 6, 2007: Ord. 15971 § 93, 2007: 15606 § 11, 2006: Ord. 15032 § 10, 2004: Ord. 14279 § 1, 2002: Ord. 14199 § 232, 2001: Ord. 14045 § 10, 2001: Ord. 12786 § 2, 1997: Ord. 12596 § 3, 1997: Ord. 12522 § 3, 1996: Ord. 12273 § 1, 1996: Ord. 12243 § 1, 1996: Ord. 11621 § 135, 1994: Ord. 11157 § 11, 1993: Ord. 10870 § 330, 1993).

21A.08.040 Recreational/cultural land uses.

A. Recreational/cultural land uses.

KEY			RESOURCE			RURAL	RESIDENTIAL			COMMERCIAL/INDUSTRIAL				
P-Permitted Use **C**-Conditional Use **S**-Special Use		ZONE	AGRICULTURE	FOREST	MINERAL	RURAL AREA	URBAN RESERVE	URBAN	RESIDENTIAL	NEIGHBORHOOD BUSINESS	COMMUNITY BUSINESS	REGIONAL BUSINESS	OFFICE	INDUSTRIAL
SIC #	**SPECIFIC LAND USE**		**A**	**F**	**M**	**RA**	**UR**	**R1-8**	**R12-48**	**NB**	**CB**	**RB**	**O**	**I**
	PARK/RECREATION:													
*	Park		P1	P1	P1	P1	P1	P1	P1	P	P	P	P	P13
*	Trails		P	P	P	P	P	P	P	P	P	P	P	P
*	Campgrounds			P16 C16a	P16	P16 C16a	P16 C16a							P16 C16a
*	Destination Resorts			S		S18	C					C		
*	Marina			C 3		C4	C4	C4	C4	P5	P	P	P	P
*	Recreational Vehicle Park			P19	P19	C2 and 18 P19	C2 P19							
*	Sports Club (17)					C4 and 18	C4	C4	C4	C	P	P		
*	Ski Area			S		S18								
*	Recreational Camp			C		P24 C								
	AMUSEMENT/ENTERTAINMENT:													
*	Adult Entertainment Business										P6	P6	P6	
*	Theater										P	P	P	P25
7833	Theater, Drive-in											C		
793	Bowling Center										P	P		P
*	Golf Facility					C7 and 18	P7	P7	P7					
7999 (14)	Amusement and Recreation Services			P21	P21	P8 P21 C15 and 18	P8 P21 P22 C15	P8 P21 P22 C15	P8 P21 P22 C15	P21 P22	P	P	P21	P21
*	Indoor Paintball Range										P26	P26		P26
*	Outdoor Paintball Range					C27	C27							
*	Shooting Range			C9		C9 and 18						C10		P10
*	Amusement Arcades										P	P		
7996	Amusement Park											C		
*	Outdoor Performance Center			S		C12 S18		P20	P20			S		
	CULTURAL:													
823	Library					P11	P11 C	P11 C	P28	P	P	P	P	
841	Museum		C2 3	C23		P11	P11 C	P11 C	P28	P	P	P	P	P
842	Arboretum		P	P		P	P	P	P	P	P	P	P	
*	Conference Center					P29 C12	P29 C12	P29 C	P29 C	P	P	P	P	

GENERAL CROSS REFERENCES:
Land Use Table Instructions, see K.C.C. 21A.08.020 and 21A.02.070;
Development Standards see K.C.C. chapters 21A.12 through 21A.30;
General Provisions, see K.C.C. chapters 21A.32 through 21A.38;
Application and Review Procedures, see K.C.C. chapters 21A.40 through 21A.44;

B. Development conditions.

1. The following conditions and limitations shall apply, where appropriate:

a. No stadiums on sites less than ten acres;

b. Lighting for structures and fields shall be directed away from rural area and residential zones;

c. Structures or service yards shall maintain a minimum distance of fifty feet from property lines adjoining rural area and residential zones, except for fences and mesh backstops;

d. Facilities in the A zone shall be limited to trails and trailheads, including related accessory uses such as parking and sanitary facilities; and

e. Overnight camping is allowed only in an approved campground.

2. Recreational vehicle parks are subject to the following conditions and limitations:

a. The maximum length of stay of any vehicle shall not exceed one hundred eighty days during a three-hundred-sixty-five-day period;

b. The minimum distance between recreational vehicle pads shall be no less than ten feet; and

c. Sewage shall be disposed in a system approved by the Seattle-King County health department.

3. Limited to day moorage. The marina shall not create a need for off-site public services beyond those already available before the date of application.

4. Not permitted in the RA-10 or RA-20 zones. Limited to recreation facilities subject to the following conditions and limitations:

a. The bulk and scale shall be compatible with residential or rural character of the area;

b. For sports clubs, the gross floor area shall not exceed ten thousand square feet unless the building is on the same site or adjacent to a site where a public facility is located or unless the building is a nonprofit facility located in the urban area; and

c. Use is limited to residents of a specified residential development or to sports clubs providing supervised instructional or athletic programs.

5. Limited to day moorage.

6.a. Adult entertainment businesses shall be prohibited within three hundred thirty feet of any property zoned RA, UR or R or containing schools, licensed daycare centers, public parks or trails, community centers, public libraries or churches. In addition, adult entertainment businesses shall not be located closer than three thousand feet to any other adult entertainment business. These distances shall be measured from the property line of the parcel or parcels proposed to contain the adult entertainment business to the property line of the parcels zoned RA, UR or R or that contain the uses identified in this subsection B.6.a.

b. Adult entertainment businesses shall not be permitted within an area likely to be annexed to a city subject to an executed interlocal agreement between King County and a city declaring that the city will provide opportunities for the location of adult businesses to serve the area. The areas include those identified in the maps attached to Ordinance 13546.

7. Clubhouses, maintenance buildings, equipment storage areas and driving range tees shall be at least fifty feet from rural area and residential zoned property lines. Lighting for practice greens and driving range ball impact areas shall be directed away from adjoining rural area and residential zones. Applications shall comply with adopted best management practices for golf course development. Within the RA zone, those facilities shall be permitted only in the RA-5 and RA-2.5 zones. Not permitted in designated rural forest focus area, regionally significant resource areas or locally

significant resource areas. Ancillary facilities associated with a golf course are limited to practice putting greens, maintenance buildings and other structures housing administrative offices or activities that provide convenience services to players. These convenience services are limited to a pro shop, food services and dressing facilities and shall occupy a total of no more than ten thousand square feet. Furthermore, the residential density that is otherwise permitted by the zone shall not be used on other portions of the site through clustering or on other sites through the transfer of density provision. This residential density clustering or transfer limitation shall be reflected in a deed restriction that is recorded at the time applicable permits for the development of the golf course are issued.

8. Limited to golf driving ranges, only as:

a. accessory to golf courses; or

b. accessory to a recreation or multiuse park.

9.a. New structures and outdoor ranges shall maintain a minimum distance of fifty feet from property lines adjoining rural area and residential zones, but existing facilities shall be exempt.

b. Ranges shall be designed to prevent stray or ricocheting projectiles, pellets or arrows from leaving the property.

c. Site plans shall include: safety features of the range; provisions for reducing sound produced on the firing line; elevations of the range showing target area, backdrops or butts; and approximate locations of buildings on adjoining properties.

d. Subject to the licensing provisions of K.C.C. Title 6.

10.a. Only in an enclosed building, and subject to the licensing provisions of K.C.C. Title 6;

b. Indoor ranges shall be designed and operated so as to provide a healthful environment for users and operators by:

(1) installing ventilation systems that provide sufficient clean air in the user's breathing zone, and

(2) adopting appropriate procedures and policies that monitor and control exposure time to airborne lead for individual users.

11. Only as accessory to a park or in a building listed on the National Register as an historic site or designated as a King County landmark subject to K.C.C. chapter 21A.32.

12.a. Only as accessory to a nonresidential use established through a discretionary permit process, if the scale is limited to ensure compatibility with surrounding neighborhoods; and

b. In the UR zone, only if the property is located within a designated unincorporated rural town.

13. Subject to the following:

a. The park shall abut an existing park on one or more sides, intervening roads notwithstanding;

b. No bleachers or stadiums are permitted if the site is less than ten acres, and no public amusement devices for hire are permitted;

c. Any lights provided to illuminate any building or recreational area shall be so arranged as to reflect the light away from any premises upon which a dwelling unit is located; and

d. All buildings or structures or service yards on the site shall maintain a distance not less than fifty feet from any property line and from any public street.

14. Excluding amusement and recreational uses classified elsewhere in this chapter.

15. For amusement and recreation services not otherwise provided for in this chapter:

a. In the RA zones, not subject to regulation under K.C.C. Title 6 and only on sites at least five acres or larger;

b. Retail sales are limited to incidental sales to patrons of the amusement or recreation service; and

c. Does not involve the operation of motor vehicles or off-road vehicles, including, but not limited to, motorcycles and gocarts.

16. Subject to the following conditions:

a. The length of stay per party in campgrounds shall not exceed one hundred eighty days during a three-hundred-sixty-five-day period; and

b. Only for campgrounds that are part of a proposed or existing county park, that are subject to review and public meetings through the department of natural resources and parks.

17. Only for stand-alone sports clubs that are not part of a park.

18. Subject to review and approval of conditions to comply with trail corridor provisions of K.C.C. chapter 21A.14 when located in an RA zone.

19. Only as an accessory to a recreation or multiuse park.

20. Only as an accessory to a recreation or multiuse park of [at] least twenty acres located within the urban growth area or on a site immediately adjacent to the urban growth area with the floor area of an individual outdoor performance center stage limited to three thousand square feet.

21. Limited to rentals of sports and recreation equipment with a total floor area of no more than seven hundred fifty square feet and only as accessory to a park, or in the RA zones, to a recreation or multiuse park.

22. Only as accessory to a large active recreation and multiuse park and limited to:

a. water slides, wave pools and associated water recreation facilities; and

b. rentals of sports and recreation equipment.

23. Limited to natural resource and heritage museums and only allowed in a farm or forestry structure, including but not limited to barns or sawmills, existing as of December 31, 2003.

24. Use is permitted without a conditional use permit only when in compliance with all of the following conditions:

a. The use is limited to camps for youths or for persons with special needs due to a disability, as defined by the American With Disabilities Act of 1990, or due to a medical condition and including training for leaders for those who use the camp;

b. Active recreational activities shall not involve the use of motorized vehicles such as cross-country motorcycles or all-terrain vehicles or the use of firearms. The prohibition on motorized vehicles does not apply to such vehicles that may be necessary for operation and maintenance of the facility or to a client-specific vehicle used as a personal mobility device;

c.(1) Except as provided in subsection B.24.c.(2)(b) of this section, the number of overnight campers, not including camp personnel, in a new camp shall not exceed:

(a) one hundred and fifty for a camp between twenty and forty acres; or

(b) for a camp greater than forty acres, but less than two hundred and fifty acres, the number of users allowed by the design capacity of a water system and on-site sewage disposal system approved by the department of health, Seattle/King County, up to a maximum of three hundred and fifty; and

(2) Existing camps shall be subject to the following:

(a) For a camp established before August 11, 2005, with a conditional use permit and that is forty acres or larger, but less than one hundred and sixty acres, the number of overnight campers, not including camp personnel, may be up to one hundred and fifty campers over the limit established by subsection B.24.c.(1)(b) of this section.

(b) For a camp established before August 11, 2005, with a conditional use permit and that is one hundred and sixty acres or larger, but less than two hundred acres, the number of overnight campers, not including camp personnel, may be up to three hundred and fifty campers over the limit established by subsection B.24.c.(1)(b) of this section. The camp may terminate operations at its existing site and establish a new camp if the area of the camp is greater than two hundred and fifty acres and the number of overnight campers, not including camp personnel, shall not exceed seven hundred.

d. The length of stay for any individual overnight camper, not including camp personnel, shall not exceed ninety days during a three-hundred-sixty-five-day period;

e. The camp facilities, such as a medical station, food service hall, and activity rooms, shall be of a scale to serve overnight camp users;

f. The minimum size of parcel for such use shall be twenty acres;

g. Except for any permanent caretaker residence, all new structures where camp users will be housed, fed or assembled shall be no less than fifty feet from properties not related to the camp;

h. In order to reduce the visual impacts of parking areas, sports and activity fields or new structures where campers will be housed, fed or assembled, the applicant shall provide a Type 3 landscape buffer no less than twenty feet wide between the nearest property line and such parking area, field, or structures, by retaining existing vegetation or augmenting as necessary to achieve the required level of screening;

i. If the site is adjacent to an arterial roadway, access to the site shall be directly onto said arterial unless direct access is unsafe due inadequate sight distance or extreme grade separation between the roadway and the site;

j. If direct access to the site is via local access streets, transportation demand management measures, such as use of carpools, buses or vans to bring in campers, shall be used to minimize traffic impacts;

k. Any lights provided to illuminate any building or recreational area shall be so arranged as to reflect the light away from any adjacent property; and

l. A community meeting shall be convened by the applicant before submittal of an application for permits to establish a camp, or to expand the number of camp users on an existing camp site as provided in subsection B.24.c.(2)(b) of this section. Notice of the meeting shall be provided at least two weeks in advance to all property owners within five hundred feet, or at least twenty of the nearest property owners, whichever is greater. The notice shall at a minimum contain a brief description of the project and the location, as well as, contact persons and numbers.

25. Limited to theaters primarily for live productions located within a Rural Town designated by the King County Comprehensive Plan.

26.a. Only in an enclosed building; and

b. A copy of the current liability policy of not less than one million dollars for bodily injury or death shall be maintained in the department.

27. Minimum standards for outdoor paintball recreation fields:

a. The minimum site area is twenty-five acres;

b. Structure shall be no closer than one hundred feet from any lot line adjacent to a rural area or residential zoned property;

c. The area where paintballs are discharged shall be located more than three hundred feet of any lot line and more than five hundred feet from the lot line of any adjoining rural area or residential zoned property. The department may allow for a lesser setback if it determines through the conditional use permit review that the lesser setback in combination with other elements of the site design provides adequate protection to adjoining properties and rights-of-ways;

d. A twenty-foot high nylon mesh screen shall be installed around all play areas and shall be removed at the end of each day when the play area is not being used. The department may allow for the height of the screen to be lowered to no less than ten feet if it determines through the conditional use permit review that the lower screen in combination with other elements of the site design provides adequate protection from discharged paintballs;

e. All parking and spectator areas, structures and play areas shall be screened from adjoining rural area or residential zoned property and public rights of way with Type 1 landscaping at least ten feet wide;

f. Any retail sales conducted on the property shall be accessory and incidental to the permitted activity and conducted only for the participants of the site;

g. A plan of operations specifying days and hours of operation, number of participants and employees, types of equipment to be used by users of the site, safety procedures, type of compressed air fuel to be used on the site and storage and maintenance procedures for the compressed air fuel shall be provided for review in conjunction with the conditional use permit application. All safety procedures shall be reviewed and approved by department of public safety before submittal of the conditional use permit application. All activities shall be in compliance with National Paintball League standards;

h. The hours of operation shall be limited to Saturdays and Sundays and statutory holidays from 8:30 A.M. to 8:30 P.M., and further restricted as applicable to daylight hours;

i. No more than one hundred paintball players shall be allowed on the site at any one time;

j. No outdoor lights or amplified sounds shall be permitted;

k. The facility shall have direct access to a road designated as a major collector (or higher) in the Comprehensive Plan unless the department determines through the conditional use permit review that the type and amount of traffic generated by the facility is such that it will not cause an undue impact on the neighbors or adversely affect safety of road usage;

l. The facility shall be secured at the close of business each day;

m. All equipment and objects used in the paintball activities shall be removed from the site within ninety days of the discontinuance of the paintball use; and

n. A copy of the current liability policy of not less than one million dollars for bodily injury or death shall be submitted with the conditional use permit application and shall be maintained in the department.

28. Before filing an application with the department, the applicant shall hold a community meeting in accordance with K.C.C. 20.20.035.

29. Only as accessory to a recreation or multiuse park of least twenty acres located within the urban growth area or on a site immediately adjacent to the urban growth area or in a building listed on the National Register as an historic site or designated as a King County landmark subject to K.C.C. chapter 21A.32. (Ord. 17841 § 25, 2014: Ord. 17539 § 27, 2013: Ord. 17191 § 31, 2011: Ord. 16950 § 15, 2010: Ord. 16333 § 2, 2008: Ord. 16267 § 20, 2008: Ord. 15606 § 12, 2006: Ord. 15245 § 3, 2005: Ord. 15032 § 11, 2004: Ord. 14807 § 4, 2003: Ord. 14185 § 2, 2001: Ord. 14045 § 11, 2001: Ord. 13546 § 3, 1999: Ord. 13278 § 3, 1998: Ord. 13022 § 11, 1998: Ord. 12930 § 1, 1997: Ord. 12596 § 4, 1997: Ord. 12303 § 1, 1996: Ord. 12243 § 3, 1996: Ord. 11821 § 1, 1995: Ord. 11621 § 35, 1994: Ord. 11288 § 1, 1994: Ord. 11177 § 2, 1993: Ord. 10870 § 331, 1993).

21A.08.050 General services land uses.

A. General services land uses.

KEY		ZONE	RESOURCE			RURAL	RESIDENTIAL				COMMERCIAL/INDUSTRIAL					
P-Permitted Use **C**-Conditional Use **S**-Special Use			AGRICULTURE	FOREST	MINERAL	RURAL AREA	URBAN	RESERVE	URBAN	RESIDENTIAL	NEIGHBORHOOD	BUSINESS	COMMUNITY	BUSINESS	REGIONAL	BUSINESS	OFFICE	INDUSTRIAL
SIC#	**SPECIFIC LAND USE**		**A**	**F**	**M**	**RA**	**UR**	**R1-8**		**R12-48**	**NB**		**CB**		**RB**		**O**	**I**
	PERSONAL SERVICES:																	
72	General Personal Service							C25 C37		C25 C37	P		P		P		P3	P3
7216	Drycleaning Plants																	P
7218	Industrial Launderers																	P
7261	Funeral Home/Crematory						C4	C4		C4			P		P			
*	Cemetery, Columbarium or Mausoleum					P24 C5 and 31	P24 C5	P24 C5		P24 C5	P24		P24		P24 C5		P24	
*	Day Care I		P6			P6	P6	P6		P	P		P		P		P7	P7
*	Day Care II					P8 C	P8 C	P8 C		P8 C	P		P		P		P7	P7
074	Veterinary Clinic		P9			P9 C10 and 31	P9 C10				P10		P10		P10			P
753	Automotive Repair (1)										P11		P		P			P
754	Automotive Service										P11		P		P			P
76	Miscellaneous Repair		P33			P32 P33	P32	P32		P32	P32		P		P			P
866	Church, Synagogue, Temple					P12 C27 and 31	P12 C	P12 C		P12 C	P		P		P		P	
83	Social Services (2)					P12 P13 C31	P12 P13 C	P12 P13 C		P12 P13 C	P		P		P		P	
0752	Animal specialty services					C P35 P36	C				P		P		P		P	P
*	Stable		P14 C			P14 C31	P14 C	P 14 C										
*	Commercial Kennel or Commercial Cattery		P42			C43	C43						C43		P43			
*	Theatrical Production Services												P30		P28			
*	Artist Studios					P28	P28	P28		P28	P		P		P		P29	P
*	Interim Recycling Facility					P21	P21	P21		P21	P22		P22		P		P21	P
*	Dog training facility		C34			C34	C34				P		P		P			P
	HEALTH SERVICES:																	
801-	Office/Outpatient					P12	P12	P12		P12	P		P		P		P	P

04	Clinic				C 13a	C13a	C13 a C37	C13a C37					
805	Nursing and Personal Care Facilities							C		P	P		
806	Hospital						C13 a	C13a		P	P	C	
807	Medical/Dental Lab									P	P	P	P
808-09	Miscellaneous Health									P	P	P	
	EDUCATION SERVICES:												
*	Elementary School				P39 P40	P	P	P		P16 P40	P16 P40	P16 P40	
*	Middle/Junior High School				P40 C39 and 31	P	P	P		P16 C40	P16 C40	P16 C40	
*	Secondary or High School				C39 and 31 C41 and 31	P26	P26	P26		P16 C15	P16 C15	P16	
*	Vocational School					P13a C	P13 a C	P13a C			P15	P17	P
*	Specialized Instruction School		P18		P19 C20 and 31	P19 C20	P19 C20	P19 C20	P	P	P	P17	P 38
*	School District Support Facility					P23 C	P23 C	P23 C	C15	P15	P15	P15	P15
GENERAL CROSS REFERENCES:		Land Use Table Instructions, see K.C.C. 21A.08.020 and 21A.02.070; Development Standards, see K.C.C. chapters 21A.12 through 21A.30; General Provisions, see K.C.C. chapters 21A.32 through 21A.38; Application and Review Procedures, see K.C.C. chapters 21A.40 through 21A.44; (*)Definition of this specific Land Use, see K.C.C. chapter 21A.06.											

B. Development conditions.

1. Except SIC Industry No. 7534-Tire Retreading, see manufacturing permitted use table.

2. Except SIC Industry Group Nos.:

a. 835-Day Care Services, and

b. Community residential facilities.

3. Limited to SIC Industry Group and Industry Nos.:

a. 723-Beauty Shops;

b. 724-Barber Shops;

c. 725-Shoe Repair Shops and Shoeshine Parlors;

d. 7212-Garment Pressing and Agents for Laundries and Drycleaners; and

e. 217-Carpet and Upholstery Cleaning.

4. Only as accessory to a cemetery, and prohibited from the UR zone only if the property is located within a designated unincorporated Rural Town.

5. Structures shall maintain a minimum distance of one hundred feet from property lines adjoining rural area and residential zones.

6. Only as accessory to residential use, and:

a. Outdoor play areas shall be completely enclosed by a solid wall or fence, with no openings except for gates, and have a minimum height of six feet; and

b. Outdoor play equipment shall maintain a minimum distance of twenty feet from property lines adjoining rural area and residential zones.

7. Permitted as an accessory use. See commercial/industrial accessory, K.C.C. 21A.08.060.A.

8. Only as a reuse of a public school facility subject to K.C.C. chapter 21A.32, or an accessory use to a school, church, park, sport club or public housing administered by a public agency, and:

a. Outdoor play areas shall be completely enclosed by a solid wall or fence, with no openings except for gates and have a minimum height of six feet;

b. Outdoor play equipment shall maintain a minimum distance of twenty feet from property lines adjoining rural area and residential zones;

c. Direct access to a developed arterial street shall be required in any residential zone; and

d. Hours of operation may be restricted to assure compatibility with surrounding development.

9. As a home occupation only, but the square footage limitations in K.C.C. chapter 21A.30 for home occupations apply only to the office space for the veterinary clinic, and:

a. Boarding or overnight stay of animals is allowed only on sites of five acres or more;

b. No burning of refuse or dead animals is allowed;

c. The portion of the building or structure in which animals are kept or treated shall be soundproofed. All run areas, excluding confinement areas for livestock, shall be surrounded by an eight-foot-high solid wall and the floor area shall be surfaced with concrete or other impervious material; and

d. The provisions of K.C.C. chapter 21A.30 relative to animal keeping are met.

10.a. No burning of refuse or dead animals is allowed;

b. The portion of the building or structure in which animals are kept or treated shall be soundproofed. All run areas, excluding confinement areas for livestock, shall be surrounded by an eight-foot-high solid wall and the floor area shall be surfaced with concrete or other impervious material; and

c. The provisions of K.C.C. chapter 21A.30 relative to animal keeping are met.

11. The repair work or service shall only be performed in an enclosed building, and no outdoor storage of materials. SIC Industry No. 7532-Top, Body, and Upholstery Repair Shops and Paint Shops is not allowed.

12. Only as a reuse of a public school facility subject to K.C.C. chapter 21A.32. Before filing an application with the department, the applicant shall hold a community meeting in accordance with K.C.C. 20.20.035.

13.a. Except as otherwise provided in 13.b of this subsection, only as a reuse of a surplus nonresidential facility subject to K.C.C. chapter 21A.32.

b. Allowed for a social service agency on a site in the NB zone that serves transitional or low-income housing located within three hundred feet of the site on which the social service agency is located.

c. Before filing an application with the department, the applicant shall hold a community meeting in accordance with K.C.C. 20.20.035.

14. Covered riding arenas are subject to K.C.C. 21A.30.030 and shall not exceed twenty thousand square feet, but stabling areas, whether attached or detached, shall not be counted in this calculation.

15. If located outside of the urban growth area, limited to projects that are of a size and scale designed to primarily serve the rural area and shall be located within a rural town.

16. If located outside of the urban growth area, shall be designed to primarily serve the rural area and shall be located within a rural town. In CB, RB and O, for K-12 schools with no more than one hundred students.

17. All instruction must be within an enclosed structure.

18. Limited to resource management education programs.

19. Only as accessory to residential use, and:

a. Students shall be limited to twelve per one-hour session;

b. Except as provided in subsection c. of this subsection, all instruction must be within an enclosed structure;

c. Outdoor instruction may be allowed on properties at least two and one-half acres in size. Any outdoor activity must comply with the requirements for setbacks in K.C.C. chapter 21A.12; and

d. Structures used for the school shall maintain a distance of twenty-five feet from property lines adjoining rural area and residential zones.

20. Subject to the following:

a. Structures used for the school and accessory uses shall maintain a minimum distance of twenty-five feet from property lines adjoining residential zones;

b. On lots over two and one-half acres:

(1) Retail sale of items related to the instructional courses is permitted, if total floor area for retail sales is limited to two thousand square feet;

(2) Sale of food prepared in the instructional courses is permitted with Seattle-King County department of public health approval, if total floor area for food sales is limited to one thousand square feet and is located in the same structure as the school; and

(3) Other incidental student-supporting uses are allowed, if such uses are found to be both compatible with and incidental to the principal use; and

c. On sites over ten acres, located in a designated Rural Town and zoned any one or more of UR, R-1 and R-4:

(1) Retail sale of items related to the instructional courses is permitted, provided total floor area for retail sales is limited to two thousand square feet;

(2) Sale of food prepared in the instructional courses is permitted with Seattle-King County department of public health approval, if total floor area for food sales is limited to one thousand seven hundred fifty square feet and is located in the same structure as the school;

(3) Other incidental student-supporting uses are allowed, if the uses are found to be functionally related, subordinate, compatible with and incidental to the principal use;

(4) The use shall be integrated with allowable agricultural uses on the site;

(5) Advertised special events shall comply with the temporary use requirements of this chapter; and

(6) Existing structures that are damaged or destroyed by fire or natural event, if damaged by more than fifty percent of their prior value, may reconstruct and expand an additional sixty-five percent of the original floor area but need not be approved as a conditional use if their use otherwise complies with development condition B.20.c. of this section and this title.

21. Limited to:

a. drop box facilities accessory to a public or community use such as a school, fire station or community center; or

b. in the RA zone, a facility accessory to a retail nursery, garden center and farm supply store that accepts earth materials, vegetation, organic waste, construction and demolition materials or source separated organic materials, if:

(1) the site is five acres or greater;

(2) all material is deposited into covered containers or onto covered impervious areas;

(3) the facility and any driveways or other access to the facility maintain a setback of at least twenty five feet from adjacent properties;

(4) the total area of the containers and covered impervious area is ten thousand square feet or less;

(5) ten feet of type II landscaping is provided between the facility and adjacent properties;

(6) no processing of the material is conducted on site; and

(7) access to the facility is not from a local access street.

22. With the exception of drop box facilities for the collection and temporary storage of recyclable materials, all processing and storage of material shall be within enclosed buildings. Yard waste processing is not permitted.

23. Only if adjacent to an existing or proposed school.

24. Limited to columbariums accessory to a church, but required landscaping and parking shall not be reduced.

25. Not permitted in R-1 and limited to a maximum of five thousand square feet per establishment and subject to the additional requirements in K.C.C. 21A.12.230.

26.a. New high schools permitted in the rural and the urban residential and urban reserve zones shall be subject to the review process in K.C.C. 21A.42.140.

b. Renovation, expansion, modernization, or reconstruction of a school, or the addition of relocatable facilities, is permitted.

27. Limited to projects that do not require or result in an expansion of sewer service outside the urban growth area. In addition, such use shall not be permitted in the RA-20 zone.

28. Only as a reuse of a surplus nonresidential facility subject to K.C.C. chapter 21A.32 or as a joint use of an existing public school facility.

29. All studio use must be within an enclosed structure.

30. Adult use facilities shall be prohibited within six hundred sixty feet of any rural area and residential zones, any other adult use facility, school, licensed daycare centers, parks, community centers, public libraries or churches that conduct religious or educational classes for minors.

31. Subject to review and approval of conditions to comply with trail corridor provisions of K.C.C. chapter 21A.14 when located in an RA zone.

32. Limited to repair of sports and recreation equipment:

a. as accessory to a recreation or multiuse park in the urban growth area; or

b. as accessory to a park and limited to a total floor area of seven hundred fifty square feet.

33. Accessory to agricultural or forestry uses provided:

a. the repair of tools and machinery is limited to those necessary for the operation of a farm or forest.

b. the lot is at least five acres.

c. the size of the total repair use is limited to one percent of the lot size up to a maximum of five thousand square feet unless located in a farm structure, including but not limited to barns, existing as of December 31, 2003.

34. Subject to the following:

a. the lot is at least five acres;

b. in the A zones, area used for dog training shall be located on portions of agricultural lands that are unsuitable for other agricultural purposes, such as areas within the already developed portion of such agricultural lands that are not available for direct agricultural production or areas without prime agricultural soils;

c. structures and areas used for dog training shall maintain a minimum distance of seventy-five feet from property lines; and

d. all training activities shall be conducted within fenced areas or in indoor facilities. Fences must be sufficient to contain the dogs.

35. Limited to animal rescue shelters and provided that:

a. the property shall be at least four acres;

b. buildings used to house rescued animals shall be no less than fifty feet from property lines;

c. outdoor animal enclosure areas shall be located no less than thirty feet from property lines and shall be fenced in a manner sufficient to contain the animals;

d. the facility shall be operated by a nonprofit organization registered under the Internal Revenue Code as a 501(c)(3) organization; and

e. the facility shall maintain normal hours of operation no earlier than 7 a.m. and no later than 7 p.m.

36. Limited to kennel-free dog boarding and daycare facilities, and:

a. the property shall be at least four and one-half acres;

b. buildings housing dogs shall be no less than seventy-five feet from property lines;

c. outdoor exercise areas shall be located no less than thirty feet from property lines and shall be fenced in a manner sufficient to contain the dogs;

d. the number of dogs allowed on the property at any one time shall be limited to the number allowed for hobby kennels, as provided in K.C.C. 11.04.060.B; and

e. training and grooming are ancillary services that may be provided only to dogs staying at the facility; and

f. the facility shall maintain normal hours of operation no earlier than 7 a.m. and no later than 7 p.m.

37. Not permitted in R-1 and subject to the additional requirements in K.C.C. 21A.12.250.

38. Driver training is limited to driver training schools licensed under chapter 46.82 RCW.

39. A school may be located outside of the urban growth area only if allowed under King County Comprehensive Plan policies.

40. Only as a reuse of an existing public school.

41. A high school may be allowed as a reuse of an existing public school if allowed under King County Comprehensive Plan policies.

42. Commercial kennels and commercial catteries in the A zone are subject to the following:

a. Only as a home occupation, but the square footage limitations in K.C.C. chapter 21A.30.085 for home occupations apply only to the office space for the commercial kennel or commercial cattery; and

b. Subject to K.C.C. 21A.30.020, except:

(1) A building or structure used for housing dogs or cats and any outdoor runs shall be set back one hundred and fifty feet from property lines;

(2) The portion of the building or structure in which the dogs or cats are kept shall be soundproofed;

(3) Impervious surface for the kennel or cattery shall not exceed twelve thousand square feet; and

(4) Obedience training classes are not allowed except as provided in subsection B.34. of this section.

43. Commercial kennels and commercial catteries are subject to K.C.C. 21A.30.020. (Ord. 17841 § 26, 2014: Ord. 17539 § 28, 2013: Ord. 17485 § 20, 2012: Ord. 17191 § 32, 2011: Ord. 16950 § 16, 2010: Ord. 16594 § 1, 2009: Ord. 16267 § 21,

2008: Ord. 15974 § 7, 2007: Ord. 15816 § 1, 2007: Ord. 15606 § 13, 2006: Ord. 15245 § 4, 2005: Ord. 15032 § 12, 2004: Ord. 14807 § 5, 2003: Ord. 14678 § 1, 2003: Ord. 14429 § 1, 2002: Ord. 14045 § 12, 2001: Ord. 13278 § 4, 1998: Ord. 13022 § 12, 1998: Ord. 12642 § 1, 1997: Ord. 12596 § 5, 1997: Ord. 12588 § 1, 1997: Ord. 12374 § 1, 1996: Ord. 11621 § 36, 1994: Ord. 11157 § 12, 1993: Ord. 11113 § 9, 1993: Ord. 10870 § 332, 1993).

21A.08.060 Government/business services land uses.

A. Government/business services land uses.

KEY		ZONE	RESOURCE			RURAL	RESIDENTIAL			COMMERCIAL/INDUSTRIAL				
P-Permitted Use **C**-Conditional Use **S**-Special Use			AGRICULTURE	FOREST	MINERAL	RURAL AREA	URBAN RESERVE	URBAN	RESIDENTIAL	NEIGHBORHOOD BUSINESS	COMMUNITY BUSINESS	REGIONAL BUSINESS	OFFICE	INDUSTRIAL
SIC#	**SPECIFIC LAND USE**		**A**	**F**	**M**	**RA**	**UR**	**R1-8**	**R12-48**	**NB**	**CB**	**RB**	**O**	**I (30)**
	GOVERNMENT SERVICES:													
*	Public agency or utility office					P3 C5	P3 C5	P3 C	P3 C	P	P	P	P	P16
*	Public agency or utility yard					P27	P27	P27	P27			P		P
*	Public agency archives											P	P	P
921	Court										P4	P	P	
9221	Police Facility					P7	P7	P7	P7	P7	P	P	P	P
9224	Fire Facility					C6 and 33	C6	C6	C6	P	P	P	P	P
*	Utility Facility		P29 C28	P29 C28	P29 C28	P29 C28 and 33	P29 C28	P29 C28	P29 C28	P	P	P	P	P
*	Commuter Parking Lot					C 33 P19	C P19	C P19	C 19	P	P	P	P	P35
*	Private Stormwater Management Facility		P8	P8	P8	P8	P8	P8	P8	P8	P8	P8	P8	P8
*	Vactor Waste Receiving Facility		P	P	P	P18	P18	P18	P18	P31	P31	P31	P31	P
	BUSINESS SERVICES:													
*	Construction and Trade					P34						P	P9	P
*	Individual Transportation and Taxi										P25	P	P10	P
421	Trucking and Courier Service										P11	P12	P13	P
*	Warehousing, (1) and Wholesale Trade													P
*	Self-service Storage								P14	P37	P	P	P	P
4221 4222	Farm Product Warehousing, Refrigeration and Storage		P15 C36			P15 and 33 C36	P15, C36							P
*	Log Storage		P15	P		P26 and 33								P
47	Transportation Service													P
473	Freight and Cargo Service											P	P	P

472	Passenger Transportation Service									P	P	P	
48	Communication Offices										P	P	P
482	Telegraph and other Communications									P	P	P	P
*	General Business Service								P	P	P	P	P16
*	Professional Office								P	P	P	P	P16
7312	Outdoor Advertising Service										P	P17	P
735	Miscellaneous Equipment Rental									P17	P	P17	P
751	Automotive Rental and Leasing									P	P		P
752	Automotive Parking								P20a	P20b	P21	P20a	P
*	Off-Street Required Parking Lot				P32	P32	P32	P32	P32	P32	P32	P32	P32
7941	Professional Sport Teams/Promoters										P	P	
873	Research, Development and Testing										P2	P2	P2
*	Heavy Equipment and Truck Repair												P
	ACCESSORY USES:												
*	Commercial/Industrial Accessory Uses			P	P22				P22	P22	P	P	P
*	Helistop					C23	C2	C23	C23	C23	C2	C23	C2
GENERAL CROSS REFERENCE	Land Use Table Instructions, see K.C.C. 21A.08.020 and 21A.02.070; Development Standards, see chapters 21A.12 through 21A.30; General Provisions, see K.C.C. chapters 21A.32 through 21A.38; Application and Review Procedures, see K.C.C. chapters 21A.40 through 21A.44; (*) Definition of this specific land use, see K.C.C. chapter 21A.06.												

B. Development conditions.

1. Except self-service storage.

2. Except SIC Industry No. 8732-Commercial Economic, Sociological, and Educational Research, see general business service/office.

3.a. Only as a reuse of a public school facility or a surplus nonresidential facility subject to K.C.C. chapter 21A.32; or

b. only when accessory to a fire facility and the office is no greater than one thousand five hundred square feet of floor area.

4. Only as a reuse of a surplus nonresidential facility subject to K.C.C. chapter 21A.32.

5. New utility office locations only if there is no commercial/industrial zoning in the utility district, and not in the RA-10 or RA-20 zones unless it is demonstrated that no feasible alternative location is possible, and provided further that this condition applies to the UR zone only if the property is located within a designated unincorporated Rural Town.

6.a. All buildings and structures shall maintain a minimum distance of twenty feet from property lines adjoining rural area and residential zones;

b. Any buildings from which fire-fighting equipment emerges onto a street shall maintain a distance of thirty-five feet from such street;

c. No outdoor storage; and

d. Excluded from the RA-10 and RA-20 zones unless it is demonstrated that no feasible alternative location is possible.

7. Limited to storefront police offices. Such offices shall not have:

a. holding cells;

b. suspect interview rooms (except in the NB zone); [or]**

c. long-term storage of stolen properties.

8. Private stormwater management facilities serving development proposals located on commercial/industrial zoned lands shall also be located on commercial/industrial lands, unless participating in an approved shared facility drainage

plan. Such facilities serving development within an area designated urban in the King County Comprehensive Plan shall only be located in the urban area.

9. No outdoor storage of materials.

10. Limited to office uses.

11. Limited to self-service household moving truck or trailer rental accessory to a gasoline service station.

12. Limited to self-service household moving truck or trailer rental accessory to a gasoline service station and SIC Industry No. 4215-Courier Services, except by air.

13. Limited to SIC Industry No. 4215-Courier Services, except by air.

14. Accessory to an apartment development of at least twelve units provided:

a. The gross floor area in self service storage shall not exceed the total gross floor area of the apartment dwellings on the site;

b. All outdoor lights shall be deflected, shaded and focused away from all adjoining property;

c. The use of the facility shall be limited to dead storage of household goods;

d. No servicing or repair of motor vehicles, boats, trailers, lawn mowers or similar equipment;

e. No outdoor storage or storage of flammable liquids, highly combustible or explosive materials or hazardous chemicals;

f. No residential occupancy of the storage units;

g. No business activity other than the rental of storage units; and

h. A resident director shall be required on the site and shall be responsible for maintaining the operation of the facility in conformance with the conditions of approval.

i. Before filing an application with the department, the applicant shall hold a community meeting in accordance with K.C.C. 20.20.035.

15.a. The floor area devoted to warehousing, refrigeration or storage shall not exceed two thousand square feet;

b. Structures and areas used for warehousing, refrigeration and storage shall maintain a minimum distance of seventy-five feet from property lines adjoining rural area and residential zones; and

c. Warehousing, refrigeration and storage is limited to agricultural products and sixty percent or more of the products must be grown or processed in the Puget Sound counties. At the time of the initial application, the applicant shall submit a projection of the source of products to be included in the warehousing, refrigeration or storage.

16. Only as an accessory use to another permitted use.

17. No outdoor storage.

18. Only as an accessory use to a public agency or utility yard, or to a transfer station.

19. Limited to new commuter parking lots designed for thirty or fewer parking spaces or commuter parking lots located on existing parking lots for churches, schools, or other permitted nonresidential uses that have excess capacity available during commuting; provided that the new or existing lot is adjacent to a designated arterial that has been improved to a standard acceptable to the department of transportation;

20.a. No tow-in lots for damaged, abandoned or otherwise impounded vehicles,
and

b. Tow-in lots for damaged, abandoned or otherwise impounded vehicles shall be:

(1) permitted only on parcels located within Vashon Town Center;

(2) accessory to a gas or automotive service use; and

(3) limited to no more than ten vehicles.

21. No dismantling or salvage of damaged, abandoned or otherwise impounded vehicles.

22. Storage limited to accessory storage of commodities sold at retail on the premises or materials used in the fabrication of commodities sold on the premises.

23. Limited to emergency medical evacuation sites in conjunction with police, fire or health service facility. Helistops are prohibited from the UR zone only if the property is located within a designated unincorporated Rural Town.

24. Allowed as accessory to an allowed use.

25. Limited to private road ambulance services with no outside storage of vehicles.

26. Limited to two acres or less.

27a. Utility yards only on sites with utility district offices; or

b. Public agency yards are limited to material storage for road maintenance facilities.

28. Limited to bulk gas storage tanks that pipe to individual residences but excluding liquefied natural gas storage tanks.

29. Excluding bulk gas storage tanks.

30. For I-zoned sites located outside the urban growth area designated by the King County Comprehensive Plan, uses shall be subject to the provisions for rural industrial uses in K.C.C. chapter 21A.12.

31. Vactor waste treatment, storage and disposal shall be limited to liquid materials. Materials shall be disposed of directly into a sewer system, or shall be stored in tanks (or other covered structures), as well as enclosed buildings.

32. Provided:

a. Off-street required parking for a land use located in the urban area must be located in the urban area;

b. Off-street required parking for a land use located in the rural area must be located in the rural area; and

c.(1) Except as provided in subsection B.32.c.(2) of this subsection, off-street required parking must be located on a lot that would permit, either outright or through a land use permit approval process, the land use the off-street parking will serve.

(2) For a social service agency allowed under K.C.C. 21A.08.050B.13.b. to be located on a site in the NB zone, off-street required parking may be located on a site within three hundred feet of the social service agency, regardless of zoning classification of the site on which the parking is located.

33. Subject to review and approval of conditions to comply with trail corridor provisions of K.C.C. chapter 21A.14 when located in an RA zone.

34. Limited to landscape and horticultural services (SIC 078) that are accessory to a retail nursery, garden center and farm supply store. Construction equipment for the accessory use shall not be stored on the premises.

35. Allowed as a primary or accessory use to an allowed industrial-zoned land use.

36. Accessory to agricultural uses provided:

a. In the RA zones and on lots less than thirty-five acres in the A zone, the floor area devoted to warehousing, refrigeration or storage shall not exceed three thousand five hundred square feet unless located in a building designated as historic resource under K.C.C. chapter 20.62;

b. On lots at least thirty-five acres in the A zones, the floor area devoted to warehousing, refrigeration or storage shall not exceed seven thousand square feet unless located in a building designated as historic resource under K.C.C. chapter 20.62.

c. In the A zones, structures and areas used for warehousing, refrigeration and storage shall be located on portions of agricultural lands that are unsuitable for

other agricultural purposes, such as areas within the already developed portion of such agricultural lands that are not available for direct agricultural production, or areas without prime agricultural soils;

d. Structures and areas used for warehousing, refrigeration or storage shall maintain a minimum distance of seventy-five feet from property lines adjoining rural area and residential zones; and

e. Warehousing, refrigeration and storage is limited to agricultural products and sixty percent or more of the products must be grown or processed in the Puget Sound counties. At the time of the initial application, the applicant shall submit a projection of the source of products to be included in the warehousing, refrigeration or storage.

37. Use shall be limited to the NB zone on parcels outside of the Urban Growth Area, Rural Towns and Rural Neighborhoods and the building floor area devoted to such use shall not exceed ten thousand square feet. (Ord. 17841 § 27, 2014: Ord. 17539 § 29, 2013: Ord. 16950 § 17, 2010: Ord. 16594 § 2, 2009: Ord. 16267 § 79, 2008: Ord. 15974 § 8, 2007: Ord. 15606 § 14, 2006: Ord. 15245 § 6, 2005: Ord. 15032 § 13, 2004: Ord. 14254 § 1, 2001: Ord. 14045 § 13, 2001: Ord. 13278 § 5, 1998: Ord. 13190 § 15, 1998: Ord. 13022 § 13, 1998: Ord. 12596 § 6, 1997: Ord. 12243 § 2, 1996: Ord. 12018 § 3, 1995: Ord. 11621 § 37, 1994: Ord. 11157 § 13, 1993: Ord. 10870 § 333, 1993).

****Reviser's note: Language added but not underlined in Ordinance 16950. See K.C.C. 1.24.075.**

21A.08.070 Retail land uses.

A. Retail land uses.

KEY			RESOURCE			RURAL	RESIDENTIAL				COMMERCIAL/INDUSTRIAL						
P-Permitted Use **C**-Conditional Use **S**-Special Use		ZONE	AGRICULTURE	FOREST	MINERAL	RURAL AREA	URBAN	RESERVE	URBAN	RESIDENTIAL	NEIGHBORHOOD	BUSINESS	COMMUNITY	BUSINESS	REGIONAL	BUSINESS	OFFICE	INDUSTRIAL
SIC#	**SPECIFIC LAND USE**		**A**	**F**	**M**	**RA**	**UR**	**R1-8**		**R12-48**	**NB**		**CB**		**RB**		**O**	**I (30)**
*	Building Materials and Hardware Stores			P23							P2		P		P			
*	Retail Nursery, Garden Center and Farm Supply Stores		P1 C1			P1 C1					P		P		P			
*	Forest Products Sales		P3 and 4	P4		P3 and 4									P			
*	Department and Variety Stores							C14a		P14	P5		P		P			
54	Food Stores							C15a		P15	P		P		P		C	P6
*	Agricultural Product Sales		P7 C7	P4		P7 C7	P3	P3		P25	P25		P25		P25		P25	P25
*	Farmers Market		P24	P24		P24	P24	P24		P24	P24		P24		P24		P24	P24
*	Motor Vehicle and Boat Dealers														P8			P

553	Auto Supply Stores									P9	P9		P
554	Gasoline Service Stations								P	P	P		P
56	Apparel and Accessory Stores									P	P		
*	Furniture and Home Furnishings Stores									P	P		
58	Eating and Drinking Places				P21 C19		P20 C16	P20 P16	P10	P	P	P	P
*	Drug Stores						C15	P15	P	P	P	C	
*	Recreational marijuana retailer									P26 C27	P26 C27		
592	Liquor Stores	P13			P13	P13			P13	P	P		
593	Used Goods: Antiques/ Secondhand Shops									P	P		
*	Sporting Goods and Related Stores			P22	P22	P22	P22	P22	P22	P	P	P22	P22
*	Book, Stationery, Video and Art Supply Stores						C15a	P15	P	P	P		
*	Jewelry Stores									P	P		
*	Monuments, Tombstones, and Gravestones										P		
*	Hobby, Toy, Game Shops								P	P	P		
*	Photographic and Electronic Shops								P	P	P		
*	Fabric Shops									P	P		
598	Fuel Dealers									C11	P		P
*	Florist Shops						C15a	P15	P	P	P	P	
*	Personal Medical Supply Stores									P	P		
*	Pet Shops								P	P	P		
*	Bulk Retail									P	P		
*	Auction Houses										P12		P
*	Livestock Sales	P17	P17		P17	P17	P17 and 18						P
GENERAL CROSS REFERENCES:	Land Use Table Instructions, see K.C.C. 21A.08.020 and 21A.02.070; Development Standards, see K.C.C. chapters 21A.12 through 21A.30; General Provisions, see K.C.C. chapters 21A.32 through 21A.38; Application and Review Procedures, see K.C.C. chapters 21A.40 through 21A.44; (*)Definition of this specific land use, see K.C.C. chapter 21A.06.												

B. Development conditions.

1.a. As a permitted use, covered sales areas shall not exceed a total area of two thousand square feet, unless located in a building designated as historic resource under K.C.C. chapter 20.62. With a conditional uses permit, covered sales areas of up to three thousand five hundred square feet may be allowed. Greenhouses used for the display of merchandise other than plants shall be considered part of the covered sales area. Uncovered outdoor areas used to grow or display trees, shrubs, or other plants are not considered part of the covered sales area;

b. The site area shall be at least four and one-half acres;

c. Sales may include locally made arts and crafts; and

d. Outside lighting is permitted if no off-site glare is allowed.

2. Only hardware stores.

3.a. Limited to products grown on site.

b. Covered sales areas shall not exceed a total area of five hundred square feet.

4. No permanent structures or signs.

5. Limited to SIC Industry No. 5331-Variety Stores, and further limited to a maximum of two thousand square feet of gross floor area.

6. Limited to a maximum of five thousand square feet of gross floor area.

7.a. As a permitted use, the covered sales area shall not exceed two thousand square feet, unless located in a building designated as a historic resource under K.C.C. chapter 20.62. As a conditional use, up to three thousand five hundred square feet of covered sales area may be allowed;

b. The site area shall be at least four and one-half acres;

c. Forty percent or more of the gross sales of agricultural product sold through the store must be sold by the producers of primary agricultural products;

d. Sixty percent or more of the gross sales of agricultural products sold through the store shall be derived from products grown or produced in the Puget Sound counties. At the time of the initial application, the applicant shall submit a reasonable projection of the source of product sales;

e. Sales shall be limited to agricultural products and locally made arts and crafts;

f. Storage areas for agricultural products may be included in a farm store structure or in any accessory building; and

g. Outside lighting is permitted if no off-site glare is allowed.

8. Excluding retail sale of trucks exceeding one-ton capacity.

9. Only the sale of new or reconditioned automobile supplies is permitted.

10. Excluding SIC Industry No. 5813-Drinking Places.

11. No outside storage of fuel trucks and equipment.

12. Excluding vehicle and livestock auctions.

13. Only as accessory to a winery or SIC Industry No. 2082-Malt Beverages, and limited to sales of products produced on site and incidental items where the majority of sales are generated from products produced on site.

14.a. Not in R-1 and limited to SIC Industry No. 5331-Variety Stores, limited to a maximum of five thousand square feet of gross floor area, and subject to K.C.C. 21A.12.230; and

b. Before filing an application with the department, the applicant shall hold a community meeting in accordance with K.C.C. 20.20.035.

15.a. Not permitted in R-1 and limited to a maximum of five thousand square feet of gross floor area and subject to K.C.C. 21A.12.230; and

b. Before filing an application with the department, the applicant shall hold a community meeting in accordance with K.C.C. 20.20.035.

16.a. Not permitted in R-1 and excluding SIC Industry No. 5813-Drinking Places, and limited to a maximum of five thousand square feet of gross floor area and subject to K.C.C. 21A.12.230, except as provided in subsection B.20. of this section; and

b. Before filing an application with the department, the applicant shall hold a community meeting in accordance with K.C.C. 20.20.035.

17. Retail sale of livestock is permitted only as accessory to raising livestock.

18. Limited to the R-1 zone.

19. Only as:

a. an accessory use to a permitted manufacturing or retail land use, limited to espresso stands to include sales of beverages and incidental food items, and not to include drive-through sales; or

b. an accessory use to a recreation or multiuse park, limited to a total floor area of three thousand five hundred square feet.

20. Only as:

a. an accessory use to a recreation or multiuse park; or

b. an accessory use to a park and limited to a total floor area of one thousand five hundred square feet.

21. Accessory to a park, limited to a total floor area of seven hundred fifty square feet.

22. Only as an accessory use to:

a. a large active recreation and multiuse park in the urban growth area; or

b. a park, or a recreation or multiuse park in the RA zones, and limited to a total floor area of seven hundred and fifty square feet.

23. Only as accessory to SIC Industry Group No. 242-Sawmills and SIC Industry No. 2431-Millwork and;

a. limited to lumber milled on site; and

b. the covered sales area is limited to two thousand square feet. The covered sales area does not include covered areas used to display only milled lumber.

24. Requires at least five farmers selling their own products at each market and the annual value of sales by farmers should exceed the annual sales value of nonfarmer vendors.

25. Limited to sites located within the urban growth area and:

a. The sales area shall be limited to three hundred square feet and must be removed each evening;

b. There must be legal parking that is easily available for customers; and

c. The site must be in an area that is easily accessible to the public, will accommodate multiple shoppers at one time and does not infringe on neighboring properties.

26. Per parcel, limited to a maximum aggregated total of two thousand square feet of gross floor area devoted to, and in support of, the retail sale of marijuana.

27. Per parcel, limited to a maximum aggregated total of five thousand square feet gross floor area devoted to, and in support of, the retail sale of marijuana. (Ord. 17841 § 28, 2014: Ord. 17710 § 7, 2013: Ord. 17539 § 30, 2013: Ord. 17191 § 33, 2011: Ord. 16950 § 18, 2010: Ord. 16267 § 22, 2008: Ord. 15974 § 9, 2007: Ord. 15606 § 15, 2006: Ord. 15032 § 14, 2004: Ord. 14807 § 6, 2003: Ord. 14781 § 1, 2003: Ord. 14045 § 14, 2001: Ord. 13546 § 4, 1999: Ord. 13022 § 14, 1998: Ord. 12596 § 7, 1997: Ord. 10870 § 334, 1993).

21A.08.080 Manufacturing land uses.

A. Manufacturing land uses.

KEY			RESOURCE			RURAL	RESIDENTIAL				COMMERCIAL/INDUSTRIAL						
P-Permitted Use **C**-Conditional Use **S**-Special Use		ZONE	AGRICULTURE	FOREST	MINERAL	RURAL AREA	URBAN RESERVE		URBAN	RESIDENTIAL	NEIGHBORHOOD	BUSINESS	COMMUNITY	BUSINESS	REGIONAL	BUSINESS	OFFICE	INDUSTRIAL
SIC #	**SPECIFIC LAND USE**		**A**	**F**	**M**	**RA**	**UR**		**R1-8**	**R12-48**	**NB**		**CB**		**RB**		**O**	**I (11)**
20	Food and Kindred Products		P1 C1	P1		P1 C1	P1				P2		P2		P2 C			P2 C
*/2082 /2085	Winery/Brewery /Distillery		P3 C12			P3 C12	P3				P17		P17		P			P
*	Materials Processing Facility			P13 C	P14 C15	P16 C												P
22	Textile Mill Products																	C
23	Apparel and other Textile Products														C			P

24	Wood Products, except furniture	P4 P18	P4 P18 C5		P4 P18 C5	P4					C6		P
25	Furniture and Fixtures		P19		P19						C		P
26	Paper and Allied Products												C
27	Printing and Publishing								P7	P7	P7C	P7C	P
*	Recreational marijuana Processor I	P20			P20					P21 C22	P21 C22		
*	Recreational marijuana Processor II									P23 C24	P23 C24		P25 C26
28	Chemicals and Allied Products												C
2911	Petroleum Refining and Related Industries												C
30	Rubber and Misc. Plastics Products												C
31	Leather and Leather Goods										C		P
32	Stone, Clay, Glass and Concrete Products									P6	P9		P
33	Primary Metal Industries												C
34	Fabricated Metal Products												P
35	Industrial and Commercial Machinery												P
351-55	Heavy Machinery and Equipment												C
357	Computer and Office Equipment										C	C	P
36	Electronic and other Electric Equipment										C		P
374	Railroad Equipment												C
376	Guided Missile and Space Vehicle Parts												C
379	Miscellaneous Transportation Vehicles												C
38	Measuring and Controlling Instruments										C	C	P
39	Miscellaneous Light Manufacturing										C		P
*	Motor Vehicle and Bicycle Manufacturing												C
*	Aircraft, Ship and Boat Building												P10C
7534	Tire Retreading										C		P
781-82	Movie Production/Distribution										P		P
GENERAL CROSS REFERENCES:	Land Use Table Instructions, see K.C.C. 21A.08.020 and 21A.02.070; Development Standards, see K.C.C. chapters 21A.12 through 21A.30; General Provisions, see K.C.C. chapters 21A.32 through 21A.38 Application and Review Procedures, see K.C.C. chapters 21A.40 through 21A.44; (*)Definition of this specific land use, see K.C.C. chapter 21A.06												

B. Development conditions.

1.a. Excluding wineries and SIC Industry No. 2082-Malt Beverages;

b. In the A zone, only allowed on sites where the primary use is SIC industry Group No. 01-Growing Harvesting Crops or No. 02-Raising Livestock and Small Animals;

c. In the RA and UR zones, only allowed on lots of at least four and one-half acres and only when accessory to an agricultural use;

d.(1) Except as provided in subsection B.1.d.(2) and B.1.d.(3) of this section, the floor area devoted to all processing shall not exceed three thousand five hundred square feet, unless located in a building designated as historic resource under K.C.C. chapter 20.62;

(2) With a conditional use permit, up to five thousand square feet of floor area may be devoted to all processing; and

(3) In the A zone, on lots thirty-five acres or greater, the floor area devoted to all processing shall not exceed seven thousand square feet, unless located in a building designated as historic resource under K.C.C. chapter 20.62;

e. Structures and areas used for processing shall maintain a minimum distance of seventy-five feet from property lines adjoining rural area and residential zones, unless located in a building designated as historic resource under K.C.C. chapter 20.62;

f. Processing is limited to agricultural products and sixty percent or more of the products processed must be grown in the Puget Sound counties. At the time of initial application, the applicant shall submit a projection of the source of products to be produced;

g. In the A zone, structures used for processing shall be located on portions of agricultural lands that are unsuitable for other agricultural purposes, such as areas within the already developed portion of such agricultural lands that are not available for direct agricultural production, or areas without prime agricultural soils; and

h. Tasting of products produced on site may be provided in accordance with state law. The area devoted to tasting shall be included in the floor area limitation in subsection B.1.d. of this section.

2. Except slaughterhouses.

3.a. Limited to wineries, SIC Industry No. 2082-Malt Beverages and SIC Industry No. 2085-Distilled and Blended Liquors;

b. In the A zone, only allowed on sites where the primary use is SIC Industry Group No. 01-Growing and Harvesting Crops or No. 02-Raising Livestock and Small Animals;

c. In the RA and UR zones, only allowed on lots of at least four and one-half acres;

d. The floor area devoted to all processing shall not exceed three thousand five hundred square feet, unless located in a building designated as historic resource under K.C.C. chapter 20.62;

e. Structures and areas used for processing shall maintain a minimum distance of seventy-five feet from property lines adjoining rural area and residential zones, unless located in a building designated as historic resource under K.C.C. chapter 20.62;

f. Sixty percent or more of the products processed must be grown in the Puget Sound counties. At the time of the initial application, the applicant shall submit a projection of the source of products to be produced; and

g. Tasting of products produced on site may be provided in accordance with state law. The area devoted to tasting shall be included in the floor area limitation in subsection B.3.c. of this section.

4. Limited to rough milling and planing of products grown on-site with portable equipment.

5. Limited to SIC Industry Group No. 242-Sawmills and SIC Industry No. 2431-Millwork. For RA zoned sites, if using lumber or timber grown off-site, the minimum site area is four and one-half acres.

6. Limited to uses found in SIC Industry No. 2434-Wood Kitchen Cabinets and No. 2431-Millwork, (excluding planing mills).

7. Limited to photocopying and printing services offered to the general public.

8. Only within enclosed buildings, and as an accessory use to retail sales.

9. Only within enclosed buildings.

10. Limited to boat building of craft not exceeding forty-eight feet in length.

11. For I-zoned sites located outside the urban growth area designated by the King County Comprehensive Plan, uses shown as a conditional use in the table of K.C.C. 21A.08.080.A. shall be prohibited, and all other uses shall be subject to the provisions for rural industrial uses as set forth in K.C.C. chapter 21A.12.

12.a. Limited to wineries, SIC Industry No. 2082-Malt Beverages and SIC Industry No. 2085-Distilled and Blended Liquors;

b.(1) Except as provided in subsection B.12.b.(2) of this section, the floor area of structures for wineries, breweries and distilleries and any accessory uses shall not exceed a total of eight thousand square feet. The floor area may be increased by up to an additional eight thousand square feet of underground storage that is constructed completely below natural grade, not including required exits and access points, if the underground storage is at least one foot below the surface and is not visible above ground; and

(2) On Vashon-Maury Island, the total floor area of structures for wineries, breweries and distilleries and any accessory uses may not exceed six thousand square feet, including underground storage;

c. Wineries, breweries and distilleries shall comply with Washington state Department of Ecology and King County board of health regulations for water usage and wastewater disposal. Wineries, breweries and distilleries using water from exempt wells shall install a water meter;

d. Off-street parking is limited to one hundred and fifty percent of the minimum requirement for wineries, breweries or distilleries specified in K.C.C. 21A.18.030;

e. Structures and areas used for processing shall be set back a minimum distance of seventy-five feet from property lines adjacent to rural area and residential zones, unless the processing is located in a building designated as historic resource under K.C.C. chapter 20.62;

f. The minimum site area is four and one-half acres. If the total floor area of structures for wineries, breweries and distilleries and any accessory uses exceed six thousand square feet, including underground storage:

(1) the minimum site area is ten acres; and

(2) a minimum of two and one-half acres of the site shall be used for the growing of agricultural products;

g. The facility shall be limited to processing agricultural products and sixty percent or more of the products processed must be grown in the Puget Sound counties. At the time of the initial application, the applicant shall submit a projection of the source of products to be processed; and

h. Tasting of products produced on site may be provided in accordance with state law. The area devoted to tasting shall be included in the floor area limitation in subsection B.12.b. of this section.

13. Only on the same lot or same group of lots under common ownership or documented legal control, which includes, but is not limited to, fee simple ownership, a long-term lease or an easement:

a. as accessory to a primary forestry use and at a scale appropriate to process the organic waste generated on the site; or

b. as a continuation of a sawmill or lumber manufacturing use only for that period to complete delivery of products or projects under contract at the end of the sawmill or lumber manufacturing activity.

14. Only on the same lot or same group of lots under common ownership or documented legal control, which includes, but is not limited to, fee simple ownership, a long-term lease or an easement:

a. as accessory to a primary mineral use; or

b. as a continuation of a mineral processing use only for that period to complete delivery of products or projects under contract at the end of mineral extraction.

15. Continuation of a materials processing facility after reclamation in accordance with an approved reclamation plan.

16. Only a site that is ten acres or greater and that does not use local access streets that abut lots developed for residential use.

17.a. Limited to wineries, SIC Industry No. 2082-Malt Beverages and SIC Industry No. 2085-Distilled and Blended Liquors;

b. The floor area devoted to all processing shall not exceed three thousand five hundred square feet, unless located in a building designated as historic resource under K.C.C. chapter 20.62;

c. Structures and areas used for processing shall maintain a minimum distance of seventy-five feet from property lines adjoining rural area and residential zones, unless located in a building designated as historic resource under K.C.C. chapter 20.62; and

d. Tasting of products produced on site may be provided in accordance with state law. The area devoted to tasting shall be included in the floor area limitation in subsection B.18.b. of this section.

18. Limited to:

a. SIC Industry Group No. 242-Sawmills and SIC Industry No. 2431-Millwork, as follows:

(1) If using lumber or timber grown off-site, the minimum site area is four and one-half acres;

(2) The facility shall be limited to an annual production of no more than one hundred fifty thousand board feet;

(3) Structures housing equipment used in the operation shall be located at least one-hundred feet from adjacent properties with residential or rural area zoning;

(4) Deliveries and customer visits shall be limited to the hours of 8:00 a.m. to 7:00 p.m. on weekdays, and 9:00 a.m. to 5:00 p.m. on weekends;

(6) In the RA zone, the facility's driveway shall have adequate entering sight distance required by the 2007 King County Road Design and Construction Standards. An adequate turn around shall be provided on-site to prevent vehicles from backing out on to the roadway that the driveway accesses; and

(7) Outside lighting is limited to avoid off-site glare; and

b. SIC Industry No. 2411-Logging.

19. Limited to manufacture of custom made wood furniture or cabinets.

20.a. Only allowed on lots of at least four and one-half acres;

b. Only as an accessory use to a Washington state Liquor Control Board licensed marijuana production facility on the same lot; and

c. Accessory marijuana processing uses allowed under this section are subject to all limitations applicable to marijuana production uses under K.C.C. 21A.08.090.

21.a. Only in the CB and RB zones located outside the urban growth area; and

b. Per parcel, the aggregated total gross floor area devoted to the use of, and in support of, processing marijuana together with any separately authorized production of marijuana shall be limited to a maximum of two thousand square feet; and

c. If the two thousand square foot per parcel threshold is exceeded, each and every marijuana-related entity occupying space in addition to the two thousand square foot threshold area on that parcel shall obtain a conditional use permit as set forth in subsection B.23. of this section.

22.a. Only in the CB and RB zones located outside the urban growth area; and

b. Per parcel, the aggregated total gross floor area devoted to the use of, and in support of, processing marijuana together with any separately authorized production of marijuana shall be limited to a maximum of thirty thousand square feet.

23.a. Only in the CB and RB zones located inside the urban growth area; and

b. Per parcel, the aggregated total gross floor area devoted to the use of, and in support of, processing marijuana together with any separately authorized production of marijuana shall be limited to a maximum of two thousand square feet; and

c. If the two thousand square foot per parcel threshold is exceeded, each and every marijuana-related entity occupying space in addition to the two thousand square foot threshold area on that parcel shall obtain a conditional use permit as set forth in subsection B.25. of this section.

24. a. Only in the CB and RB zones located inside the urban growth area; and

b. Per parcel, the aggregated total gross floor area devoted to the use of, and in support of, processing marijuana together with any separately authorized production of marijuana shall be limited to a maximum of thirty thousand square feet.

25. Per parcel, limited to a maximum aggregate total of two thousand square feet of gross floor area devoted to, and in support of, the processing of marijuana together with any separately authorized production of marijuana.

26. Per parcel, limited to a maximum aggregate total of thirty thousand square feet of gross floor area devoted to, and in support of, the processing of marijuana together with any separately authorized production of marijuana. (Ord. 17841 § 29, 2014: Ord. 17725 § 2, 2013: Ord. 17710 § 8, 2013: Ord. 17539 § 31, 2013: Ord. 16950 § 19, 2010: Ord. 16028 § 1, 2008: Ord. 15974 § 10, 2007: Ord. 15032 § 15, 2004: Ord. 14781 § 2, 2003: Ord. 14045 § 15, 2001: Ord. 12596 § 8, 1997: Ord. 11621 § 38, 1994: Ord. 10870 § 335, 1993).

21A.08.090 Resource land uses.

A. Resource land uses.

KEY		ZONE	RESOURCE			RURAL	RESIDENTIAL			COMMERCIAL/INDUSTRIAL				
P-Permitted Use **C**-Conditional Use **S**-Special Use			AGRICULTURE	FOREST	MINERAL	RURAL AREA	URBAN RESERVE	URBAN	RESIDENTIAL	NEIGHBORHOOD BUSINESS	COMMUNITY BUSINESS	REGIONAL BUSINESS	OFFICE	INDUSTRIAL
SIC#	**SPECIFIC LAND USE**		**A**	**F**	**M**	**RA**	**UR**	**R1-8**	**R12-48**	**NB**	**CB**	**RB**	**O**	**I**
	AGRICULTURE:													
01	Growing and Harvesting Crops		P	P		P	P	P						P
02	Raising Livestock and Small Animals (6)		P	P		P	P							P
*	Recreational marijuana producer		P15 C22			P16 C17					P18 C19	P18 C19		P20 C21
*	Agriculture Training Facility		C10											
*	Agriculture-related special needs camp		P12											
*	Agricultural Anaerobic Digester		P13											
	FORESTRY:													

08	Growing & Harvesting Forest Production	P	P	P7	P	P	P						P
*	Forest Research		P		P	P						P2	P
	FISH AND WILDLIFE MANAGEMENT:												
0921	Hatchery/Fish Preserve (1)	P	P		P	P	C						P
0273	Aquaculture (1)	P	P		P	P	C						P
*	Wildlife Shelters	P	P		P	P							
	MINERAL:												
10,12,14	Mineral Extraction and Processing		P9 C	P C11									
2951, 3271, 3273	Asphalt/Concrete Mixtures and Block		P8 C11	P8 C11									P
	ACCESSORY USES:												
*	Resource Accessory Uses	P3 P23	P4	P5	P3	P3							P4
*	Temporary Farm Worker Housing	P14	P14		P14								
GENERAL CROSS REFERENCES:	Land Use Table Instructions, see K.C.C. 21A.08.020 and 21A.02.070; Development Standards, see K.C.C. chapters 21A.12 through 21A.30; General Provisions, see K.C.C. chapters 21A.32 through 21A.38; Application and Review Procedures, see K.C.C. chapters 21A.40 through 21A.44; (*)Definition of this specific land use, see K.C.C. chapter 21A.06.												

B. Development conditions.

1. May be further subject to K.C.C. chapter 21A.25.
2. Only forest research conducted within an enclosed building.
3. Accessory dwelling units in accordance with K.C.C. 21A.08.030.
4. Excluding housing for agricultural workers.
5. Limited to either maintenance or storage facilities, or both, in conjunction with mineral extraction or processing operation.
6. Allowed in accordance with K.C.C. chapter 21A.30.
7. Only in conjunction with a mineral extraction site plan approved in accordance with K.C.C. chapter 21A.22.
8. Only on the same lot or same group of lots under common ownership or documented legal control, which includes, but is not limited to, fee simple ownership, a long-term lease or an easement:
   a. as accessory to a primary mineral extraction use;
   b. as a continuation of a mineral processing only for that period to complete delivery of products or projects under contract at the end of a mineral extraction; or
   c. for a public works project under a temporary grading permit issued in accordance with K.C.C. 16.82.152.
9. Limited to mineral extraction and processing:
   a. on a lot or group of lots under common ownership or documented legal control, which includes but is not limited to, fee simple ownership, a long-term lease or an easement;
   b. that are located greater than one-quarter mile from an established residence; and
   c. that do not use local access streets that abut lots developed for residential use.
10. Agriculture training facilities are allowed only as an accessory to existing agricultural uses and are subject to the following conditions:
   a. The impervious surface associated with the agriculture training facilities shall comprise not more than ten percent of the allowable impervious surface permitted under K.C.C. 21A.12.040;

b. New or the expansion of existing structures, or other site improvements, shall not be located on class 1, 2 or 3 soils;

c. The director may require reuse of surplus structures to the maximum extent practical;

d. The director may require the clustering of new structures with existing structures;

e. New structures or other site improvements shall be set back a minimum distance of seventy-five feet from property lines adjoining rural area and residential zones;

f. Bulk and design of structures shall be compatible with the architectural style of the surrounding agricultural community;

g. New sewers shall not be extended to the site;

h. Traffic generated shall not impede the safe and efficient movement of agricultural vehicles, nor shall it require capacity improvements to rural roads;

i. Agriculture training facilities may be used to provide educational services to the surrounding rural/agricultural community or for community events. Property owners may be required to obtain a temporary use permit for community events in accordance with K.C.C. chapter 21A.32;

j. Use of lodging and food service facilities shall be limited only to activities conducted in conjunction with training and education programs or community events held on site;

k. Incidental uses, such as office and storage, shall be limited to those that directly support education and training activities or farm operations; and

l. The King County agriculture commission shall be notified of and have an opportunity to comment upon all proposed agriculture training facilities during the permit process in accordance with K.C.C. chapter 21A.40.

11. Continuation of mineral processing and asphalt/concrete mixtures and block uses after reclamation in accordance with an approved reclamation plan.

12.a. Activities at the camp shall be limited to agriculture and agriculture-oriented activities. In addition, activities that place minimal stress on the site's agricultural resources or activities that are compatible with agriculture are permitted.

(1) passive recreation;

(2) training of individuals who will work at the camp;

(3) special events for families of the campers; and

(4) agriculture education for youth.

b. Outside the camp center, as provided for in subsection B.12.e. of this section, camp activities shall not preclude the use of the site for agriculture and agricultural related activities, such as the processing of local food to create value-added products and the refrigeration and storage of local agricultural products. The camp shall be managed to coexist with agriculture and agricultural activities both onsite and in the surrounding area.

c. A farm plan shall be required for commercial agricultural production to ensure adherence to best management practices and soil conservation.

d.(1) The minimum site area shall be five hundred acres. Unless the property owner has sold or transferred the development rights as provided in subsection B.12.c.(3) of this section, a minimum of five hundred acres of the site must be owned by a single individual, corporation, partnership or other legal entity and must remain under the ownership of a single individual, corporation, partnership or other legal entity for the duration of the operation of the camp.

(2) Nothing in subsection B.12.d.(1) of this section prohibits the property owner from selling or transferring the development rights for a portion or all of the site to the King County farmland preservation program or, if the development rights are

extinguished as part of the sale or transfer, to a nonprofit entity approved by the director;

e. The impervious surface associated with the camp shall comprise not more than ten percent of the allowable impervious surface permitted under K.C.C. 21A.12.040;

f. Structures for living quarters, dining facilities, medical facilities and other nonagricultural camp activities shall be located in a camp center. The camp center shall be no more than fifty acres and shall depicted on a site plan. New structures for nonagricultural camp activities shall be clustered with existing structures;

g. To the extent practicable, existing structures shall be reused. The applicant shall demonstrate to the director that a new structure for nonagricultural camp activities cannot be practicably accommodated within an existing structure on the site, though cabins for campers shall be permitted only if they do not already exist on site;

h. Camp facilities may be used to provide agricultural educational services to the surrounding rural and agricultural community or for community events. If required by K.C.C. chapter 21A.32, the property owner shall obtain a temporary use permit for community events;

i. Lodging and food service facilities shall only be used for activities related to the camp or for agricultural education programs or community events held on site;

j. Incidental uses, such as office and storage, shall be limited to those that directly support camp activities, farm operations or agricultural education programs;

k. New nonagricultural camp structures and site improvements shall maintain a minimum set-back of seventy-five feet from property lines adjoining rural area and residential zones;

l. Except for legal nonconforming structures existing as of January 1, 2007, camp facilities, such as a medical station, food service hall and activity rooms, shall be of a scale to serve overnight camp users;

m. Landscaping equivalent to a type III landscaping screen, as provided for in K.C.C. 21A.16.040, of at least twenty feet shall be provided for nonagricultural structures and site improvements located within two hundred feet of an adjacent rural area and residential zoned property not associated with the camp;

n. New sewers shall not be extended to the site;

o. The total number of persons staying overnight shall not exceed three hundred;

p. The length of stay for any individual overnight camper, not including camp personnel, shall not exceed ninety days during a three-hundred-sixty-five-day period;

q. Traffic generated by camp activities shall not impede the safe and efficient movement of agricultural vehicles nor shall it require capacity improvements to rural roads;

r. If the site is adjacent to an arterial roadway, access to the site shall be directly onto the arterial unless the county road engineer determines that direct access is unsafe;

s. If direct access to the site is via local access streets, transportation management measures shall be used to minimize adverse traffic impacts;

t. Camp recreational activities shall not involve the use of motor vehicles unless the motor vehicles are part of an agricultural activity or are being used for the transportation of campers, camp personnel or the families of campers. Camp personnel may use motor vehicles for the operation and maintenance of the facility. Client-specific motorized personal mobility devices are allowed; and

u. Lights to illuminate the camp or its structures shall be arranged to reflect the light away from any adjacent property.

13. Limited to digester receiving plant and animal and other organic waste from agricultural activities, as follows:

a. the digester must be included as part of a Washington state Department of Agriculture approved dairy nutrient plan;

b. the digester must process at least seventy percent livestock manure or other agricultural organic material from farms in the vicinity, by volume;

c. imported organic waste-derived material, such as food processing waste, may be processed in the digester for the purpose of increasing methane gas production for beneficial use, but not shall exceed thirty percent of volume processed by the digester; and

d. the use must be accessory to an operating dairy or livestock operation.

14. Temporary farm worker housing subject to the following conditions:

a. The housing must be licensed by the Washington state Department of Health under chapter 70.114A RCW and chapter 246-358 WAC;

b. Water supply and sewage disposal systems must be approved by the Seattle King County department of health;

c. To the maximum extent practical, the housing should be located on nonfarmable areas that are already disturbed and should not be located in the floodplain or in a critical area or critical area buffer; and

d. The property owner shall file with the department of executive services, records and licensing services division, a notice approved by the department identifying the temporary farm worker housing as accessory and that the housing shall only be occupied by agricultural employees and their families while employed by the owner or operator. The notice shall run with the land.

15. Marijuana production by marijuana producers licensed by the Washington state Liquor Control Board is subject to the following standards:

a. Production is limited to outdoor, indoor within marijuana greenhouses, and within structures that are nondwelling unit structures that exist as of October 1, 2013, subject to the size limitations in subsection B.15.b. of this section;

b. Per parcel, the plant canopy, as defined in WAC 314-55-010, combined with any area used for processing under K.C.C. 21A.08.080 shall be limited to a maximum aggregated total of two thousand square feet and shall be located within a fenced area or marijuana greenhouse that is no more than ten percent larger than that combined area, or may occur in nondwelling unit structures that exist as of October 1, 2013; and

c. Outdoor production area fencing as required by the Washington state Liquor Control Board and marijuana greenhouses shall maintain a minimum street setback of fifty feet and a minimum interior setback of thirty feet.

16. Marijuana production by marijuana producers licensed by the Washington state Liquor Control Board is subject to the following standards:

a. Production is limited to outdoor, indoor within marijuana greenhouses, and within nondwelling unit structures that exist as of October 1, 2013, subject to the size limitations in subsection B.16.b. of this section;

b. Per parcel, the plant canopy, as defined in WAC 314-55-010, combined with any area used for processing under K.C.C. 21A.08.080 shall be limited to a maximum aggregated total of two thousand square feet and shall be located within a fenced area or marijuana greenhouse, that is no more than ten percent larger than that combined area, or may occur in nondwelling unit structures that exist as of October 1, 2013;

c. Only allowed on lots of at least four and one-half acres; and

d. Outdoor production area fencing as required by the Washington state Liquor Control Board and marijuana greenhouses shall maintain a minimum street setback of fifty feet and a minimum interior setback of thirty feet; and

e. If the two thousand square foot per parcel threshold of plant canopy within fenced areas or marijuana greenhouses is exceeded, each and every marijuana-related entity occupying space in addition to the two thousand square foot threshold area on that parcel shall obtain a conditional use permit as set forth in subsection B.17. of this section.

17. Marijuana production by marijuana producers licensed by the Washington state Liquor Control Board is subject to the following standards:

a. Production is limited to outdoor and indoor within marijuana greenhouses subject to the size limitations in subsection B.17.b. of this section;

b. Per parcel, the plant canopy, as defined in WAC 314-55-010, combined with any area used for processing under K.C.C. 21A.08.080 shall be limited to a maximum aggregated total of thirty thousand square feet and shall be located within a fenced area or marijuana greenhouse that is no more than ten percent larger than that combined area; and

c. Only allowed on lots of at least four and one-half acres.

18.a. Production is limited to indoor only; and

b. Per parcel, the plant canopy, as defined in WAC 314-55-010, combined with any area used for processing under K.C.C. 21A.08.080, shall be limited to a maximum aggregated total of two thousand square feet and shall be located within a building or tenant space that is no more than ten percent larger than the plant canopy and separately authorized processing area; and

c. If the two thousand square foot per parcel threshold is exceeded, each and every marijuana-related entity occupying space in addition to the two thousand square foot threshold area on that parcel shall obtain a conditional use permit as set forth in subsection B.19. of this section.

19.a. Production is limited to indoor only; and

b. Per parcel, the plant canopy, as defined in WAC 314-55-010, combined with any area used for processing under K.C.C. 21A.08.080, shall be limited to a maximum aggregated total of thirty thousand square feet and shall be located within a building or tenant space that is no more than ten percent larger than the plant canopy and separately authorized processing area.

20.a. Production is limited to indoor only;

b. Per parcel, the plant canopy, as defined in WAC 314-55-010, combined with any area used for processing under K.C.C. 21A.08.080, shall be limited to a maximum aggregated total of two thousand square feet and shall be located within a building or tenant space that is no more than ten percent larger than the plant canopy and separately authorized processing area.

21.a. Production is limited to indoor only;

b. Per parcel, the plant canopy, as defined in WAC 314-55-010, combined with any area used for processing under K.C.C. 21A.08.080, shall be limited to a maximum aggregated total of thirty thousand square feet and shall be located within a building or tenant space that is no more than ten percent larger than the plant canopy and separately authorized processing area.

22. Marijuana production by marijuana producers licensed by the Washington state Liquor Control Board is subject to the following standards:

a. Production is limited to outdoor, indoor within marijuana greenhouses, and within structures that are nondwelling unit structures that exist as of October 1, 2013, subject to the size limitations in subsection B.15.b. of this section;

b. Per parcel, the plant canopy, as defined in WAC 314-55-010, combined with any area used for processing under K.C.C. 21A.08.080 shall be limited to a maximum aggregated total of ten thousand square feet and shall be located within a fenced area or marijuana greenhouse that is no more than ten percent larger than that combined area, or may occur in nondwelling unit structures that exist as of October 1, 2013; and

c. Outdoor production area fencing as required by the Washington state Liquor Control Board and marijuana greenhouses shall maintain a minimum street setback of fifty feet and a minimum interior setback of thirty feet.

23. The storage and processing of non-manufactured source separated organic waste that originates from agricultural operations and that does not originate from the site, if:

a. agricultural is the primary use of the site;

b. the storage and processing are in accordance with best management practices included in an approved farm plan; and

c. except for areas used for manure storage, the areas used for storage and processing do not exceed three acres and ten percent of the site. (Ord. 17841 § 30, 2014: Ord. 17725 § 3, 2013: Ord. 17710 § 9, 2013: Ord. 17539 § 32, 2013: Ord. 16267 § 23, 2008: Ord. 15909 § 2, 2007: Ord. 15032 § 16, 2004: Ord. 14045 § 16, 2001: Ord. 12691 § 3, 1997: Ord. 12596 § 9, 1997: Ord. 11938 § 1, 1995: Ord. 11621 § 39, 1994: 11157 § 14, 1993: Ord. 10870 § 336, 1993).

21A.08.100 Regional land uses.

A. Regional land uses.

KEY			RESOURCE			RURAL	RESIDENTIAL			COMMERCIAL/INDUSTRIAL				
P-Permitted Use **C**-Conditional Use **S**-Special Use		ZONE	AGRICULTURE	FOREST	MINERAL	RURAL	URBAN RESERVE	URBAN	RESIDENTIAL	NEIGHBORHOOD BUSINESS	COMMUNITY BUSINESS	REGIONAL BUSINESS	OFFICE	INDUSTRIAL
SIC#	**SPECIFIC LAND USE**		**A**	**F**	**M**	**RA**	**UR**	**R1-8**	**R12-48**	**NB**	**CB**	**RB**	**O**	**I (15)**
*	Jail							S	S	S	S	S	S	S
*	Jail Farm/Camp		S	S		S	S							
*	Work Release Facility					S19	S19	S	S	S	S	S	S	
*	Public Agency Animal Control Facility			S		S	S					S		P
*	Public Agency Training Facility			S		S3					S3	S3	S3	C4
*	Hydroelectric Generation Facility			C14 S		C14 S	C14 S	C14 S						
*	Non-hydroelectric Generation Facility		P25 C12 S	C12 S	C12 S	C12 S	C12 S	C12 S	C12 S	C12 S	C12 S	C12 S	C12 S	P12 S
*	Communication Facility (17)		C6c S	P		C6c S	C6c S	C6c S	C6c S	C6c S	P	P	P	P
*	Earth Station		P6b C	P		C6a S	C6a S	C6a S	C6a S	P6b C	P	P	P	P
13	Oil and Gas Extraction		S	C	P	S	S	S	S	S	S	S	S	C
*	Energy Resource Recovery Facility			S	S	S	S	S	S	S	S	S	S	S

*	Soil Recycling Facility		S	S	S								C
*	Landfill		S	S	S	S	S	S	S	S	S	S	S
*	Transfer Station			S	S	S	S	S	S	S	S		P
*	Wastewater Treatment Facility				S	S	S	S	S	S	S	S	C
*	Municipal Water Production	S	P13 S	S	S	S	S	S	S	S	S	S	S
*	Airport/Heliport	S7	S7		S	S	S	S	S	S	S	S	S
*	Rural Public Infrastructure Maintenance Facility				C23								
*	Transit Bus Base						S	S	S	S	S	S	P
*	School Bus Base				C5 S20	C5 S	C5 S	C5 S	S	S	S	S	P
7948	Racetrack				S8	S8	S8	S8	S8	S8	S8	S8	S24
*	Regional Motor Sports Facility												P
*	County Fairgrounds Facility				P21 S22								
*	Fairground									S	S		S
8422	Zoo/Wildlife Exhibit(2)		S9		S9	S	S	S		S	S		
7941	Stadium/Arena										S		S
8221-8222	College/University(1)	P10	P10		P10 C11 S18	P10 C11 S18	P10 C11 S	P10 C11 S	P10 C11 S	P	P	P	P
*	Zoo Animal Breeding Facility	P16	P16		P16								
GENERAL CROSS REFERENCES:	Land Use Table Instructions, see K.C.C. 21A.08.020 and 21A.02.070; Development Standards, see K.C.C. chapters 21A.12 through 21A.30; General Provisions, see K.C.C. chapters 21A.32 through 21A.38; Application and Review Procedures, see K.C.C. chapters 21A.40 through 21A.44; (*)Definition of this specific land use, see K.C.C. chapter 21A.06.												

B. Development conditions.

1. Except technical institutions. See vocational schools on general services land use table, K.C.C. 21A.08.050.

2. Except arboretum. See K.C.C. 21A.08.040, recreation/cultural land use table.

3. Except weapons armories and outdoor shooting ranges.

4. Except outdoor shooting range.

5. Only in conjunction with an existing or proposed school.

6.a. Limited to no more than three satellite dish antennae.

b. Limited to one satellite dish antenna.

c. Limited to tower consolidations.

7. Limited to landing field for aircraft involved in forestry or agricultural practices or for emergency landing sites.

8. Except racing of motorized vehicles.

9. Limited to wildlife exhibit.

10. Only as a reuse of a public school facility subject to K.C.C. chapter 21A.32.

11. Only as a reuse of a surplus nonresidential facility subject to K.C.C. chapter 21A.32.

12. Limited to cogeneration facilities for on-site use only.

13. Excluding impoundment of water using a dam.

14. Limited to facilities that comply with the following:

a. Any new diversion structure shall not:

(1) exceed a height of eight feet as measured from the streambed; or

(2) impound more than three surface acres of water at the normal maximum surface level;

b. There shall be no active storage;

c. The maximum water surface area at any existing dam or diversion shall not be increased;

d. An exceedance flow of no greater than fifty percent in mainstream reach shall be maintained;

e. Any transmission line shall be limited to a:

(1) right-of-way of five miles or less; and

(2) capacity of two hundred thirty KV or less;

f. Any new, permanent access road shall be limited to five miles or less; and

g. The facility shall only be located above any portion of the stream used by anadromous fish.

15. For I-zoned sites located outside the urban growth area designated by the King County Comprehensive Plan, uses shown as a conditional or special use in K.C.C. 21A.08.100.A, except for waste water treatment facilities and racetracks, shall be prohibited. All other uses, including waste water treatment facilities, shall be subject to the provisions for rural industrial uses in K.C.C. chapter 21A.12.

16. The operator of such a facility shall provide verification to the department of natural resources and parks or its successor organization that the facility meets or exceeds the standards of the Animal and Plant Health Inspection Service of the United States Department of Agriculture and the accreditation guidelines of the American Zoo and Aquarium Association.

17. The following provisions of the table apply only to major communication facilities. Minor communication facilities shall be reviewed in accordance with the processes and standard outlined in K.C.C. chapter 21A.27.

18. Only for facilities related to resource-based research.

19. Limited to work release facilities associated with natural resource-based activities.

20. Limited to projects which do not require or result in an expansion of sewer service outside the urban growth area, unless a finding is made that no cost-effective alternative technologies are feasible, in which case a tightline sewer sized only to meet the needs of the school bus base and serving only the school bus base may be used. Renovation, expansion, modernization or reconstruction of a school bus base is permitted but shall not require or result in an expansion of sewer service outside the urban growth area, unless a finding is made that no cost-effective alternative technologies are feasible, in which case a tightline sewer sized only to meet the needs of the school bus base.

21. Only in conformance with the King County Site Development Plan Report, through modifications to the plan of up to ten percent are allowed for the following:

a. building square footage;

b. landscaping;

c. parking;

d. building height; or

e. impervious surface.

22. A special use permit shall be required for any modification or expansion of the King County fairgrounds facility that is not in conformance with the King County Site Development Plan Report or that exceeds the allowed modifications to the plan identified in subsection B.21 of this section.

23. The facility shall be primarily devoted to rural public infrastructure maintenance and is subject to the following conditions:

a. The minimum site area shall be ten acres, unless:

(1) the facility is a reuse of a public agency yard; or

(2) the site is separated from a county park by a street or utility right-of-way;

b. Type 1 landscaping as provided in K.C.C. chapter 21A.16 shall be provided between any stockpiling or grinding operations and adjacent residential zoned property;

c. Type 2 landscaping as provided in K.C.C. chapter 21A.16 shall be provided between any office and parking lots and adjacent residential zoned property;

d. Access to the site does not use local access streets that abut residential zoned property, unless the facility is a reuse of a public agency yard;

e. Structural setbacks from property lines shall be as follows:

(1) Buildings, structures and stockpiles used in the processing of materials shall be no closer than:

(a) one hundred feet from any residential zoned properties, except that the setback may be reduced to fifty feet when the grade where the building or structures are proposed is fifty feet or greater below the grade of the residential zoned property;

(b) fifty feet from any other zoned property, except when adjacent to a mineral extraction or materials processing site;

(c) the greater of fifty feet from the edge of any public street or the setback from residential zoned property on the far side of the street; and

(2) Offices, scale facilities, equipment storage buildings and stockpiles shall not be closer than fifty feet from any property line except when adjacent to M or F zoned property or when a reuse of an existing building. Facilities necessary to control access to the site, when demonstrated to have no practical alternative, may be located closer to the property line;

f. On-site clearing, grading or excavation, excluding that necessary for required access, roadway or storm drainage facility construction, shall not be permitted within fifty feet of any property line except along any portion of the perimeter adjacent to M or F zoned property. If native vegetation is restored, temporary disturbance resulting from construction of noise attenuation features located closer than fifty feet shall be permitted; and

g. Sand and gravel extraction shall be limited to forty thousand yards per year.

24. The following accessory uses to a motor race track operation are allowed if approved as part of the special use permit:

a. motocross;
b. autocross;
c. skidpad;
d. garage;
e. driving school; and
f. fire station.

25. Only as an accessory use of an agricultural anaerobic digester. (Ord. 17287 § 10, 2012: Ord. 17191 § 35, 2011: Ord. 16267 § 24, 2008: 15938 § 2, 2007: Ord. 14808 § 3, 2003: Ord. 14199 § 233, 2001: Ord. 14045 § 17, 2001: Ord. 13129 § 13, 1998: Ord. 13022 § 15, 1998: Ord. 12709 § 2, 1997: Ord. 12596 § 10, 1997: Ord. 11621 § 40, 1994: Ord. 10870 § 337, 1993).

21A.08.110 Shoreline jurisdiction - permitted uses - exceptions. The permitted land uses allowed in this chapter are allowed within the shoreline jurisdiction except as amended by K.C.C. 21A.25.100. (Ord. 16985 § 109, 2010).

21A.08.900 Applicability - Ordinance 13694. Complete applications for segregation submitted prior to January 1, 2000, shall continue to be governed by those ordinances in effect on the date the complete application was submitted. (Ord. 13694 § 93, 1999).

21A.12 DEVELOPMENT STANDARDS - DENSITY AND DIMENSIONS

Sections:

21A.12.010 Purpose.
21A.12.020 Interpretation of tables.
21A.12.030 Densities and dimensions - residential and rural zones.
21A.12.040 Densities and dimensions - resource and commercial/industrial zones.
21A.12.042 Historic buildings – exceptions for number of dwelling units allowed.
21A.12.050 Measurement methods.
21A.12.060 Minimum urban residential density.
21A.12.070 Calculations - allowable dwelling units lots or floor area.
21A.12.080 Calculations - site area used for base density and maximum density floor area calculations.
21A.12.085 Calculations - site area used for minimum density calculations.
21A.12.087 Minimum density adjustments for moderate slopes.
21A.12.090 Lot area - prohibited reduction.
21A.12.100 Lot area - minimum lot area for construction.
21A.12.110 Measurement of setbacks.
21A.12.120 Setbacks - specific building or use.
21A.12.122 Setbacks - livestock buildings and manure storage areas.
21A.12.130 Setbacks - modifications.
21A.12.140 Setbacks - from regional utility corridors.
21A.12.150 Setbacks - from alley.
21A.12.160 Setbacks - required modifications.
21A.12.170 Setbacks - projections and structures allowed.
21A.12.180 Height - exceptions to limits.
21A.12.190 Height - limits near major airports.
21A.12.200 Lot or site divided by zone boundary.
21A.12.210 Sight distance requirements.
21A.12.220 Nonresidential land uses in residential zones.
21A.12.230 Personal services and retail uses in R-4 through R-48 zones.
21A.12.240 Joint use driveway and easement width.
21A.12.250 General personal service use, office/outpatient use allowed restrictions.
21A.12.260 Shoreline jurisdiction - density and dimensions apply - exceptions.

21A.12.010 Purpose. The purpose of this chapter is to establish basic dimensional standards for development relative to residential density and as well as specific rules for general application. The standards and rules are established to provide flexibility in project design, and maintain privacy between adjacent uses. (Ord. 10870 § 338, 1993).

21A.12.020 Interpretation of tables.

A. K.C.C. 21A.12.030 and 21A.12.040 contain general density and dimension standards for the various zones and limitations specific to a particular zone(s). Additional rules, exceptions, and methodologies are set forth in K.C.C. 21A.12.050 through 21A.12.210.

B. The density and dimension tables are arranged in a matrix format on two separate tables and are delineated into two general land use categories:

1. Residential; and
2. Resource and Commercial/Industrial.

C. Development standards are listed down the left side of both tables, and the zones are listed at the top. The matrix cells contain the minimum dimensional requirements of the zone. The parenthetical numbers in the matrix identify specific requirements applicable either to a specific use or zone. A blank box indicates that there are no specific requirements. If more than one standard appears in a cell, each standard will be subject to any applicable parenthetical footnote following the standard. (Ord. 10870 § 339, 1993).

21A.12.030 Densities and dimensions - residential and rural zones.

A. Densities and dimensions - residential and rural zones.

	RURAL				RESIDENTIAL								
	ZONES	RURAL AREA			URBAN RE-SERVE	RESIDENTIAL							
STANDARDS	RA-2.5	RA-5	RA-10	RA-20	UR	R-1 (17)	R-4	R-6	R-8	R-12	R-18	R-24	R-48
Base Density: Dwelling Unit/Acre (15) (28)	0.2 du/ac	0.2 du/ac	0.1 du/ac	0.05 du/ac	0.2 du/ac (21)	1 du/ac	4 du/ac (6)	6 du/ac	8 du/ac	12 du/ac	18 du/ac	24 du/ac	48 du/ac
Maximum Density: Dwelling Unit/Acre (1)	0.4 du/ac (20)						6 du/ac (22) 8 du/ac (27)	9 du/ac 12 du/ac (27)	12 du/ac 16 du/ac (27)	18 du/ac 24 du/ac (27)	27 du/ac 36 du/ac (27)	36 du/ac 48 du/ac (27)	72 du/ac 96 du/ac (27)
Minimum Density: (2)							85% (12) (18) (23)	85 % (12) (18)	85 % (12) (18)	80 % (18)	75 % (18)	70 % (18)	65 % (18)
Minimum Lot Area (13)	1.875 ac	3.75 ac	7.5 ac	15 ac									
Minimum Lot Width (3)	135 ft	135 ft	135 ft	135 ft	35 ft (7)	35 ft (7)	30 ft	30 ft	30 ft	30 ft	30ft	30 ft	30 ft
Minimum Street Setback (3)	30 ft (9)	30 ft (9)	30ft (9)	30 ft (9)	30 ft (7)	20 ft (7)	10 ft (8)	10 ft (8)	10 ft (8)	10 ft (8)	10 ft (8)	10ft (8)	10 ft (8)
Minimum Interior Setback (3) (16)	5 ft (9)	10ft (9)	10 ft (9)	10 ft (9)	5 ft (7)	5 ft (7)	5 ft	5 ft	5 ft	5 ft (10)	5 ft (10)	5 ft (10)	5 ft (10)
Base Height (4)	40 ft	40 ft	40 ft	40 ft	35 ft	35 ft	35 ft (25)	35 ft 45 ft (14) (25)	35 ft 45 ft (14) (25)	60 ft	60 ft 80 ft (14)	60 ft 80 ft (14)	60 ft 80 ft (14)
Maximum Impervious Surface: Percentage (5)	25 % (11) (19) (26)	20 % (11) (19) (26)	15% (11) (19) (24) (26)	12.5% (11) (19) (26)	30% (11) (26)	30% (11) (26)	55% (26)	70% (26)	75% (26)	85% (26)	85% (26)	85% (26)	90% (26)

B. Development conditions.

1. This maximum density may be achieved only through the application of residential density incentives in accordance with K.C.C. chapter 21A.34 or transfers of development rights in accordance with K.C.C. chapter 21A.37, or any combination of density incentive or density transfer.

2. Also see K.C.C. 21A.12.060.

3. These standards may be modified under the provisions for zero-lot-line and townhouse developments.

4. Height limits may be increased if portions of the structure that exceed the base height limit provide one additional foot of street and interior setback for each foot above the base height limit, but the maximum height may not exceed seventy-five feet. Netting or fencing and support structures for the netting or fencing used to contain golf balls in the operation of golf courses or golf driving ranges are exempt from the additional interior setback requirements but the maximum height shall not exceed seventy-five feet, except for recreation or multiuse parks, where the maximum height shall not exceed one hundred twenty-five feet, unless a golf ball trajectory study requires a higher fence.

5. Applies to each individual lot. Impervious surface area standards for:

a. Regional uses shall be established at the time of permit review;

b. Nonresidential uses in rural area and residential zones shall comply with K.C.C. 21A.12.120 and 21A.12.220;

c. Individual lots in the R-4 through R-6 zones that are less than nine thousand seventy-six square feet in area shall be subject to the applicable provisions of the nearest comparable R-6 or R-8 zone; and

d. A lot may be increased beyond the total amount permitted in this chapter subject to approval of a conditional use permit.

6. Mobile home parks shall be allowed a base density of six dwelling units per acre.

7. The standards of the R-4 zone apply if a lot is less than fifteen thousand square feet in area.

8. At least twenty linear feet of driveway shall be provided between any garage, carport or other fenced parking area and the street property line. The linear distance shall be measured along the center line of the driveway from the access point to such garage, carport or fenced area to the street property line.

9.a. Residences shall have a setback of at least one hundred feet from any property line adjoining A, M or F zones or existing extractive operations. However, residences on lots less than one hundred fifty feet in width adjoining A, M or F zones or existing extractive operations shall have a setback from the rear property line equal to fifty percent of the lot width and a setback from the side property equal to twenty-five percent of the lot width.

b. Except for residences along a property line adjoining A, M or F zones or existing extractive operations, lots between one acre and two and one-half acres in size shall conform to the requirements of the R-1 zone and lots under one acre shall conform to the requirements of the R-4 zone.

10.a. For developments consisting of three or more single-detached dwellings located on a single parcel, the setback shall be ten feet along any property line abutting R-1 through R-8, RA and UR zones, except for structures in on-site play areas required in K.C.C. 21A.14.190, which shall have a setback of five feet.

b. For townhouse and apartment development, the setback shall be twenty feet along any property line abutting R-1 through R-8, RA and UR zones, except for structures in on-site play areas required in K.C.C. 21A.14.190, which shall have a setback of five feet, unless the townhouse or apartment development is adjacent to property upon which an existing townhouse or apartment development is located.

11. Lots smaller than one-half acre in area shall comply with standards of the nearest comparable R-4 through R-8 zone. For lots that are one-half acre in area or larger, the maximum impervious surface area allowed shall be at least ten thousand square feet. On any lot over one acre in area, an additional five percent of the lot area may be used for buildings related to agricultural or forestry practices. For lots smaller

than two acres but larger than one-half acre, an additional ten percent of the lot area may be used for structures that are determined to be medically necessary, if the applicant submits with the permit application a notarized affidavit, conforming with K.C.C. 21A.32.170A.2.

12. For purposes of calculating minimum density, the applicant may request that the minimum density factor be modified based upon the weighted average slope of the net buildable area of the site in accordance with K.C.C. 21A.12.087.

13. The minimum lot area does not apply to lot clustering proposals as provided in K.C.C. chapter 21A.14.

14. The base height to be used only for projects as follows:

a. in R-6 and R-8 zones, a building with a footprint built on slopes exceeding a fifteen percent finished grade; and

b. in R-18, R-24 and R-48 zones using residential density incentives and transfer of density credits in accordance with this title.

15. Density applies only to dwelling units and not to sleeping units.

16. Vehicle access points from garages, carports or fenced parking areas shall be set back from the property line on which a joint use driveway is located to provide a straight line length of at least twenty-six feet as measured from the center line of the garage, carport or fenced parking area, from the access point to the opposite side of the joint use driveway.

17.a. All subdivisions and short subdivisions in the R-1 zone shall be required to be clustered if the property is located within or contains:

(1) a floodplain;
(2) a critical aquifer recharge area;
(3) a regionally or locally significant resource area;
(4) existing or planned public parks or trails, or connections to such facilities;
(5) a category type S or F aquatic area or category I or II wetland;
(6) a steep slope; or
(7) an urban separator or wildlife habitat network designated by the Comprehensive Plan or a community plan.

b. The development shall be clustered away from critical areas or the axis of designated corridors such as urban separators or the wildlife habitat network to the extent possible and the open space shall be placed in a separate tract that includes at least fifty percent of the site. Open space tracts shall be permanent and shall be dedicated to a homeowner's association or other suitable organization, as determined by the director, and meet the requirements in K.C.C. 21A.14.040. On-site critical area and buffers and designated urban separators shall be placed within the open space tract to the extent possible. Passive recreation, with no development of recreational facilities, and natural-surface pedestrian and equestrian trails are acceptable uses within the open space tract.

18. See K.C.C. 21A.12.085.

19. All subdivisions and short subdivisions in R-1 and RA zones within the North Fork and Upper Issaquah Creek subbasins of the Issaquah Creek Basin (the North Fork and Upper Issaquah Creek subbasins are identified in the Issaquah Creek Basin and Nonpoint Action Plan) and the portion of the Grand Ridge subarea of the East Sammamish Community Planning Area that drains to Patterson Creek shall have a maximum impervious surface area of eight percent of the gross acreage of the plat. Distribution of the allowable impervious area among the platted lots shall be recorded on the face of the plat. Impervious surface of roads need not be counted towards the allowable impervious area. Where both lot- and plat-specific impervious limits apply, the more restrictive shall be required.

20. This density may only be achieved on RA 2.5 zoned parcels receiving density from rural forest focus areas through a transfer of density credit pursuant to K.C.C. chapter 21A.37.

21. Base density may be exceeded, if the property is located in a designated rural city urban growth area and each proposed lot contains an occupied legal residence that predates 1959.

22. The maximum density is four dwelling units per acre for properties zoned R-4 when located in the Rural Town of Fall City.

23. The minimum density requirement does not apply to properties located within the Rural Town of Fall City.

24. The impervious surface standards for the county fairground facility are established in the King County Fairgrounds Site Development Plan, Attachment A to Ordinance 14808* on file at the department of natural resources and parks and the department of permitting and environmental review. Modifications to that standard may be allowed provided the square footage does not exceed the approved impervious surface square footage established in the King County Fairgrounds Site Development Plan Environmental Checklist, dated September 21, 1999, Attachment B to Ordinance 14808*, by more than ten percent.

25. For cottage housing developments only:

a. The base height is eighteen feet.

b. Buildings have pitched roofs with a minimum slope of six and twelve may extend up to twenty-five feet at the ridge of the roof.

26. Impervious surface does not include access easements serving neighboring property and driveways to the extent that they extend beyond the street setback due to location within an access panhandle or due to the application of King County Code requirements to locate features over which the applicant does not have control.

27. Only in accordance with K.C.C. 21A.34.040.F.1.g. and F.6.

28. On a site zoned RA with a building listed on the national register of historic places, additional dwelling units in excess of the maximum density may be allowed under K.C.C. 21A.12.042. (Ord. 17841 § 31, 2014: Ord. 17539 § 33, 2013: Ord. 17420 § 99, 2012: Ord. 16267 § 25, 2008: Ord. 15245 § 6, 2005: Ord. 15051 § 126, 2004: Ord. 15032 § 17, 2004: Ord. 14808 § 4, 2003: Ord. 14807 § 7, 2003: Ord. 14429 § 2, 2002: Ord. 14190 § 33, 2001: Ord. 14045 § 18, 2001: Ord. 13881 § 1, 2000: Ord. 13571 § 1, 1999: Ord. 13527 § 1, 1999: Ord. 13274 § 10, 1998: Ord. 13086 § 1, 1998: Ord. 13022 § 16, 1998: Ord. 12822 § 6, 1997: Ord. 12549 § 1, 1996: Ord. 12523 § 3, 1996: Ord. 12320 § 2, 1996: Ord. 11978 § 4, 1995: Ord. 11886 § 5, 1995: Ord. 11821 § 2, 1995: Ord. 11802 § 3, 1995: Ord. 11798 § 1, 1995: Ord. 11621 § 41, 1994: Ord. 11555 § 5, 1994: Ord. 11157 § 15, 1993: Ord. 10870 § 340, 1993).

***Available in the King County Archives.**

21A.12.040 Densities and dimensions - resource and commercial/industrial zones.

A. Densities and dimensions - resource and commercial/industrial zones.

		RESOURCE			COMMERCIAL/INDUSTRIAL				
	ZONES	AGRICULTURE	FOREST	MINERAL	NEIGHBOR-HOOD BUSINESS	COMMUNITY BUSINESS	REGIONAL BUSINESS	OFFICE	INDUSTRIA

									L
STANDARDS	**A-10**	**A-35**	**F**	**M**	**NB**	**CB**	**RB**	**O**	**I**
Base Density: Dwelling Unit/Acre (19)	0.1 du/ac	.0286 du/ac	.0125 du/ac		8 du/ac (2)	48 du/ac (2)	36 du/ac (2) 48 du/ac (1)	48 du/ac (2)	
Maximum Density: Dwelling Unit/Acre					12 du/ac (3) 16 du/ac (15)	72 du/ac (16) 96 du/ac (17)	48 du/ac (3) 72 du/ac (16) 96 du/ac (17)	72 du/ac (16) 96 du/ac (17)	
Minimum Lot Area	10 acres	35 acres	80 acres	10 acres					
Maximum Lot Depth/ Width Ratio	4 to 1	4 to 1							
Minimum Street Setback	30 ft (4)	30 ft (4)	50 ft (4)	(12)	10 ft (5)	10 ft (5)	10 ft (5)	10 ft	25 ft
Minimum Interior Setback	10 ft (4)	10 ft (4)	100 ft (4)	(12)	10 ft (18) 20 ft (14)	20 ft (7)	20 ft (7)	20 ft (7)	20 ft (7) 50 ft (8)
Base Height (10)	35 ft	35 ft	35 ft	35 ft	35 ft 45 ft (6)	35 ft 60 ft (6) 65 ft (17)	35 ft 65 ft (6)	45 ft 65 ft (6)	45 ft
Maximum Floor/Lot Ratio: Square Feet					1/1 (9)	1.5/1 (9)	2.5/1 (9)	2.5/1 (9)	2.5/1
Maximum Impervious Surface: Percentage (13)	15% 35% (11)	10% 35% (11)	10% 35% (11)		85%	85%	90%	75%	90%

B. Development conditions.

1. In the RB zone on property located within the Potential Annexation Area of a rural city, this density is not allowed.

2. These densities are allowed only through the application of mixed-use development standards and, in the NB zone on property in the urban area designated commercial outside of center, for stand-alone townhouse development.

3. These densities may only be achieved through the application of residential density incentives or transfer of development rights in mixed-use developments and, in the NB zone on property in the urban area designated commercial outside of center, for stand-alone townhouse development. See K.C.C. chapters 21A.34 and 21A.37.

4.a. in the F zone, scaling stations may be located thirty-five feet from property lines. Residences shall have a setback of at least thirty feet from all property lines.

b. for lots between one acre and two and one half acres in size, the setback requirements of the R-1 zone shall apply. For lots under one acre, the setback requirements of the R-4 zone shall apply.

c. for developments consisting of three or more single-detached dwellings located on a single parcel, the setback shall be ten feet along any property line abutting R-1 through R-8, RA and UR zones.

5. Gas station pump islands shall be placed no closer than twenty-five feet to street front lines.

6. This base height allowed only for mixed-use developments and for stand-alone townhouse development in the NB zone on property designated commercial outside of center in the urban area.

7. Required on property lines adjoining rural area and residential zones.

8. Required on property lines adjoining rural area and residential zones for industrial uses established by conditional use permits.

9. The floor-to-lot ratio for mixed use developments shall conform to K.C.C. chapter 21A.14.

10. Height limits may be increased if portions of the structure building that exceed the base height limit provide one additional foot of street and interior setback for each foot above the base height limit, provided the maximum height may exceed seventy-five feet only in mixed use developments. Netting or fencing and support structures for the netting or fencing used to contain golf balls in the operation of golf courses or golf driving ranges are exempt from the additional interior setback requirement provided that the maximum height shall not exceed seventy-five feet.

11. Applicable only to lots containing less than one acre of lot area. Development on lots containing less than fifteen thousand square feet of lot area shall be governed by impervious surface standards of the nearest comparable R-4 through R-8 zone.

12. See K.C.C. 21A.22.060 for setback requirements in the mineral zone.

13. The impervious surface area for any lot may be increased beyond the total amount permitted in this chapter subject to approval of a conditional use permit.

14. Required on property lines adjoining rural area and residential zones unless a stand-alone townhouse development on property designated commercial outside of center in the urban area is proposed to be located adjacent to property upon which an existing townhouse development is located.

15. Only as provided for walkable communities under K.C.C. 21A.34.040.F.8. well-served by transit or for mixed-use development through the application of rural area and residential density incentives under K.C.C. 21A.34.040.F.1.g.

16. Only for mixed-use development through the application of residential density incentives under K.C.C. chapter 21A.34 or the transfer of development rights under K.C.C. chapter 21A.37. In the RB zone on property located within the Potential Annexation Area of a rural city, this density is not allowed.

17. Only for mixed-use development through the application of residential density incentives through the application of residential density incentives under K.C.C. chapter 21A.34 or the transfer of development rights under K.C.C. chapter 21A.37. Upper-level setbacks are required for any facade facing a pedestrian street for any portion of the structure greater than forty-five feet in height. The upper level setback shall be at least one foot for every two feet of height above forty-five feet, up to a maximum required setback of fifteen feet. The first four feet of horizontal projection of decks, balconies with open railings, eaves, cornices, and gutters shall be permitted in required setbacks. In the RB zone on property located within the Potential Annexation Area of a rural city, this density is not allowed.

18. Required on property lines adjoining rural area and residential zones only for a social service agency office reusing a residential structure in existence on January 1, 2010.

19. On a site zoned A with a building designated as a county landmark in accordance with the procedures in K.C.C. 20.62.070, additional dwelling units in excess of the maximum density may be allowed under K.C.C. 21A.12.042. (Ord. 17539 § 34, 2013: Ord. 16950 § 20, 2010: Ord. 16267 § 26, 2008: Ord. 14190 § 34, 2001: Ord. 14045 § 19, 2001: Ord. 13086 § 2, 1998: Ord. 13022 § 17, 1998: Ord. 12929 § 2, 1997: Ord. 12522 § 4, 1996: Ord. 11821 § 3, 1995: Ord. 11802 § 4, 1995: Ord. 11621 § 42, 1994: Ord. 10870 § 341, 1993).

21A.12.042 Historic buildings – exceptions for number of dwelling units allowed. On a site zoned A or RA with a building designated as a county landmark in

accordance with the procedures in K.C.C. 20.62.070, the number of dwelling units allowed may exceed what would otherwise be allowed under K.C.C. 21A.12.030 as follows:

A. All dwelling units shall be located within the historic building; and

B. No more than five dwelling units shall be allowed, subject to approval by the historic preservation officer and, where required, review and approval by the landmarks commission in accordance with the procedures in K.C.C. 20.62.080. (Ord. 17539 § 35, 2013).

21A.12.050 Measurement methods. The following provisions shall be used to determine compliance with this title:

A. Street setbacks shall be measured from the existing edge of a street right-of-way or temporary turnaround, except as provided by K.C.C. 21A.12.150;

B. Lot widths shall be measured by scaling a circle of the applicable diameter within the boundaries of the lot, provided that an access easement shall not be included within the circle;

C. Building height shall be measured from the average finished grade to the highest point of the roof. The average finished grade shall be determined by first delineating the smallest square or rectangle which can enclose the building and then averaging the elevations taken at the midpoint of each side of the square or rectangle, provided that the measured elevations do not include berms;

D. Lot area shall be the total horizontal land area contained within the boundaries of a lot; and

E. Impervious surface calculations shall not include areas of turf, landscaping, natural vegetation or flow control or water quality treatment facilities. (Ord. 15051 § 127, 2004: Ord. 13190 § 16, 1998: Ord. 10870 § 342, 1993).

21A.12.060 Minimum urban residential density. Minimum density for residential development in the urban areas designated by the Comprehensive Plan shall be based on the tables in K.C.C. 21A.12.030, adjusted as provided in 21A.12.070 through 21A.12.080.

A. A proposal may be phased, if compliance with the minimum density requirement results in noncompliance with of K.C.C. chapter 21A.28, if the overall density of the proposal is consistent with this section.

B. Minimum density requirements may be waived by King County if the applicant demonstrates one or more of the following:

1. The proposed layout of the lots in a subdivision or the buildings in a multiple dwelling development will not preclude future residential development consistent with the minimum density of the zone;

2. The non-sensitive area of the parcel is of a size or configuration that results in lots that cannot meet the minimum dimensional requirements of the zone;

3. In the R-12 through R-48 zones, the area of the parcel required to accommodate storm water facilities exceeds ten percent of the area of the site;

4. The site contains a national, state or county historic landmark.

C. A proposal to locate a single residential unit on a lot shall be exempt from the minimum density requirement provided the applicant either preplans the site by demonstrating that the proposed single residence would be located in a manner compatible with future division of the site in a manner that would meet the minimum density requirements, or locates the dwelling within fifteen feet of one or more of the site's interior lot lines.

D. Alternative minimum density requirements may be imposed through county-approved property-specific development standards (P-suffix), a special district overlays

in accordance with K.C.C. chapter 21A.38 or a subarea plan. (Ord. 14045 § 20, 2001: Ord. 11555 § 6, 1994: 10870 § 343, 1993).

21A.12.070 Calculations - allowable dwelling units, lots or floor area. Permitted number of units, or lots or floor area shall be determined as follows:

A. The allowed number of dwelling units or lots (base density) shall be computed by multiplying the site area specified in K.C.C. 21A.12.080 by the applicable residential base density number;

B. The maximum density (unit or lot) limits shall be computed by adding the bonus or transfer units authorized by K.C.C. chapters 21A.34 and 21A.37 to the base units computed under subsection A of this section;

C. The allowed floor area, which excludes structured or underground parking areas and areas housing mechanical equipment, shall be computed by applying the floor-to-lot area ratio to the project site area specified in K.C.C. 21A.12.080;

D. If calculations result in a fraction, the fraction shall be rounded to the nearest whole number as follows, except as provided in subsection E of this section:

1. Fractions of 0.50 or above shall be rounded up; and
2. Fractions below 0.50 shall be rounded down; and

E. For subdivisions and short subdivisions in the RA and A zones, rounding up of the number of development units or lots is not allowed. (Ord. 14190 § 35, 2001: Ord. 14045 § 21, 2001: Ord. 11927 § 1, 1995: Ord. 10870 § 344, 1993).

21A.12.080 Calculations - site area used for base density and maximum density floor area calculations.

A. All site areas may be used in the calculation of base and maximum allowed residential density or project floor area.

B. For subdivisions and short subdivisions in the RA zone, if calculations of site area for base density result in a fraction, the fraction shall be rounded to the nearest whole number as follows:

1. Fractions of 0.50 or above shall be rounded up; and
2. Fractions below 0.50 shall be rounded down. (Ord. 15051 § 128, 2004: Ord. 14045 § 22, 2001: Ord. 11621 § 43, 1994: Ord. 11555 § 3, 1994: Ord. 10870 § 345, 1993).

21A.12.085 Calculations - site area used for minimum density calculations. Minimum density shall be determined by:

A. Multiplying the Base Density (Dwelling Units/Acre) as set forth in K.C.C. 21A.12.030.A by the net buildable area of the project site; and then

B. Multiplying the resulting product by the Minimum Density percentage set forth in K.C.C. 21A.12.030.A or as adjusted pursuant to the provisions of K.C.C. 21A.12.087. (Ord. 12549 § 2, 1996: Ord. 11798 § 2, 1995: Ord. 11555 § 4, 1994).

21A.12.087 Minimum density adjustments for moderate slopes.

A. For purposes of calculating minimum density of sloped sites in zones R-4, R-6 and R-8, the following adjustment is permitted:

Weighted Average Slope of Net Buildable Area(s) of Site:	Minimum Density Factor:
0% - less than 5%	85%
5% - less than 15%	83%, less 1.5% for each 1% of average slope in excess of 5%
15% - less than 40%	66%, less 2.0% for each 1% of average

	slope in excess of 15%

B. Weighted average slope shall be calculated as follows:

1. The applicant shall submit a topographic survey of the net buildable area(s) of the site which identifies distinct areas within the following slope increments: 0-5%, 5-10%, 10-15%, etc. up to 35-40%.

2. Each slope increment will have a corresponding median slope value. This value is the midpoint of each slope increment. For instance, slope increments of 0-5% and 5-10% shall have median values of 2.5% and 7.5%, respectively.

3. The weighted average slope shall be determined by multiplying the number of square feet in each area by the median slope value in that area. For example, if the net buildable area portion of a site is 30,000 sq. ft. of which there are 10,000 square feet of 5-10% slope and 20,000 square feet of 10-15% slope, the weighted average slope would be 10.8%. See the following calculation [(10,000 sq. ft. times 7.5% plus 20,000 sq. ft. times 12.5%) divided by 30,000 sq. ft. = 10.8%]. (Ord. 12549 § 3, 1996).

21A.12.090 Lot area - prohibited reduction. Any portion of a lot that was used to calculate compliance with the standards and regulations of this title shall not be subsequently subdivided or segregated from such lot. (Ord. 10870 § 346, 1993).

21A.12.100 Lot area - minimum lot area for construction. Except as provided for nonconformances in K.C.C. 21A.32:

A. In the UR and R zones no construction shall be permitted on a lot that contains an area of less than 2,500 square feet or that does not comply with the applicable minimum lot width, except for townhouse developments zero-lot-line subdivisions, or lots created prior to February 2, 1995 in a recorded subdivision or short subdivision which complied with applicable subdivision or short subdivision laws;

B. In the A, F or RA zones:

1. Construction shall not be permitted on a lot containing less than 5,000 square feet; and

2. Construction shall be limited to one dwelling unit and residential accessory uses for lots containing greater than 5,000 square feet, but less than 12,500 square feet. (Ord. 12268 § 1, 1996: Ord. 10870 § 347, 1993).

21A.12.110 Measurement of setbacks.

A. Interior setback: the interior setback is measured from the interior lot line to a line parallel to and measured perpendicularly from the interior lot lines at the depth prescribed for each zone.

B. Street setback: the street setback is measured from the street right-of-way or the edge of a surface improvement which extends beyond a right-of-way, whichever is closer to the proposed structure, to a line parallel to and measured perpendicularly from the street right-of-way or the edge of the surface improvement at the depth prescribed for each zone. (Ord. 10870 § 348, 1993).

21A.12.120 Setbacks - specific building or use. When a building or use is required to maintain a specific setback from a property line or other building, such setback shall apply only to the specified building or use. (Ord. 10870 § 349, 1993).

21A.12.122 Setbacks - livestock buildings and manure storage areas.

A. The minimum interior setback for any building used to house, confine or feed swine shall be 90 feet.

B. The minimum interior setback for any building used to house, confine or feed any other livestock shall be 25 feet.

C. The minimum interior setback for any manure storage area shall be 35 feet. (Ord. 12786 § 3, 1977).

21A.12.130 Setbacks - modifications. When a lot is located between lots having nonconforming street setbacks, the required street setback for such lot may be the average of the two nonconforming setbacks or sixty percent of the required street setback, whichever results in the greater street setback. (Ord. 16950 § 21, 2010: Ord. 10870 § 350, 1993).

21A.12.140 Setbacks - from regional utility corridors.

A. Except as otherwise provided in subsection B. of this section, in subdivisions and short subdivisions, areas used as regional utility corridors shall be contained in separate tracts.

B. For a subdivision or short subdivision:

1. Upon mutual agreement of the utility and applicant for the subdivision or short subdivision submitted at the time of application for the preliminary plat, the area of the regional utility corridor placed in a separate tract may be less than the entire utility right-of-way or easement. The agreement may be evidenced by correspondence between the utility and the applicant;

2. If the utility and applicant enter into an agreement under subsection B.1. of this section:

a. The location of the easement or right-of-way shall be shown on the face of the plat;

b. The applicant shall record on the title of all lots that extend into the right-of-way or easement a notice approved by the department that there is an easement or right-of-way for a regional utility corridor that may subject use of that area of the property to conditions established by the utility; and

c. The department shall include as conditions of plat approval the conditions on use of the area within the regional utility corridor included in the agreement between the utility and the applicant.

C. In land development permits other than subdivisions or short subdivisions, easements shall be used to delineate regional utility corridors.

D. All structures shall maintain a minimum distance of five feet from property or easement lines delineating the boundary of regional utility corridors, except for utility structures necessary to the operation of the utility corridor or when structures are allowed by mutual agreement in the regional utility corridor.

E. Any structure designed for human occupancy, except for utility structures not normally occupied that are necessary for the operation of the pipeline or a minor communication facility, and any required parking or recreation space shall maintain a minimum distance of one hundred feet from a hazardous liquid or gas transmission pipeline located within a regional utility corridor. The setback distance may be modified if the applicant demonstrates the following:

1. A one-hundred-foot setback would deny all reasonable use of the property; or

2. That the structure, parking or recreation space would be protected from radiant heat of an explosion by berming or other physical barriers; or

3. That a one-hundred-foot setback would be impractical or unnecessary due to existing geographical features, streets, lot lines, or easements; or

4. That no other practical alternative exists to meet the demand for service; and

5. That the applicant will construct a hazardous liquid or gas transmission containment system or other mitigating actions if the county finds that leakage could accumulate within one hundred feet of the pipeline. Any containment system or other mitigating actions required by this section shall meet all applicable federal, state and local regulations. (Ord. 17191 § 36, 2011: Ord. 15245 § 7, 2005: Ord. 14045 § 23, 2001: Ord. 13190 § 17, 1998: Ord. 10870 § 351, 1993).

21A.12.150 Setbacks - from alley.

A. Structures may be built to a property line abutting an alley, except as provided in subsection B.

B. Vehicle access points from garages, carports or fenced parking areas shall be set back from the alley property line to provide a straight line length of at least 26 feet, as measured from the centerline of the garage, carport or fenced parking area, from the access point to the opposite edge of the alley. No portion of the garage or the door in motion may cross the property line. (Ord. 11978 § 5, 1995: Ord. 10870 § 352, 1993).

21A.12.160 Setbacks - required modifications. The following setback modifications are required:

A. In addition to providing the standard street setback, a lot adjoining a half-street or designated arterial shall provide an additional width of street setback sufficient to accommodate construction of the planned half-street or arterial; and

B. Where the standard setback for a property is modified within an adopted subarea or neighborhood plan area zoning, the applicable setback shall be that specified therein. (Ord. 12822 § 7, 1997: Ord. 10870 § 353, 1993).

21A.12.170 Setbacks - projections and structures allowed. Provided that the required setbacks from regional utility corridors of K.C.C. 21A.12.140, the adjoining half-street or designated arterial setbacks of K.C.C. 21A.12.160 and the sight distance requirements of K.C.C. 21A.12.210 are maintained, structures may extend into or be located in required setbacks, including setbacks as required by K.C.C. 21A.12.220.B, as follows:

A. Fireplace structures, bay or garden windows, enclosed stair landings, closets, or similar structures may project into any setback, provided such projections are:

1. Limited to two per facade;
2. Not wider than ten feet; and
3. Not more than twenty-four inches into an interior setback or thirty inches into a street setback;

B. Uncovered porches and decks that exceed eighteen inches above the finished grade may project:

1. Eighteen inches into interior setbacks; and
2. Five feet into the street setback;

C. Uncovered porches and decks not exceeding eighteen inches above the finished grade may project to the property line;

D. Eaves may not project more than:

1. Eighteen inches into an interior setback;
2. Twenty-four inches into a street setback; or
3. Eighteen inches across a lot line in a zero-lot-line development;

E. Fences with a height of six feet or less may project into or be located in any setback;

F. Rockeries, retaining walls and curbs may project into or be located in any setback. Except for structures that cross the setback perpendicularly to property lines or that abut a critical area, these structures:

1. Shall not exceed a height of six feet in the R-1 through R-18, UR, RA and resource zones;

2. Shall not exceed a height of eight feet in the R-24 and R-48 zones; and

3. Shall not exceed the building height for the zone in commercial/industrial zones, measured in accordance with the standards established in the King County Building Code, Title 16;

G. Fences located on top of rockeries, retaining walls or berms are subject to the requirements of K.C.C. 21A.14.220;

H. Telephone, power, light and flag poles;

I. The following may project into or be located within a setback, but may only project into or be located within a five foot interior setback area if an agreement documenting consent between the owners of record of the abutting properties is recorded with the records and licensing services division prior to the installment or construction of the structure:

1. Sprinkler systems, electrical and cellular equipment cabinets and other similar utility boxes and vaults;

2. Security system access controls;

3. Structures, except for buildings, associated with trails and on-site recreation spaces and play areas required in K.C.C.21A.14.180 and K.C.C. 21A.14.190 such as benches, picnic tables and drinking fountains; and

4. Surface water management facilities as required by K.C.C. 9.04;

J. Freestanding air conditioners and heat pumps may project into or be located within a setback abutting a residential property, but may only be located closer than five feet of an abutting residential property if an agreement documenting consent between the owners of record of the abutting properties is recorded with the records and licensing services division prior to permit issuance.

K. Mailboxes and newspaper boxes may project into or be located within street setbacks;

L. Fire hydrants and associated appendages;

M. Metro bus shelters may be located within street setbacks;

N. Unless otherwise allowed in K.C.C. 21A.20.080, free standing and monument signs four feet or less in height, with a maximum sign area of twenty square feet may project into or be located within street setbacks;

O. On a parcel in the RA zone, in the interior setback that adjoins a property zoned NB or CB, structures housing refrigeration equipment that extends no more than ten feet into the setback and is no more than sixty feet in length; and

P. Stormwater conveyance and control facilities, both above and below ground, provided such projections are:

1. Consistent with setback, easement and access requirements specified in the Surface Water Design Manual; or

2. In the absence of said specifications, not within five feet of the property line.

RETAINING WALL IN SETBACK

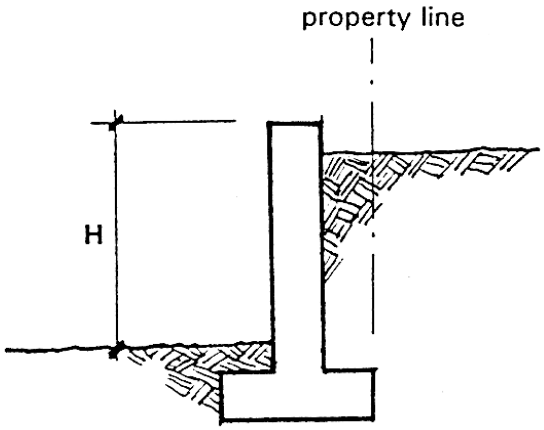

H max. 6′ in R1 - R18, UR, RA & Resource Zones

H max. 8′ in R24 and R 48 Zones, and not to exceed building height requirement in Commerical/Industrial Zones

(Ord. 17191 § 37, 2011: Ord. 16267 § 27, 2008: Ord. 15971 § 94, 2007: Ord. 15606 § 16, 2006: Ord. 13190 § 18, 1998: Ord. 13022 § 18, 1998: Ord. 12987 § 4, 1998: Ord. 10870 § 354, 1993).

21A.12.180 Height - exceptions to limits. The following structures may be erected above the height limits of K.C.C. 21A.12.030-.050.

A. Roof structures housing or screening elevators, stairways, tanks, ventilating fans or similar equipment required for building operation and maintenance; and

B. Fire or parapet walls, skylights, flagpoles, chimneys, smokestacks, church steeples, crosses, spires, communication transmission and receiving structures, utility line towers and poles, and similar structures. (Ord. 10870 § 355, 1993).

21A.12.190 Height - limits near major airports. No building or structure shall be erected nor shall any tree be allowed to grow to a height in excess of the height limit established by the Airport Height Maps for the Seattle-Tacoma International Airport and the King County Airport (Boeing Field). (Ord. 10870 § 356, 1993).

21A.12.200 Lot or site divided by zone boundary. When a lot or site is divided by a zone boundary, the following applies:

A. If a lot or site contains both rural area or residential and nonresidential zoning, the zone boundary between the rural area or residential zone and the nonresidential zone shall be considered a lot line for determining permitted building height and required setbacks on the site.

B. If a lot or site contains residential zones of varying density:

1. Any residential density transfer within the lot or site shall be allowed if:

a. the density, as a result of moving dwelling units from one lot to another lot within a site or across zone lines within a single lot, does not exceed one hundred fifty percent of the base density on any of the lots or portions of a lot to which the density is transferred;

b. the transfer does not reduce the minimum density achievable on the lot or site;

c. the transfer enhances the efficient use of needed infrastructure;

d. the transfer does not result in significant adverse impacts to the low density portion of the lot or site;

e. the transfer contributes to preservation of environmentally sensitive areas, wildlife corridors, or other natural features; and

f. the transfer does not result in significant adverse impacts to adjoining lower density properties;

2. Residential density transfers from one lot to another lot within a site or from one portion of a lot to another portion of a lot across a zone line shall not be allowed in the RA zone;

3. Residential density transfers shall not be allowed to a lot or portion of a lot zoned R-1;

4. Compliance with the criteria in this subsection B shall be evaluated during review of any development proposals in which such a transfer is proposed; and

5. Residential density transfers from one lot to another lot within a site or from one portion of a lot to another portion of a lot across a zone line shall not, in of itself, be considered development above the base density for purposes of requiring a conditional use permit for apartments or townhouses in the R-1 through R-8 zones.

C. Uses on each portion of the lot shall only be those permitted in each zone in accordance with K.C.C. chapter 21A.08. (Ord. 17539 § 36, 2013: Ord. 14429 § 3, 2002: Ord. 14045 § 24, 2001: Ord. 11157 § 16, 1993: Ord. 10870 § 357, 1993).

21A.12.210 Sight distance requirements. Except for utility poles and traffic control signs, the following sight distance provisions shall apply to all intersections and new or reconstructed driveway access points on local access streets. Sight distance requirements for arterial and neighborhood collector intersections are specified in the King County road standards:

A. A sight distance triangle area as determined by Section 21A.12.210B shall contain no fence, berm, vegetation other than narrow tree trunks, on-site vehicle parking area, signs or other physical obstruction between 42 inches and eight feet above the existing street grade;

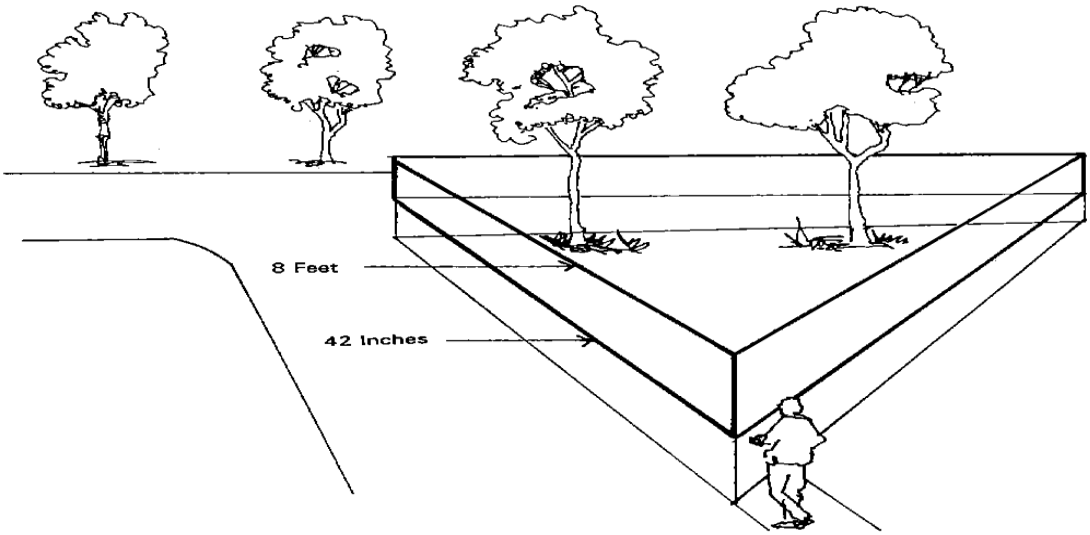

NOTE: The area of a sight distance triangle between 42 inches and eight feet above the existing street grade shall remain open.

B. The sight distance triangle requirements for new or reconstructed intersections and driveway connections to local access streets are defined as follows:

1. Except where a twenty-five foot property line radius exists at an intersection, a sight distance triangle at a street intersection shall be determined by measuring fifteen feet along both street property lines beginning at their point of intersection. The third side of the triangle shall be a line connecting the endpoints of the first two sides of the triangle. Where a twenty-five foot property line radius or larger radius is present at an intersection, the King County road standards shall govern the placement of objects that may obscure sight distance; or

2. A driveway access point shall be determined by measuring fifteen feet along the street lines and fifteen feet along the edges of the driveway beginning at the respective points of intersection. The third side of each triangle shall be a line connecting the endpoints of the first two sides of each triangle; and

C. The development engineer may require modification or removal of structures or landscaping located in required street setbacks or relocate the driveway connection, if:

1. Such improvements prevent adequate sight distance to drivers entering or leaving a driveway, and,

2. No reasonable driveway relocation alternative for an adjoining lot is feasible. (Ord. 16267 § 28, 2008: Ord. 10870 § 358, 1993).

21A.12.220 Nonresidential land uses in residential zones. Except for utility facilities, uses listed in K.C.C. 21A.08.100, and nonresidential uses regulated by 21A.12.230, all nonresidential uses located in the RA, UR, or R zones shall be subject to the following requirements:

A. Impervious surface coverage shall not exceed:

1. Forty percent of the site in the RA zone.
2. Seventy percent of the site in the UR and the R-1 through R-8 zones.
3. Eighty percent of the site in the R-12 through R-48 zones.

B. Buildings and structures, except fences and wire or mesh backstops, shall not be closer than 30 feet to any property line, except as provided in subsection C.

C. Single detached dwelling allowed as accessory to a church or school shall conform to the setback requirements of the zone.

D. Parking areas are permitted within the required setback area from property lines, provided such parking areas are located outside of the required landscape area.

E. Sites shall abut or be accessible from at least one public street functioning at a level consistent with King County Road Design Standards. New high school sites shall abut or be accessible from a public street functioning as an arterial per the King County Design Standards.

F. The base height shall conform to the zone in which the use is located.

G. Building illumination and lighted signs shall be designed so that no direct rays of light are projected into neighboring residences or onto any street right-of-way. (Ord. 11802 § 5, 1995: Ord. 11621 § 44, 1994: Ord. 10870 § 359, 1993).

21A.12.230 Personal services and retail uses in R-4 through R-48 zones. The general personal service use (SIC # 72 except 7216, 7218 and 7261) listed in K.C.C. 21A.08.050 and the retail uses, except agricultural crop sales, listed in K.C.C. 21A.08.070 which are located in the R-4 through R-48 zones shall be subject to the following requirements:

A. Each individual establishment shall not exceed 5,000 square feet of gross floor area and the combined total of all contiguous commercial establishments shall not exceed 15,000 square feet of gross floor area;

B. Establishments shall not be located less than one mile from another commercial establishment, unless located with other establishments meeting the criteria in paragraph A;

C. Establishment sites shall abut an intersection of two public streets, each of which is designated as a neighborhood collector or arterial and which has improved pedestrian facilities for at least 1/4th mile from the site;

D. The maximum on-site parking ratios for establishments and sites shall be 2 per 1000 square feet and required parking shall not be located between the building(s) and the street; and

E. Buildings shall comply with the building facade modulation and roofline variation requirements in K.C.C. 21A.14.080 and .090 and at least one facade of the building shall be located within five feet of the sidewalk.

F. If the personal service or retail use is located in a building with multifamily uses, then the commercial use shall be on the ground floor and shall not exceed 25 percent of the total floor area of the building.

G. Sign and landscaping standards for the use apply. (Ord. 12596 § 11, 1997: Ord. 10870 § 360, 1993).

21A.12.240 Joint use driveway and easement width. The minimum width for a joint use driveway and easement on private property shall be sixteen feet, except as otherwise provided in the King County road standards. (Ord. 16267 § 29, 2008).

21A.12.250 General personal service use, office/outpatient use allowed - restrictions.

The general personal service use (SIC # 72 except 7216, 7218 and 7261) and the office/outpatient clinic use (SIC # 801 - 04) listed in K.C.C. 21A.08.050 are allowed as a conditional use, subject to the following requirements:

A. The site shall be zoned R-4 through R-48;

B. The establishment shall be located within one-quarter mile of a rural town, unincorporated activity center, community business center or neighborhood business center and less than one mile from another commercial establishment;

C. The establishment shall be located in a legally established single family dwelling in existence on or before January 1, 2008. The structure may not be expanded by more than ten percent as provided in K.C.C. 21A.30.xxx for the expansion of legally established nonconforming uses;

D. The maximum on-site parking ratio for establishments and sites shall be 2 per 1000 square feet and required parking shall not be located between the building and the street; and

E. Sign and landscaping standards for the use apply. (Ord. 16267 § 30, 2008).

21A.12.260 Shoreline jurisdiction - density and dimensions apply - exceptions. The density and dimensions established in this chapter apply within the shoreline jurisdiction except as inconsistent with K.C.C. 21A.25.220. (Ord. 16985 § 110, 2010).

21A.14 DEVELOPMENT STANDARDS - DESIGN REQUIREMENTS

Sections:

21A.14.010 Purpose.
21A.14.020 General layout standards.
21A.14.025 Cottage housing development.
21A.14.030 Lot segregations - Zero lot line development.
21A.14.040 Lot segregations - clustered development.
21A.14.050 Lot segregations - UR zone reserve tract.
21A.14.060 Townhouse development.
21A.14.070 Attached dwellings and group residences - Applicability.
21A.14.080 Attached dwellings and group residences - Vehicular access and parking location.
21A.14.090 Attached dwellings and group residences - Building façade modulation.

21A.14.110 Mixed use development - Percentages of residential uses.
21A.14.120 Mixed use development - Residential density.
21A.14.130 Mixed use development - Building floor area.
21A.14.135 Mixed use development - design features.
21A.14.145 Mixed use development phasing - required plans, requirements, covenants, recordings -- review and approval.
21A.14.150 Mobile home parks - Standards for existing parks.
21A.14.160 Mobile home parks - Standards for new parks.
21A.14.170 Mobile home parks - Alternative design.
21A.14.180 On site recreation - space required.
21A.14.185 Recreation space - fees in lieu of.
21A.14.190 On-site recreation - play areas required.
21A.14.195 On-site recreation – financial guarantees for construction.
21A.14.200 On-site recreation - maintenance of recreation space or dedication.
21A.14.210 Storage space and collection points for recyclables.
21A.14.220 Fences.
21A.14.225 Hazardous liquid and gas transmission pipelines.
21A.14.230 Trail corridors - Applicability.
21A.14.240 Trail corridors - Design standards.
21A.14.250 Trail corridors - Maintenance of trail corridors/improvements.
21A.14.280 Rural industry development standards.
21A.14.300 Short subdivision or short subdivision alterations – adequacy of access – right of way use permits.
21A.14.310 Proposed formal subdivisions, short subdivisions or binding site plans – railroad buffer strips.
21A.14.320 Preliminary subdivision and short subdivision approval -- maintenance of private streets, easements and utilities required.
21A.14.330 Preliminary subdivision and short subdivision approval – covenants relating to keeping livestock in the RA zone.
21A.14.350 Rural equestrian community trail preservation – purpose.
21A.14.360 Rural equestrian community trails – general applicability.
21A.14.365 Rural equestrian community trails - notification.
21A.14.370 Rural equestrian community trails – authority.
21A.14.380 Rural equestrian community trails – location and design standards.
21A.14.390 Rural equestrian community trails – maintenance and operation.
21A.14.410 Rural equestrian community trails - annual report.

21A.14.010 Purpose. The purpose of this chapter is to improve the quality of development by providing building and site design standards that:

A. Reduce the visual impact of large residential buildings from adjacent streets and properties;

B. Enhance the aesthetic character of large residential buildings;

C. Contain sufficient flexibility of standards to encourage creative and innovative site and building design;

D. Meet the on-site recreation needs of project residents;

E. Enhance aesthetics and environmental protection through site design; and

F. Allow for continued or adaptive reuse of historic resources while preserving their historic and architectural integrity. (Ord. 11621 § 45, 1994: 10870 § 361, 1993).

21A.14.020 General layout standards. For residential developments in the UR and R zones:

A. The maximum length of blocks shall be 1,320 feet; and

B. Except for corner lots, lots for single detached dwellings shall not have street frontage along two sides unless one of said streets is a neighborhood collector street or an arterial street. (Ord. 10870 § 362, 1993).

21A.14.025 Cottage housing development. For cottage housing developments in the R4-R8 zones:

A. The total area of the common open space must be at least two hundred and fifty square feet per unit and at least fifty percent of the units must be clustered around the common space.

B. The total floor area of each unit, including any enclosed parking, is limited to one thousand two hundred square feet. The footprint of each unit, including any enclosed parking, is limited to nine hundred square feet. A front or wraparound porch of up to one hundred square feet is permitted and is not to be included in the floor area or footprint calculation.

C. Fences within the cottage housing unit development are limited to three feet in height. Fences along the perimeter of the cottage housing development are limited to six feet.

D. Individual cottage housing units must be at least ten feet apart. (Ord. 15245 § 8, 2005: Ord. 15032 § 18, 2004).

21A.14.030 Lot segregations - Zero lot line development. In any UR or R zone or in the NB zone on property designated commercial outside of center in the urban area, interior setbacks may be modified during subdivision or short subdivision review as follows:

A. If a building is proposed to be located within a normally required interior setback:

1. An easement shall be provided on the abutting lot of the subdivision that is wide enough to ensure a 10-foot separation between the walls of structures on adjoining lots, except as provided for common wall construction;

2. The easement area shall be free of permanent structures and other obstructions that would prevent normal repair and maintenance of the structure's exterior;

3. Buildings utilizing reduced setbacks shall not have doors that open directly onto the private yard areas of abutting property. Windows in such buildings shall not be oriented toward such private yard areas unless they consist of materials such as glass block, textured glass, or other opaque materials, and shall not be capable of being opened, except for clerestory-style windows or skylights; and

4. The final plat or short plat shall show the approximate location of buildings proposed to be placed in a standard setback area.

B. In the UR or R zones, setbacks on existing individual lots may be modified provided that the standards set forth in subsection A.1 of this section are met. (Ord. 12522 § 5, 1996: Ord. 11978 § 6, 1995: Ord. 10870 § 363, 1993).

21A.14.040 Lot segregations - clustered development. Residential lot clustering is allowed in the R, UR and RA zones. If residential lot clustering is proposed, the following requirements shall be met:

A. In the R zones, any designated open space tract resulting from lot clustering shall not be altered or disturbed except as specified on recorded documents creating the open space. Open spaces may be retained under ownership by the subdivider,

conveyed to residents of the development or conveyed to a third party. If access to the open space is provided, the access shall be located in a separate tract;

B. In the RA zone:

1. No more than eight lots of less than two and one-half acres shall be allowed in a cluster;

2. No more than eight lots of less than two and one-half acres shall be served by a single cul-de-sac street;

3. Clusters containing two or more lots of less than two and one-half acres, whether in the same or adjacent developments, shall be separated from similar clusters by at least one hundred twenty feet;

4. The overall amount, and the individual degree of clustering shall be limited to a level that can be adequately served by rural facilities and services, including, but not limited to, on-site sewage disposal systems and rural roadways;

5. A fifty-foot Type II landscaping screen, as defined in K.C.C. 21A.16.040, shall be provided along the frontage of all public roads when adjoining differing types of development such as commercial and industrial uses, between differing types of residential development and to screen industrial uses from the street. The planting materials shall consist of species that are native to the Puget Sound region. Preservation of existing healthy vegetation is encouraged and may be used to augment new plantings to meet the requirements of this section;

6. Except as provided in subsection B.7. of this section, open space tracts created by clustering in the RA zone shall be designated as permanent open space. Acceptable uses within open space tracts are passive recreation, with no development of active recreational facilities, natural-surface pedestrian and equestrian foot trails and passive recreational facilities. A resource tract created under K.C.C. 16.82.152.E. may be considered an open space tract for purposes of this subsection B.6;

7.a. In the RA zone a resource tract may be created through a cluster development in lieu of an open space tract. A resource tract created under K.C.C. 16.82.152.E. may be considered a resource tract for purposes of this subsection B.7. The resource tract may be used as a working forest or farm if:

(1) the department determines the resource tract is suitable for forestry or agriculture; and

(2) the applicant submits a forest management plan prepared by a professional forester that has been approved by the King County department of natural resources and parks, or a farm management plan developed by the King Conservation District. The management plan must:

(a) ensure that forestry or farming will remain as a sustainable use of the resource tract ;

(b) set impervious surface and clearing limitations and identify the type of buildings or structures that will be allowed within the resource tract; and

(c) if critical areas are included in the resource tract, clearly distinguish between the primary purpose of the resource portion of the tract and the primary purpose of the critical area portion of the tract as required under K.C.C. 21A.24.180.

b. The recorded plat or short plat shall designate the resource tract as a working forest or farm.

c. If the applicant conveys the resource tract to residents of the development, the resource tract shall be retained in undivided interest by the residents of the subdivision or short subdivision.

d. A homeowners association shall be established to ensure implementation of the forest management plan or farm management plan if the resource tract is retained in undivided interest by the residents of the subdivision or short subdivision.

e. The applicant shall file a notice with the King County department of executive services, records and licensing services division. The required contents and form of the notice shall be set forth in a public rule. The notice shall inform the property owner or owners that the resource tract is designated as a working forest or farm, that must be managed in accordance with the provisions established in the approved forest management plan or farm management plan.

f. The applicant shall provide to the department proof of the approval of the forest management plan or farm management plan and the filing of the notice required in subsection B.7.g. of this section before recording of the final plat or short plat.

g. The notice shall run with the land.

h. Natural-surface pedestrian and equestrian foot trails, passive recreation, and passive recreational facilities, with no development of active recreational facilities, are allowed uses in resource tracts; and

8. The requirements of subsection B.1., 2., or 3. of this subsection may be modified or waived by the director if the property is encumbered by critical areas containing habitat for, or there is the presence of, species listed as threatened or endangered under the Endangered Species Act when it is necessary to protect the habitat; and

C. In the R-1 zone, open space tracts created by clustering required by K.C.C. 21A.12.030 shall be located and configured to create urban separators and greenbelts as required by the Comprehensive Plan, or subarea plans or open space functional plans, to connect and increase protective buffers for critical areas, to connect and protect wildlife habitat corridors designated by the Comprehensive Plan and to connect existing or planned public parks or trails. The department may require open space tracts created under this subsection to be dedicated to an appropriate managing public agency or qualifying private entity such as a nature conservancy. In the absence of such a requirement, open space tracts shall be retained in undivided interest by the residents of the subdivision or short subdivision. A homeowners association shall be established for maintenance of the open space tract. (Ord. 17539 § 37, 2013: Ord. 16267 § 31, 2008: Ord. 15971 § 95, 2007: Ord. 15606 § 17, 2006: Ord. 15051 § 129, 2004: Ord. 15032 § 19, 2004: Ord. 14199 § 234, 2001: Ord. 14259 § 8, 2001: Ord. 14045 § 25, 2001: Ord. 13022 § 19, 1998: Ord. 12822 § 8, 1997: Ord. 11621 § 47, 1994: 10870 § 364, 1993).

21A.14.050 Lot segregations - UR zone reserve tract. Subdivision of UR zoned property of ten or more acres shall be required to be clustered and a reserve tract shall be created for future development in accordance with the following:

A. The reserve tract shall be no less than seventy-five percent of the net developable area of the property to be subdivided.

B. The reserve tract shall be configured to contain lands with topography and natural features that allow future conversion of the reserve tract to residential development at urban densities.

C. The reserve tract may contain a single dwelling unit, only if:

1. The unit was included in the overall density calculations for the original subdivision creating the reserve tract; and

2. The unit was noted on the face of the original subdivision (plat or short plat).

D. The reserve tract shall not be altered or disturbed except as specified on the face of the original subdivision (plat or short plat).

E. The reserve tract may be retained under the ownership of the subdivider, conveyed to residents of the subdivisions, or conveyed to a third party. Regardless of ownership of the reserve tract, all restrictions relative to the reserve tract shall apply.

F. The reserve tract shall not be used to satisfy the recreation space requirement of the original subdivision.

G. The layout of the lots and roadways created in the original subdivision shall facilitate future development of the reserve tract.

H. The reserve tract shall not be eligible for further subdivision until such time that reclassification of the reserve tract occurs in accordance with the community plan area zoning process outlined in K.C.C. 20.08.030.

I. Any proposed subsequent development on the reserve tract shall be governed by the development standards in effect at the time of such development. (Ord. 15032 § 20, 2004: Ord. 15032 § 20, 2004: Ord. 10870 § 365, 1993).

21A.14.060 Townhouse development. In the R-1 through R-8 zones and in the NB zone on property designated commercial outside of center in the urban area, a building that contains a grouping of attached townhouse units shall not exceed a 200-foot maximum length without a separation of at least 10 feet from other groupings or rows of townhouses. (Ord. 12522 § 6, 1996: Ord. 11978 § 7, 1995: Ord. 10870 § 366, 1993).

21A.14.070 Attached dwellings and group residences - Applicability. The standards of K.C.C. 21A.14.080 through 21A.14.090 shall apply to all new apartment developments exceeding four dwelling units, new townhouse development and new group residences except Class I Community Residential Facilities ("CRF-I"). Expansions of existing development that involve four or more dwelling units shall be subject to compliance with K.C.C. 21A.14.080 to 21A.14.090. (Ord. 13086 § 3, 1998: Ord. 10870 § 367, 1993).

21A.14.080 Attached dwellings and group residences - Vehicular access and parking location.

A. On sites abutting an alley constructed to a width of at least 20 feet, apartment and townhouse development and all group residences except Class I Community Residential Facilities ("CRF-I") shall have parking areas placed to the rear of buildings with primary vehicular access via the alley, except when waived by the director due to physical site limitations.

B. When alley access is provided, no additional driveway access from the public street shall be allowed except as necessary to access parking under the structure or for fire protection.

C. When the number of uncovered common parking spaces for attached dwellings and group residences exceed 30 spaces and when there is alley access, no more than 50 percent of these uncovered parking spaces shall be permitted between the street property line and any building, except when authorized by the director due to physical site limitations. (Ord. 11978 § 8, 1995: Ord. 10870 § 368, 1993).

21A.14.090 Attached dwellings and group residences - Building facade modulation. Apartment and townhouse developments and all group residences shall provide building facade modulation on facades exceeding 60 feet and facing abutting streets or properties zoned R-1 through R-4. The following standards shall apply:

A. The maximum wall length without modulation shall be 30 feet; and

B. The sum of the modulation depth and the modulation width shall be no less than eight feet. Neither the modulation depth nor the modulation width shall be less than two feet.

C. Any other technique approved by the director that achieves the intent of this section. (Ord. 11978 § 9, 1995: Ord. 10870 § 369, 1993).

21A.14.110 Mixed use development - Percentages of residential uses. Residential uses in mixed use developments shall be subject to the following limits:

A. A maximum of fifty percent of the total built floor area when located in NB zones; and

B. A maximum of seventy-five percent of the total built floor area when located in CB, RB and O zones provided that the total percentage may be increased by an additional ten percent with the approval of the director. (Ord. 11978 § 11, 1995: Ord. 10870 § 371, 1993).

21A.14.120 Mixed use development - Residential density. Base residential density for mixed use developments shall be determined using total site area according to K.C.C. 21A.12.040A. (Ord. 10870 § 372, 1993).

21A.14.130 Mixed use development - Building floor area.

A. For mixed use developments that utilize at least 25 percent of building square footage for residential uses in the NB zone and at least 50 percent of building square footage in the CB, RB or O zones, the building floor area ratio shall be as follows:

1. 1.5/1 in NB zones;
2. 3.5/1 in CB zones; and
3. 4.0/1 in RB and O zones;

B. Building floor area ratios of subsection A may be increased when all required parking is contained within a common parking structure, as follows:

1. 2.0/1 in NB zones;
2. 4.5/1 in CB zones; and
3. 5.0/1 in RB and O zones. (Ord. 11978 § 12, 1995: Ord. 10870 § 373, 1993).

21A.14.135 Mixed use development – design features. Mixed-use development permitted by K.C.C. chapter 21A.08 shall incorporate the following design features:

A. Residential and nonresidential uses proposed for mixed-use development shall be only those uses permitted in the zone, as established by K.C.C. chapter 21A.08;

B. If residential and nonresidential uses are proposed for the same structure, nonresidential uses shall occupy the lower levels. The director may waive this requirement under the following circumstances:

1. If the structure is located on a sloping lot that provides access from upper levels or from multiple levels. In such cases, the nonresidential use may be located on the levels that exit onto the primary pedestrian streets; or
2. If views from the upper levels are valuable amenities that would help assure success of the nonresidential uses, such as a restaurant;

C. Mixed-use development shall provide off-street parking behind or to the side of buildings, or enclosed within buildings consistent with K.C.C. 21A.18.030. Relief from this requirement may be granted by the director only if the applicant can demonstrate that there is no practical site design to meet this requirement. The director may allow only the number of parking spaces that cannot be accommodated to the rear or sides of buildings, or enclosed within buildings, to be located to the front of buildings. A twenty percent reduction of required parking is allowed if a mixed-use development meets the criteria of K.C.C. 21A.18.040 for shared parking. (Ord. 14045 § 26, 2001).

21A.14.145 Mixed use development - phasing - required plans, requirements, covenants, recordings -- review and approval. When residential and commercial uses are proposed to be contained in separate structures and the structures containing residential uses are proposed to be built prior to those containing commercial uses, then a commercial site development permit shall be required and as well as the following:

A. The applicant shall submit a site plan showing the entire mixed use development. The plan shall show project features including the location of the residential and commercial structures, parking areas, landscaping planters, sidewalks, and pedestrian linkages. The plan shall be drawn to scale and provide sufficient detail to ensure all zoning and development standards are met for the entire development.

B. Infrastructure plans, including storm drainage facilities, shall be sized to accommodate the needs of the entire mixed use development. The infrastructure shall be installed with the first phase of the development up to or near the commercial building(s) unless the applicant demonstrates to the department's satisfaction that there is potential for significant damage to the infrastructure during the construction of any later phase of construction.

C. For the purpose of informing future property owners of limitations on future development because of the mixed use provisions of this title, the applicant shall record a covenant on the property that states the restrictions upon the remaining portions of the site that they shall only be used for commercial uses. The covenant shall be recorded prior to the issuance of the building permit for the residential structure(s). The covenant shall be subject to review and approval by the department. (Ord. 13851 § 1, 2000).

21A.14.150 Mobile home parks - Standards for existing parks.

A. Mobile home parks established prior to the effective date of this code shall continue to be governed by all standards relating to density, setbacks, landscaping and off-street parking in effect at the time they were approved.

B. Placement of new accessory structures and replacement mobile homes, either standard or nonstandard, in these mobile home parks shall be governed by the dimensional standards in effect when the parks were approved, unless two or more replacement mobile homes are proposed to be installed adjacent to each other under the flexible setback option set forth in K.C.C. 21A.14.170. Where internal setbacks are not specified, the average of the prevailing setbacks on the pads to either side of the proposed new or replacement structure shall apply.

C. No spaces or pads in an existing mobile home park shall be used to accommodate recreational vehicles (RVs), except when the spaces or pads were specifically for RVs at the time the park was established.

D. An existing mobile home park may be enlarged, provided the proposed enlargement meets the standards set forth in K.C.C. 21A.14.160 and K.C.C. 21A.14.170.

E. Both insignia and non-insignia mobile homes may be installed in established parks, provided that all mobile homes supported by piers shall be fully skirted, and that nonstandard mobile homes shall meet the minimum livability and safety requirements set forth in K.C.C. Title 16, Building Code and Construction Standards. (Ord. 10870 § 375, 1993).

21A.14.160 Mobile home parks - Standards for new parks. New mobile home parks shall be developed subject to the following standards:

A. A mobile home park shall be at least three acres in area;

B. Residential densities in a mobile home park shall be as follows:

1. Six dwellings per acre in R-4 zone;

2. The base density of the zone in which the park is located in all R-6 through R-48 zones; and

3. Mobile home parks shall be eligible to achieve the maximum density permitted in the zone by providing the affordable housing benefit for mobile home parks set forth in K.C.C. 21A.34;

C. Both insignia and non-insignia mobile homes may be installed in mobile home parks, provided that non-insignia mobile homes shall meet the minimum livability and safety requirements set forth in K.C.C. Title 16, Building Code;

D. A mobile home park shall be exempt from impervious surface limits set forth in K.C.C. 21A.12;

E. At least one of the off-street parking spaces required for each mobile home shall be located on or adjacent to each mobile home pad;

F. Internal roads and sidewalks shall provide access to each mobile home space and shall be constructed in accordance with the adopted King County road standards for residential minor access streets;

G. There shall be a minimum of ten feet of separation maintained between all mobile homes on the site, unless the flexible setback option set forth in K.C.C. 21A.14.170 is used. Accessory structures shall be located no closer than:

1. Ten feet to mobile homes on adjacent spaces, unless constructed of noncombustible materials, in which case the minimum setback shall be five feet;

2. Five feet to accessory structures of mobile homes on adjacent spaces; and

3. Five feet to the mobile home or other accessory structures on the same space, except a carport or garage may be attached to the mobile home, and the separation may be waived when such structures are constructed of noncombustible materials;

H. All mobile homes and RVs supported by piers shall be fully skirted; and

I. A mobile home park may include a storage area for RVs owned by residents of the park, provided the storage area contains no utility hook-ups and no RV within the storage area shall be used as living quarters. (Ord. 11802 § 6, 1995: Ord. 10870 § 376, 1993).

21A.14.170 Mobile home parks - Alternative design standards. As an alternative to the building separation and internal street standards of K.C.C. 21A.14.160:

A. Building separation requirements or setbacks between mobile homes and accessory structures on adjacent spaces may be modified, provided:

1. The common walls meet the fire protection standards set forth in the International Building Code and the standards set forth in the International Fire Code for duplexes, multifamily and condominium developments, as applicable; and

2. Rental agreement clauses, by-laws or other legal mechanisms stipulate maintenance responsibilities for structures, fences and yards;

B. Private streets may be used with a minimum driving surface of 22 feet in width, provided:

1. The streets comply in all other respects with the road standards;

2. All required parking is located off-street and as specified in K.C.C. 21A.14.160.E; and

3. Such streets shall not:

a. directly connect two or more points of vehicular access to the park; or

b. serve over 100 dwelling units within the park. (Ord. 17837 § 89, 2014: Ord. 10870 § 377, 1993).

21A.14.180 On-site recreation - space required.

A. Residential developments, other than cottage housing developments, of more than four units in the UR and R-4 through R-48 zones, stand-alone townhouse developments in the NB zone on property designated commercial outside of center in the urban area of more than four units, and mixed-use developments of more than four units, shall provide recreation space for leisure, play and sport activities as follows:

1. Residential subdivision, townhouses and apartments developed at a density of eight units or less per acre: three hundred ninety square feet per unit;

2. Mobile home park: two hundred sixty square feet per unit;

3. Residential subdivisions developed at a density of greater than eight units per acre: one hundred seventy square feet per unit; and

4. Apartments and townhouses developed at a density of greater than eight units per acre and mixed use:

a. Studio and one bedroom: ninety square feet per unit;

b. Two bedrooms: one hundred seventy square feet per unit; and

c. Three or more bedrooms: one hundred seventy square feet per unit.

B. Recreation space shall be placed in a designated recreation space tract if part of a subdivision. The tract shall be dedicated to a homeowner's association or other workable organization acceptable to the director, to provide continued maintenance of the recreation space tract consistent with K.C.C. 21A.14.200.

C. Any recreation space located outdoors that is not part of a storm water tract developed in accordance with subsection F. of this section shall:

1. Be of a grade and surface suitable for recreation improvements and have a maximum grade of five percent;

2. Be on the site of the proposed development;

3. Be located in an area where the topography, soils, hydrology and other physical characteristics are of such quality as to create a flat, dry, obstacle-free space in a configuration that allows for passive and active recreation;

4. Be centrally located with good visibility of the site from roads and sidewalks;

5. Have no dimensions less than thirty feet, except trail segments;

6. Be located in one designated area, unless the director determines that residents of large subdivisions, townhouses and apartment developments would be better served by multiple areas developed with recreation or play facilities;

7. Have a street roadway or parking area frontage along ten percent or more of the recreation space perimeter, except trail segments, if the required outdoor recreation space exceeds five thousand square feet and is located in a single detached or townhouse subdivision;

8. Be accessible and convenient to all residents within the development; and

9. Be located adjacent to, and be accessible by, trail or walkway to any existing or planned municipal, county or regional park, public open space or trail system, which may be located on adjoining property.

D. Indoor recreation areas may be credited towards the total recreation space requirement, if the director determines that the areas are located, designed and improved in a manner that provides recreational opportunities functionally equivalent to those recreational opportunities available outdoors. For senior citizen assisted housing, indoor recreation areas need not be functionally equivalent but may include social areas, game and craft rooms, and other multipurpose entertainment and education areas.

E. Play equipment or age appropriate facilities shall be provided within dedicated recreation space areas according to the following requirements:

1. For developments of five dwelling units or more, a tot lot or children's play area, that includes age appropriate play equipment and benches, shall be provided consistent with K.C.C. 21A.14.190;

2. For developments of five to twenty-five dwelling units, one of the following recreation facilities shall be provided in addition to the tot lot or children's play area:

a. playground equipment;

b. sport court;

c. sport field;

d. tennis court; or

e. any other recreation facility proposed by the applicant and approved by the director;

3. For developments of twenty-six to fifty dwelling units, at least two or more of the recreation facilities listed in subsection E.2. of this section shall be provided in addition to the tot lot or children's play area; and

4. For developments of more than fifty dwelling units, one or more of the recreation facilities listed in subsection E.2. of this section shall also be provided for every twenty-five dwelling units in addition to the tot lot or children's play area. If calculations result in a fraction, the fraction shall be rounded to the nearest whole number as follows:

a. Fractions of 0.50 or above shall be rounded up; and

b. Fractions below 0.50 shall be rounded down.

F. In subdivisions, recreation areas that are contained within the on-site stormwater tracts, but are located outside of the one hundred year design water surface, may be credited for up to fifty percent of the required square footage of the on-site recreation space requirement on a foot-per-foot basis, subject to the following criteria:

1. The stormwater tract and any on-site recreation tract shall be contiguously located. At final plat recording, contiguous stormwater and recreation tracts shall be recorded as one tract and dedicated to the homeowner's association or other organization as approved by the director;

2. The drainage facility shall be constructed to meet the following conditions:

a. The side slope of the drainage facility shall not exceed thirty-three percent unless slopes are existing, natural and covered with vegetation;

b. A bypass system or an emergency overflow pathway shall be designed to handle flow exceeding the facility design and located so that it does not pass through active recreation areas or present a safety hazard;

c. The drainage facility shall be landscaped and developed for passive recreation opportunities such as trails, picnic areas and aesthetic viewing; and

d. The drainage facility shall be designed so they do not require fencing under the King County Surface Water Design Manual.

G. When the tract is a joint use tract for a drainage facility and recreation space, King County is responsible for maintenance of the drainage facility only and requires a drainage easement for that purpose.

H. A recreation space plan shall be submitted to the department and reviewed and approved with engineering plans.

1. The recreation space plans shall address all portions of the site that will be used to meet recreation space requirements of this section, including drainage facility. The plans shall show dimensions, finished grade, equipment, landscaping and improvements, as required by the director, to demonstrate that the requirements of the on-site recreation space in K.C.C. 21A.14.180 and play areas in K.C.C. 21A.14.190 have been met.

2. If engineering plans indicate that the on-site drainage facility or stormwater tract must be increased in size from that shown in preliminary approvals, the recreation plans must show how the required minimum recreation space under K.C.C. 21A.14.180.A. will be met. (Ord. 17841 § 32, 2014: Ord. 15606 § 18, 2006: Ord. 15051 § 130, 2004: Ord. 14429 § 4, 2002: Ord. 14045 § 31, 2001: Ord. 12522 § 7, 1996: Ord. 11978 § 13, 1995: Ord. 11621 § 48, 1994: Ord. 10870 § 378, 1993).

21A.14.185 Recreation space - fees in lieu of.

A. The creation of on-site recreation space shall be the preferred method of providing new development with opportunities for leisure, play and sports activities. Applicants shall to the best of their ability endeavor to provide recreation space on the project site. However, if on-site recreation space is not provided in accordance with K.C.C. 21A.14.180, the applicant shall pay a fee-in-lieu of actual recreation space if approved by King County. King County acceptance of a fee-in-lieu payment is discretionary. A fee-in-lieu of on-site recreation space may be permitted if the recreation space provided within a county park in the vicinity will be of greater benefit to the prospective residents of the development.

B. Fees shall be determined annually by the department of natural resources and parks on the basis of the projected market value of the required recreation space land area after development. Any recreational space provided by the applicant shall be credited toward the required fees.

C. If recreation space credit is applied to stormwater facilities in accordance with K.C.C. 21A.14.180E, the development loses its option to request a fee-in-lieu and the remainder of the required recreation space and play area must be provided on site. (Ord. 17841 § 33, 2014: Ord. 14045 § 32, 2001: Ord. 11621 § 49, 1994).

21A.14.190 On-site recreation – play areas required.

A. All single detached subdivisions, apartment, townhouse and mixed-use developments, of more than four units in the UR and R-4 through R-48 zones and stand-alone townhouse developments in the NB zone of more than four units on property designated commercial outside of center in the urban area, excluding age-restricted senior citizen housing, shall provide children play areas within the recreation space on-site, except if facilities are available to the public that meet all of the following:

1. Developed as a county, municipal or regional park;
2. Located within one quarter mile walking distance; and
3. Accessible without crossing any arterial street.

B. Play area designs shall:

1. Provide at least forty five square feet per dwelling unit, with a minimum size of four hundred square feet;
2. Be adjacent to main pedestrian paths or near building entrances;
3. Meet the requirements of K.C.C. 21A.14.180; and
4. Provide play equipment that meets, at a minimum, the Consumer Product Safety Standards for equipment, soft surfacing and spacing. (Ord. 14045 § 33, 2001: Ord. 13022 § 20, 1998: Ord. 10870 § 379, 1993).

21A.14.195 On-site recreation – financial guarantees for construction. Financial guarantees for construction of recreation facilities required under K.C.C. 21A.14.180 and 21A.14.190 shall be provided consistent with K.C.C. Title 27A. (Ord. 14045 § 35, 2001).

21A.14.200 On-site recreation - maintenance of recreation space or dedication.

A. Recreation space that meets the criteria in K.C.C. 21A.14.180.C may, at the discretion of the department of natural resources and parks, be dedicated as a park open to the public in lieu of providing the on-site recreation required under K.C.C. 21A.14.180 if the following criteria are met:

1. The dedicated area is at least ten acres in size, unless when adjacent to an existing or planned county park;

2. The dedicated land provides one or more of the following:

a. shoreline access;

b. regional trail linkages;

c. habitat linkages;

d. recreation facilities; or

e. heritage sites; and

3. The dedicated area is located within one mile of the project site.

B. Unless the recreation space is dedicated to King County in accordance with subsection A of this section, maintenance of any recreation space retained in private ownership shall be the responsibility of the owner or other separate entity capable of long-term maintenance and operation in a manner acceptable to the parks department. (Ord. 17841 § 34, 2014: Ord. 14045 § 34, 2001: Ord. 13022 § 21, 1998: Ord. 10870 § 380, 1993).

21A.14.210 Storage space and collection points for recyclables. Developments shall provide storage space for the collection of recyclables as follows:

A. The storage space shall be provided at the following rates, calculated based on any new dwelling unit in multiple-dwelling developments and any new square feet of building gross floor area in any other developments:

1. One and one-half square feet per dwelling unit in multiple-dwelling developments except where the development is participating in a county-sponsored or approved direct collection program in which individual recycling bins are used for curbside collection;

2. Two square feet per every 1,000 square feet of building gross floor area in office, educational and institutional developments;

3. Three square feet per every 1,000 square feet of building gross floor area in manufacturing and other nonresidential developments; and

4. Five square feet per every 1,000 square feet of building gross floor area in retail developments.

B. The storage space for residential developments shall be apportioned and located in collection points as follows:

1. The required storage area shall be dispersed in collection points throughout the site when a residential development comprises more than one building.

2. There shall be one collection point for every 30 dwelling units.

3. Collection points may be located within residential buildings, in separate buildings/structures without dwelling units, or outdoors.

4. Collection points located in separate buildings/structures or outdoors shall be no more than 200 feet from a common entrance of a residential building.

5. Collection points shall be located in a manner so that the swing of any collection point gate does not obstruct pedestrian or vehicle traffic or access to parking or that the gate swing or any hauling truck does not project into any public right-of-way.

C. The storage space for nonresidential developments shall be apportioned and located in collection points as follows:

1. Storage space may be allocated to a centralized collection point.

2. Outdoor collection points shall not be located in any required setback areas.

3. Collection points shall be located in a manner so that the swing of any collection point gate does not obstruct pedestrian or vehicle traffic or access to parking or that the gate swing or any hauling truck does not project into any public right-of-way.

4. Access to collection points may be limited, except during regular business hours and/or specified collection hours.

D. The collection points shall be designed as follows:

1. Dimensions of the collection points shall be of sufficient width and depth to enclose containers for recyclables.

2. Architectural design of any structure enclosing an outdoor collection point or any building primarily used to contain a collection point shall be consistent with the design of the primary structure(s) on the site.

3. Collection points shall be identified by signs not exceeding two square feet.

4. A six-foot wall or fence shall enclose any outdoor collection point, excluding collection points located in industrial developments that are greater than 100 feet from residentially zoned property.

5. Enclosures for outdoor collection points and buildings used primarily to contain a collection point shall have gate openings at least 12 feet wide for haulers. In addition, the gate opening for any building or other roofed structure used primarily as a collection point shall have a vertical clearance of at least 12 feet.

6. Weather protection of recyclables shall be ensured by using weather-proof containers or by providing a roof over the storage area.

E. Only recyclable materials generated on-site shall be collected and stored at such collection points. Except for initial sorting of recyclables by users, all other processing of such materials shall be conducted off-site.

F. The director may waive or modify specific storage space and collection point requirements set forth in this section if the director finds, in writing, that an alternate recycling program design proposed by the applicant meets the needs of the development and provides an equivalent or better level of storage and collection for recyclables. (Ord. 12461 § 1, 1996: Ord. 10870 § 381, 1993).

21A.14.220 Fences. Fences are permitted as follows:

A. Fences exceeding a height of six feet shall comply with the applicable street and interior setbacks of the zone in which the property is located, except:

1. Fences located on a rockery, retaining wall, or berm within a required setback area are permitted subject to the following requirements;

a. In R-1 through R-18, UR, RA and the resource zones:

(1) The total height of the fence and the rockery, retaining wall or berm upon which the fence is located shall not exceed a height of ten feet. This height shall be measured from the top of the fence to the ground on the low side of the rockery, retaining wall or berm; and

(2) The total height of the fence itself, measured from the top of the fence to the top of the rockery, retaining wall or berm, shall not exceed six feet.

b. In the R-24, R-48 and commercial/industrial zones, the height of the fence, measured from the top of the fence to the top of the rockery, retaining wall or berm, shall not exceed six feet.

c. Any portion of the fence above a height of eight feet, measured to include both the fence and the rockery, retaining wall, or berm (as described in a1. above), shall be an open-work fence.

d. The height limitation of this subsection may be exceeded where walls with fences cross a setback perpendicularly or abut a critical area tract established under K.C.C. chapter 21A.24.

B. Fences located on a rockery, retaining wall or berm outside required setback areas shall not exceed the building height for the zone, measured in accordance with the standards established in the King County Building Code, Title 16.

RETAINING WALL WITH FENCE IN SETBACK

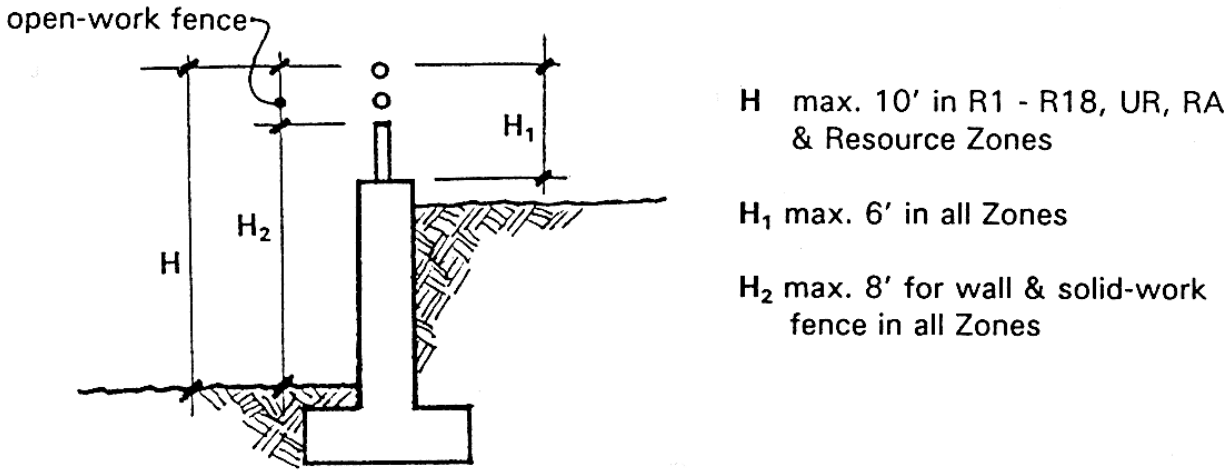

C. Electric fences shall:

1. Be permitted in all zones, provided that when placed within R-4 through R-48 zones, additional fencing or other barriers shall be constructed to prevent inadvertent contact with the electric fence from abutting property;

2. Comply with the following requirements:

a. An electric fence using an interrupted flow of current at intervals of about one second on and two seconds off shall be limited to 2,000 volts at 17 milliamp;

b. An electric fence using continuous current shall be limited to 1,500 volts at seven milliamp;

c. All electric fences in the R-4 through R-48 zones shall be posted with permanent signs a minimum of 36 square inches in area at 50 foot intervals stating that the fence is electrified; and

d. Electric fences sold as a complete and assembled unit can be installed by an owner if the controlling elements of the installation are certified by an A.N.S.I. approved testing agency; and

D. Except as specifically required for the necessary security related to a nonresidential use, no barbed or razor-wire fence shall be located in any R-4 through R-48 zone. (Ord. 16267 § 32, 2008: Ord. 12987 § 5, 1998: Ord. 11621 § 50, 1994: 10870 § 382, 1993).

21A.14.225 Hazardous liquid and gas transmission pipelines.

A. Tracts and easements containing hazardous liquid and gas transmission pipelines and required setbacks from such pipelines may include the following uses, subject to other regulations applicable to each use and approval of the holder of the easement: utility structures not normally occupied necessary for the operation of the pipeline, landscaping, trails, open space, keeping of animals, agriculture, forestry, commercial signage, minor communication facilities and the utility structures not normally occupied necessary for the operation of the minor communication facility, and other compatible uses as specified on the face of the recorded plat or short plat; provided that structures designed for human occupancy shall never be allowed within pipeline tracts, easements or setbacks.

B. Hazardous liquid and gas transmission pipelines shall not be located in aquifer recharge areas, landslide hazard areas or erosion hazard areas. When it is

impractical to avoid such areas, special engineering precautions should be taken to protect public health, safety and welfare. (Ord. 14045 § 30, 2001).

21A.14.230 Trail corridors - Applicability. Trail easements shall be provided by any development, except for single detached residential permits, when such developments are located within any community or regional trail corridor identified by an adopted King County Functional Plan or Community Plan identifying community and/or regional trail systems. The residents or tenants of the development shall be provided access to the trail easement. The area of the trail easement shall be counted as part of the site for purposes of density and floor area calculations. (Ord. 10870 § 383, 1993).

21A.14.240 Trail corridors - Design standards. Trail design shall be reviewed by the department for consistency with adopted standards for:

A. Width of the trail corridor;

B. Location of the trail corridor on the site;

C. Surfacing improvements; and

D. Use(s) permitted within the corridor. (Ord. 17420 § 100, 2012: Ord. 11621 § 51, 1994: Ord. 10870 § 384, 1993).

21A.14.250 Trail corridors - Maintenance of trail corridors/improvements. Maintenance of any trail corridor or improvements, retained in private ownership, shall be the responsibility of the owner or other separate entity capable of long-term maintenance and operation in a manner acceptable to the parks division. (Ord. 10870 § 385, 1993).

21A.14.280 Rural industry development standards.

A. The purpose of the rural industries section is to establish standards for industrial (I) zoned development in rural areas. Site and building designs, buffering, compatible commercial and industrial uses are required to maintain rural character.

B. The following development standards shall apply to uses locating in the industrial (I) zone within the rural area;

1. All uses occurring outside an enclosed building shall be screened from adjoining rural residential uses;

2. All buildings shall be set back fifty-feet from perimeter streets and from rural area and residential zones;

3. The total permitted floor area\lot area ratio shall not exceed one hundred percent for a development consisting of multiple lots and one hundred twenty-five percent on any individual building lot;

4. The total permitted impervious lot coverage shall not exceed seventy percent for a development consisting of multiple lots and eighty percent on any individual building lot;

5. The landscaping standards in K.C.C. chapter 21A.16 are modified as follows:

a. Twenty-foot-wide Type II landscaping shall be provided along exterior streets,

b. Twenty-foot-wide Type I landscaping shall be provided along property lines adjacent to rural residential zoned areas; and

c. Fifteen-foot-wide Type II landscaping shall be provided along lines adjacent to nonresidential zoned areas.

6. Outdoor lighting shall be focused downward and configured to minimize intrusion of light into surrounding rural residential areas;

7. Refuse collection/recycling areas and loading or delivery areas shall be located at least one hundred feet from rural area and residential zones and screened with a solid view obscuring barrier;

8. Off street parking standards shall be no less than one space for every one thousand square feet of floor area and no greater than one space for every five hundred square feet of floor area;

9. Sign are allowed as follows:

a. Signs shall not exceed an area of sixty-four square feet per sign;

b. Pole signs shall not be permitted; and

c. Signs shall not be internally illuminated;

10. The director shall approve building design, materials and color. Buildings shall be designed and use accent materials (e.g. wood and brick), nonreflective glass, and muted colors to be compatible with rural character; and

11. Building height shall be limited to forty feet. (Ord. 17539 § 38, 2013: Ord. 11621 § 99, 1994).

21A.14.300 Short subdivisions or short subdivision alterations -- adequacy of access – right of way use permits.

A. Each lot within the short subdivision or short subdivision alteration shall have acceptable access to a street conforming to county road standards or to a lower level of improvement acceptable to the road engineer. Individual lots may be served by access panhandles established either by fee ownership or easement, subject to approval of the division. In order to assure safe and adequate access, the manager:

1. May approve private streets, provided the private street requirements contained in Section 2.05, Private Streets, of the county road standards as adopted in K.C.C. chapter 14.42 are met;

2. May limit direct access to certain streets and require on-site public or private streets in lieu of individual driveways or access panhandles, in accordance with the county road standards;

3. Shall require off-site improvements to public or private streets needed to provide access from the short subdivision to a road acceptable to the road engineer; and

4. Shall assure that the number of lots to be served by the road system complies with the road standards.

B. Short subdivisions involving construction within county right-of-way shall obtain a right-of-way use permit pursuant to K.C.C. chapter 14.28. (Ord. 13694 § 87, 1999).

Reviser's note: Definitions, Ordinance 13694: See K.C.C. chapter 19A.04.

21A.14.310 Proposed formal subdivisions, short subdivisions or binding site plans – railroad buffer strips. Where railroads abut proposed formal subdivisions, short subdivisions or binding site plans, measures to provide a physical separation between the two uses shall be required. These measures may include the use: grade separations, setbacks or barriers such as walls and fences. (Ord. 13694 § 88, 1999).

Reviser's note: Definitions, Ordinance 13694: See K.C.C. chapter 19A.04.

21A.14.320 Preliminary subdivision and short subdivision approval – maintenance of private streets, easements and utilities required. As a condition of

preliminary subdivision and short subdivision approval, all private streets, easements, community utilities and properties shall be maintained by the owners of the property served by them and kept in good repair at all times. In order to insure continued good repair, it must be demonstrated to the department prior to plat recording that:

A. There is a workable organization to guarantee maintenance with a committee or group to administer the organizational functions; and

B. There is a means for assessing maintenance costs equitably to property owners served by the private streets, easements, community utilities and properties. (Ord. 13694 § 89, 1999).

Definitions, Ordinance 13694: See K.C.C. chapter 19A.04.

21A.14.330 Preliminary subdivision and short subdivision approval – covenants relating to keeping livestock in the RA zone. In the RA zone, all subdivisions and short subdivisions shall be recorded with a condition prohibiting any covenant that would preclude the keeping of horses or other large livestock. (Ord. 14045 § 43, 2001).

21A.14.350 Rural equestrian community trail preservation – purpose. The purposes of the rural equestrian community trail protection and improvement requirements set forth in this chapter are to promote the preservation of equestrian communities in King County as a valuable element of rural character and lifestyle. King County intends to accomplish these purposes in a flexible manner that provides incentives to and minimizes costs to private property owners, provides protection from liability for property owners with trails on their property, and does not reduce permitted residential densities in subdivisions and short subdivisions. (Ord. 14045 § 36, 2001).

21A.14.360 Rural equestrian community trails – general applicability. The county may accept the voluntary grant of an easement for a rural equestrian community trail consistent with K.C.C. 21A.14.350 through 21A.14.390 from any development when the development contains a rural equestrian community trail. The residents or tenants of the development shall be provided access to any such trail for use consistent with the function of the trail. The area of a trail provided under this section shall be counted as part of the site for purposes of density and floor area calculations. The application of this section shall not reduce the allowed density within a residential subdivision or short subdivision. The county may also accept the voluntary grant of an easement for a rural equestrian community trail consistent with K.C.C. 21A.14.350 through 21A.14.390 when there is no development proposed for the property. (Ord. 17841 § 35, 2014: Ord. 16267 § 75, 2008: Ord. 14259 § 9, 2001: Ord. 14045 § 37, 2001).

21A.14.365 Rural equestrian community trails - notification.

A. The department shall notify every applicant for a plat, short plat, boundary line adjustment, clearing and grading permit, conditional use permit, building permit for new construction or additions to existing structures, or zone reclassification in the RA, A or F zones on the opportunity to voluntarily grant an easement for a rural equestrian community trail in accordance with Ordinance 14259.

B. The department shall notify the department of natural resources and parks of every application for a plat, short plat, boundary line adjustment, clearing and grading permit, conditional use permit, building permit for new construction or additions to existing structures, or zone reclassification in the RA, A or F zones. (Ord. 16267 § 76, 2008: Ord. 14259 § 10, 2001).

21A.14.370 Rural equestrian community trails – authority. The department of natural resources and parks may accept a grant of easement for the preservation or relocation of a rural equestrian community trail as follows:

A. The department of natural resources and parks makes a determination in writing that:

1. The rural equestrian community trail is listed or mapped on an inventory of equestrian community trails maintained by the department of natural resources and parks. The department of natural resources and parks shall field verify the presence of a trail where an inventory indicates the general location of a trail that has not yet been field verified;

2. The rural equestrian community trail connects to a state, county or other trail open to the public;

3. The rural equestrian community trail, following a site inspection by the department of natural resources and parks, is reasonably fit for use as a rural equestrian community trail;

4. A rural equestrian community trail that traverses or impacts an environmentally sensitive area can be modified to meet code requirements for trails in critical areas; and

5. Permanent protection or relocation of a rural equestrian community trail can be accomplished without interference with allowed uses and development of the subject property, and the site can be developed without interference with the trail and allows for future owners of the property to access historically existing or public trails in the vicinity of the site [;] or

B. If the rural equestrian community trail is proposed to be granted as part of a mitigation package for a development proposal, the department of permitting and environmental review:

1. Determines that permanent protection or relocation of the rural equestrian community trail can be accomplished without interference with the proposed use and development of the subject property;

2. Determines that the site can be developed without interference with the trail and in a manner that allows future owners of the property to access historically existing or public trails in the vicinity that are linked to the subject site; and

3. Reports its findings in writing to the department of natural resources and parks. (Ord. 17841 § 36, 2014: Ord. 17420 § 101, 2012: Ord. 16267 § 77, 2008: Ord. 14259 § 11, 2001: Ord. 14045 § 38, 2001).

21A.14.380 Rural equestrian community trails – location and design standards. The following design standards apply to rural equestrian community trails:

A. An on-site rural equestrian community trail should be retained at its existing location unless that location impairs the use of the property as intended by the applicant. A rural equestrian community trail retained in the existing location shall not require any upgrades or improvements, except for maintenance required by this section. The trail may be relocated to a location within the street right-of-way or to another corridor separate from a street right-of-way, provided that whatever alternative is used preserves the same connections as the original trail to an existing public park or trail in the vicinity of the subject property. The preferred place for a relocated trail is out of the right-of-way or separated from the paved surface and road shoulder by a berm, ditch or other separation. Trails may only be relocated to a street right-of-way when meeting the standards in subsection E. of this section. A tax credit under the Public Benefit Rating System may only be given for trails relocated off the road right-of-way. The trail location shall be preserved by appropriate easements or dedications.

B. Corridors for trails located outside a street right-of-way shall be ten feet wide, or six feet wide if the trail will be located along a property line and additional corridor space can reasonably be expected to be preserved on the abutting property and the corridor is not encumbered by any structures adjacent to the corridor.

C. If permitted by K.C.C. chapter 21A.24, an existing or relocated rural equestrian community trail may be located in a designated critical area buffer.

D. Rural equestrian community trails that are not located within street rights-of-way, should be natural, visually and functionally unobtrusive, and as low-impact as possible.

E. Relocated or new rural equestrian community trails within public or private road rights-of-way shall be designed consistent with adopted King County Road Standards, KCRS Section 3.11, as supplemented by the following standards:

1. The trail shall be located to provide access to a local equestrian travel corridor through the project site and adjacent properties, as determined by the King County department of transportation in cooperation with the local equestrian community;

2. The preferred design is a trail separated from the paved roadway by a berm, ditch, tree cover or other natural obstacle; the center of the trail tread shall be at least eight feet of horizontal distance from the paved roadway edge;

3. When a separated trail cannot be provided, a soft-surfaced ninety-six inch-wide roadway shoulder path shall be installed on all roads other than local access streets, where a forty-eight inches shoulder path shall be sufficient;

4. All trails shall have an all-weather tread of thirty-six to forty-eight inches;

5. The roadway shall include appropriate surface treatment to reduce slippage at roadway and trail crossings; and

6. Appropriate signs shall be provided to indicate the location of street crossings for trails, with emphasis on arterials and subcollector street.

F. Relocated or new rural equestrian community trails not located in a right-of-way shall be designed to the King County Road Standards, KCRS Section 3.11.A.2. (Ord. 17841 § 37, 2014: Ord. 16267 § 78, 2008: Ord. 14259 § 12, 2001 Ord. 14045 § 39, 2001).

21A.14.390 Rural equestrian community trails - maintenance and operation.

A. Once a trail easement has been granted to the county as provided by this chapter, it shall remain free from structural obstructions or other permanent or temporary obstacles. A rural equestrian community trails [trail] shall be open to the public for recreational use by equestrians and pedestrians. Equestrian and pedestrian use does not include use by motor vehicles, bicycles, roller skates, skateboards or other mechanized modes of transportation. However, the department of natural resources and parks may authorize use by motor vehicles in limited circumstances, such as for maintenance, emergencies or trail crossings.

B. The trail easement shall set forth the responsibility for trail maintenance. Trails within dedicated street rights-of-way shall be maintained by the department of transportation or its successor agency. Trails within easements granted to King County shall be maintained by the department of natural resources and parks. The county may contract with a local user group or parks district for maintenance of the trail.

C. Trails established under this section are subject to the rules and enforcement measures for use of facilities for King County parks in K.C.C. chapter 7.12.

D. An easement governing the use and operation of a rural equestrian community trail being granted under Ordinance 14259 shall be granted by the property owner to the county. In preparing the easement, the department of natural resources

and parks is authorized to negotiate the terms of the easement on matters such as the allowed use of the easement, whether the easement includes indemnification requirements, the maintenance of the easement, the relocation of the easement, and whether the easement is permanent or for a term of years, depending on the value of the property as a rural equestrian community trail. The easement shall be consistent with Ordinance 14259. (Ord. 14259 § 13, 2001: Ord. 14045 § 40, 2001).

21A.14.410 Rural equestrian community trails - annual report. The executive shall report to the council annually by July 31, in the form of an electronic and a paper copy filed with the clerk of the council, who shall distribute electronic copies to all councilmembers, on the implementation of the rural equestrian community trail incentives and regulations adopted by Ordinance 14259 and for the implementation of the active trail linkage provisions of K.C.C. 20.36.100.A.5, starting in 2012.

A. For the rural equestrian community trail incentives and regulations, the report shall include the following:

1. Miles of community trail and acreage accepted in the equestrian-pedestrian-bicycle trail linkage category of the public benefit rating system program;
2. Status of field verification and mapping of community trails;
3. Regulatory issues and proposed amendments;
4. Implementation issues;
5. Response from equestrian user groups, landowners and citizens;
6. Status of agreements with other jurisdictions or private individuals or groups concerning operations and maintenance;
7. A map of verified trails and non-verified trails;
8. Costs associated with trail maintenance and improvements; and
9. Other relevant information pertaining to the incentive and regulatory program.

B. For the active trail linkage provisions of K.C.C. 20.36.100.A.5, the report shall include the following:

1. Numbers of trail linkages accepted into the active trail linkage category of the public benefit rating system program;
2. Estimates of use volumes for active trail linkages;
3. Implementation issues;
4. A description of efforts with a trail advocacy group in identifying potential trail linkages, including numbers of linkages identified;
5. General description of the extent to which the linkages have impacted the utility of the system for recreation, commuting, transportation and public health; and
6. Costs associated with trail maintenance and improvements. (Ord. 16942 § 4, 2010: Ord. 14259 § 14, 2001).

21A.16 DEVELOPMENT STANDARDS - LANDSCAPING AND WATER USE

Sections:

21A.16.010 Purpose.
21A.16.020 Application.
21A.16.030 Land use grouping.
21A.16.040 Landscaping - screen types and description.
21A.16.050 Landscaping - street frontages.
21A.16.060 Landscaping - interior lot lines.
21A.16.070 Landscaping - surface parking areas.
21A.16.080 Landscaping - adjacent to freeway rights-of-way.
21A.16.085 Landscaping - general standards for all landscape areas.

21A.16.090 Landscaping - additional standards for required landscape areas.
21A.16.100 Landscaping - alternative options.
21A.16.115 Landscaping - plan design, design review, and installation.
21A.16.180 Maintenance.
21A.16.190 Financial guarantees.
21A.16.330 Water use - Irrigation efficiency goals and system design standards.
21A.16.340 Water use - Irrigation system design, design review and audit at installation.
21A.16.350 Water use - Irrigation design plan contents.
21A.16.370 Water use - Irrigation system maintenance.

21A.16.010 Purpose. The purpose of this chapter is to preserve the aesthetic character of communities; to improve the aesthetic quality of the built environment; to promote retention and protection of existing vegetation; to promote water efficiency; to promote native wildlife; to reduce the impacts of development on drainage systems and natural habitats; and to increase privacy for rural area and residential zones by:

A. Providing visual relief from large expanses of parking areas and reduction of perceived building scale;

B. Providing physical separation between rural area or residential zones and nonresidential zones;

C. Providing visual screens and barriers as a transition between differing land uses;

D. Retaining existing vegetation and significant trees by incorporating them into the site design;

E. Providing increased areas of permeable surfaces to allow for:

1. Infiltration of surface water into groundwater resources;
2. Reduction in the quantity of storm water discharge; and
3. Improvement in the quality of storm water discharge;

F. Encouraging the use of native plant species by their retention or use in the landscape design;

G. Requiring water use efficiency through water budgeting and efficient irrigation design standards;

H. Encouraging the use of a diversity of plant species that promote native wildlife habitat. (Ord. 17539 § 39, 2013: Ord. 11210 § 1, 1994: Ord. 10870 § 386, 1993).

21A.16.020 Application. Except for communication facilities regulated pursuant to K.C.C. 21A.26, all new development listed in K.C.C. 21A.16.030 shall be subject to the landscaping provisions of this chapter, provided that specific landscaping and tree retention provisions for uses established through a conditional use permit, a special use permit, or an urban planned development application shall be determined during the applicable review process. (Ord. 11210 § 2, 1994: Ord. 10870 § 387, 1993).

21A.16.030 Land use grouping. To facilitate the application of this chapter, the land uses of K.C.C. chapter 21A.08 have been grouped in the following manner:

A. Residential development refers to those uses listed in K.C.C. 21A.08.030, except those uses listed under Accessory uses, and:

1. Attached/group residences refers to:

a. townhouses, except as provided in subsection A.2.a. of this section;

b. apartments and detached dwelling units developed on common property at a density of twelve or more units per acre;

c. senior citizen assisted housing;

d. temporary lodging;

e. group residences other than Type I community residential facilities;

f. mobile home parks; and

2. Single-family development refers to:

a. residential subdivisions and short subdivisions, including attached and detached dwelling units on individually platted or short platted lots;

b. any detached dwelling units located on a lot including cottage housing units; and

c. Type I community residential facilities;

B. Commercial development refers to those uses in:

1. K.C.C. 21A.08.040 as amusement/entertainment uses, except golf facilities;

2. K.C.C. 21A.08.050 except recycling centers, health and educational services, daycare I, churches, synagogues and temples, and miscellaneous repair as allowed in the A and RA zones; and

3. K.C.C. 21A.08.070, except forest product sales and agricultural product sales as allowed in the A, F and RA zones and building, hardware and garden materials as allowed in the A zones;

C. Industrial development refers to those uses listed in:

1. K.C.C. 21A.08.050 as recycling center;

2. K.C.C. 21A.08.060, except government services and farm product warehousing, refrigeration and storage as allowed in the A zones;

3. K.C.C. 21A.08.080, except food and kindred products as allowed in the A and F zones; and

4. K.C.C. 21A.08.090 as mineral extraction and processing;

D. Institutional development refers to those uses listed in:

1. K.C.C. 21A.08.040 as cultural uses, except arboretums;

2. K.C.C. 21A.08.050 as churches, synagogues and temples, health services and education services except specialized instruction schools permitted as an accessory use; and

3. K.C.C. 21A.08.060 as government services;

E. Utility development refers to those uses listed in K.C.C. 21A.08.060 as utility facilities; and

F. Uses in K.C.C. chapter 21A.08 that are not listed in subsections A. through E. of this section shall not be subject to landscaping and tree retention requirements except as specified in any applicable review of a conditional use or special use permits. (15032 § 21, 2004: Ord. 14045 § 44, 2001: Ord. 11621 § 54, 1994: 11354 § 1, 1994: Ord. 11210 § 3, 1994: Ord. 10870 § 388, 1993).

21A.16.040 Landscaping - screen types and description. The three types of landscaping screens are described and applied as follows:

A. Type I landscaping screen:

1. Type I landscaping is a "full screen" that functions as a visual barrier. This landscaping is typically found adjacent to freeways and between residential and non-residential areas.

2. Type I landscaping shall minimally consist of:

a. A mix of primarily evergreen trees and shrubs generally interspersed throughout the landscape strip and spaced to form a continuous screen;

b. Between 70 and 90 percent evergreen trees;

c. Trees provided at the rate of one per 10 linear feet of landscape strip and spaced no more than 30 feet apart on center;

d. Evergreen shrubs provided at the rate of one per linear four feet of landscape strip and spaced no more than 8 feet apart on center; and

e. Ground cover pursuant to K.C.C. 21A.16.090;

B. Type II landscaping screen:

1. Type II landscaping is a "filtered screen" that functions as a visual separator. This landscaping is typically found between commercial and industrial uses; between differing types of residential development; and to screen industrial uses from the street;

2. Type II landscaping shall minimally consist of:

a. A mix of evergreen and deciduous trees and shrubs generally interspersed throughout the landscape strip spaced to create a filtered screen;

b. At least 50 percent deciduous trees and at least 30 percent evergreen trees;

c. Trees provided at the rate of one per 20 linear feet of landscape strip and spaced no more than 30 feet apart on center;

d. Shrubs provided at the rate of one per four linear feet of landscape strip and spaced no more than eight feet apart on center; and

e. Ground cover pursuant to K.C.C. 21A.16.090;

C. Type III landscaping screen:

1. Type III landscaping is a "see-through screen" that functions as a partial visual separator to soften the appearance of parking areas and building elevations. This landscaping is typically found along street frontage or between apartment developments;

2. Type III landscaping shall minimally consist of:

a. A mix of evergreen and deciduous trees generally interspersed throughout the landscape strip and spaced to create a continuous canopy;

b. At least 70 percent deciduous trees;

c. Trees provided at the rate of one per linear 25 feet of landscape strip and spaced no more than 30 feet apart on center;

d. Shrubs provided at the rate of one per four linear feet of landscape strip and spaced no more than 8 feet apart on center; and

e. Ground cover pursuant to K.C.C. 21A.16.090. (Ord. 11621 § 55, 1994: Ord. 11210 § 4, 1994: Ord. 10870 § 389, 1993).

21A.16.050 Landscaping - street frontages. The average width of perimeter landscaping along street frontages shall be provided as follows:

A. Twenty feet of Type II landscaping shall be provided for an institutional use, excluding playgrounds and playfields;

B. Ten feet of Type II landscaping shall be provided for an industrial development;

C. Ten feet of Type II landscaping shall be provided for an above-ground utility facilities development, excluding distribution and transmission corridors, located outside a public right-of-way;

D. Ten feet of Type III landscaping shall be provided for a commercial or attached/group residence development; and

E. For single family subdivisions and short subdivisions in the urban growth area:

1. Trees shall be planted at the rate of one tree for every forty feet of frontage along all public streets;

2. The trees shall be:

a. Located within the street right-of-way if permitted by the custodial state or local agency;

b. No more than twenty feet from the street right-of-way line if located within a lot;

c. Maintained by the adjacent landowner unless part of a county maintenance program; and

d. A species approved by the county if located within the street right-of way and compatible with overhead utility lines.

3. The trees may be spaced at irregular intervals to accommodate sight distance requirements for driveways and intersections. (Ord. 16267 § 33, 2008: Ord. 14045 § 45, 2001: Ord. 11621 § 56, 1994: Ord. 11210 § 5, 1994: Ord. 10870 § 390, 1993).

21A.16.060 Landscaping - interior lot lines. The average width of perimeter landscaping along interior lot lines shall be provided as follows:

A. Twenty feet of Type I landscaping shall be included in a commercial or industrial development along any portion adjacent to a residential development;

B. Five feet of Type II landscaping shall be included in an attached/group residence development, except that along portions of the development adjacent to property developed with single detached residences or vacant property that is zoned RA, UR or R(1-8), the requirement shall be ten feet of Type II landscaping;

C. Ten feet of Type II landscaping shall be included in an industrial development along any portion adjacent to a commercial or institutional development; and

D. Ten feet of Type II landscaping shall be included in an institutional use, excluding [of playgrounds and playfields, or an above-ground utility facility development, excluding]* distribution or transmission corridors, when located outside a public right-of-way. (Ord. 11939 § 1, 1995: Ord. 11210 § 6, 1994: Ord. 10870 § 391, 1993).

***Reviser's Note: Language not designated by underlining in Ordinance 11939. See K.C.C. 1.24.075.**

21A.16.070 Landscaping - surface parking areas. Parking area landscaping shall be provided within surface parking areas with ten or more parking stalls for the purpose of improving air quality, reducing surface water runoff, providing shade and diminishing the visual impacts of large paved areas as follows:

A. Residential developments with common parking areas shall provide planting areas at the rate of twenty square feet per parking stall;

B. Commercial, industrial or institutional developments shall provide landscaping at a rate of:

1. Twenty square feet per parking stall if ten to thirty parking stalls are provided; and

2. Twenty-five square feet per parking stall if thirty-one or more parking stalls are provided;

C. Trees shall be provided and distributed throughout the parking area at a rate of:

1. One tree for every three parking stalls for a commercial or industrial development; and

2. One tree for every five parking stalls for residential or institutional development;

D. The maximum distance between any parking stall and landscaping shall be no more than one hundred feet;

E. Permanent curbs or structural barriers shall be provided to protect the plantings from vehicle overhang;

F. Landscaping around the perimeter of a site that is in addition to the perimeter landscaping required by K.C.C. 21A.16.050 may count toward ten percent of the required surface parking area landscaping if it is adjacent to the parking area; and

G. Parking area landscaping shall consist of:

1. Canopy-type deciduous trees, evergreen trees, evergreen shrubs and ground covers planted in islands or strips;

2. Shrubs that do not exceed a maintained height of forty-two inches;

3. Plantings contained in planting islands or strips having an area of at least one hundred square feet and with a narrow dimension of no less than five feet;

4. Ground cover in accordance with K.C.C. 21A.16.090; and

5. At least seventy percent of trees are deciduous. (Ord. 14045 § 46, 2001: Ord. 11210 § 7, 1994: Ord. 10870 § 392, 1993).

21A.16.080 Landscaping - adjacent to freeway rights-of-way.

A. All residential developments shall provide a minimum average width of 20 feet of Type I landscaping adjacent to freeway rights-of-way.

B. All other developments shall provide a minimum average width of 20 feet of Type III landscaping adjacent to freeway rights-of-way. (Ord. 11210 § 8, 1994: Ord. 10870 § 393, 1993).

21A.16.085 Landscaping - general standards for all landscape areas. All new landscape areas proposed for a development shall be subject to the following provisions:

A. Berms shall not exceed a slope of two horizontal feet to one vertical foot (2:1).

B. All new turf areas, except all-weather, sand-based athletic fields shall:

1. Be augmented with a two-inch layer of organic material cultivated a minimum of six inches deep, or

2. Have an organic content of five percent or more to a depth of six inches as shown in a soil sample analysis. The soil analysis shall include:

a. Determination of soil texture, indicating percentage of organic matter,

b. An approximated soil infiltration rate (either measured or derived from soil/texture /infiltration rate tables). A range of infiltration rates shall be noted where appropriate, and

c. Measure Ph value.

C. Except as specifically outlined for turf areas in subsection B, the organic content of soils in any landscape area shall be as necessary to provide adequate nutrient and moisture-retention levels for the establishment of plantings.

D. Landscape areas, except turf or areas of established groundcover, shall be covered with at least two inches of mulch to minimize evaporation.

E. Plants having similar water use characteristics shall be grouped together in distinct hydrozones.

F. Plant selection shall consider adaptability to climatic, geologic, and topographical conditions of the site. Preservation of existing vegetation is encouraged. (Ord. 11210 § 9, 1994).

21A.16.090 Landscaping - additional standards for required landscape areas. In addition to the general standards of K.C.C. 21A.16.085, landscape areas required pursuant to K.C.C. 21A.16.050 through .080 shall conform to the following standards:

A. All plants shall conform to American Association of Nurserymen (AAN) grades and standards as published in the "American Standard for Nursery Stock"

manual, provided that existing healthy vegetation used to augment new plantings shall not be required to meet the standards of this manual;

B. Single-stemmed trees required pursuant to this chapter shall at the time of planting conform to the following standards:

1. In parking area landscaping and in street rights-of-way:

a. Deciduous trees shall have a minimum caliper of 1.75 inches and a height of 10 feet, and

b. Coniferous and broadleaf evergreens shall be at least five feet in height;

2. In all other required landscape areas:

a. Deciduous trees shall have a minimum caliper of 1.5 inches and a height of ten feet, and

b. Coniferous and broadleaf evergreen trees shall be at least five feet in height.

C. Multiple-stemmed trees shall be permitted as an option to single-stemmed trees provided that such multiple-stemmed trees are:

1. At least six feet in height, and

2. Not allowed within street rights-of-way;

D. When the width of any landscape strip is 20 feet or greater, the required trees shall be staggered in two or more rows;

E. Shrubs shall be:

1. At least an AAN container class #2 size at time of planting in Type II, III and parking area landscaping,

2. At least 24 inches in height at the time of planting for Type I landscaping, and

3. Maintained at a height not exceeding 42 inches when located in Type III or parking area landscaping;

F. Ground covers shall be planted and spaced to result in total coverage of the majority of the required landscape area within three years.

G. All fences shall be placed on the inward side of any required perimeter landscaping along the street frontage.

H. Required street landscaping may be placed within King County street rights-of-way subject to the County Road Design Standards, provided adequate space is maintained along the street line to replant the required landscaping should subsequent street improvements require the removal of landscaping within the rights-of-way;

I. Required street landscaping may be placed within Washington State rights-of-way subject to permission of the Washington State Department of Transportation.

J. New landscape material provided within areas of undisturbed vegetation or within the protected area of significant trees shall give preference to utilizing indigenous plant species. (Ord. 11621 § 57, 1994: 11210 § 10, 1994: Ord. 10870 § 394, 1993).

21A.16.100 Landscaping - alternative options. The following alternative landscape options may be allowed, subject to county approval, only if they accomplish equal or better levels of screening, or when existing conditions on or adjacent to the site, such as significant topographic differences, vegetation, structures or utilities would render application of this chapter ineffective or result in scenic view obstruction:

A. The amount of required landscape area may be reduced to ensure that the total area for required landscaping, and/or the area remaining undisturbed for the purpose of wildlife habitat or corridors does not exceed 15 percent of the net developable area of the site. For the purpose of this subsection, the net developable area of the site shall not include areas deemed unbuildable due to their location within sensitive areas and any associated buffers.

B. The average width of the perimeter landscape strip may be reduced up to 25 percent along any portion where:

1. Berms at least three feet in height or architectural barriers at least six feet in height are incorporated into the landscape design; or

2. The landscape materials are incorporated elsewhere on-site;

C. In pedestrian district overlays, street perimeter landscaping may be waived provided a site plan, consistent with the applicable adopted area zoning document, is approved that provides street trees and other pedestrian-related amenities;

D. Landscaping standards for uses located in a rural town or rural business centers designated by the comprehensive plan may be waived or modified by the director if deemed necessary to maintain the historic character of the area. Where a local or subarea plan with design guidelines has been adopted, the director shall base the landscaping modifications on the policies and guidelines of such plan.

E. When an existing structure precludes installation of the total amount of required site perimeter landscaping, such landscaping material shall be incorporated on another portion of the site.

F. Single-stemmed deciduous tree species that cannot generally be planted and established in larger sizes may have a caliper of less than 1.5 inches; and

G. The number of trees and shrubs to be provided in required perimeter and parking area landscaping may be reduced up to 25 percent when a development uses landscaping materials consisting of species typically associated with the Puget Sound Basin in the following proportions:

1. Seventy-five percent of groundcover and shrubs, and

2. Fifty percent of trees.

H. The department shall, pursuant to K.C.C. 2.98, develop and maintain an advisory listing of trees recommended for new plantings. Such list shall describe their general characteristics and suitability, and provide guidelines for their inclusion within required landscape areas. (Ord. 11621 § 58, 1994: Ord. 11255 § 3, 1994: Ord. 11210 § 11, 1994: Ord. 10870 § 395, 1993).

21A.16.115 Landscaping - plan design, design review, and installation.

A. The landscape plan submitted to the department shall be drawn on the same base map as the development plans and shall identify the following:

1. Total landscape area and separate hydrozones;
2. Landscape materials botanical/common name and applicable size;
3. Property lines;
4. Impervious surfaces;
5. Natural or man-made water features or bodies;
6. Existing or proposed structures, fences, and retaining walls;
7. Natural features or vegetation left in natural state; and
8. Designated recreational open space areas.

B. The proposed landscape plan shall be certified by a Washington state licensed landscape architect.

C. An affidavit signed by an individual specified in subsection B. [of this section], certifying that the landscaping has been installed in compliance with the approved landscaping plan, shall be submitted to the department within thirty days of installation completion, unless the installed landscaping has been inspected and accepted by the department.

D. The required landscaping shall be installed no later than three months after issuance of a certificate of occupancy for the project or project phase. However, the time limit for compliance may be extended to allow installation of such required landscaping during the next appropriate planting season. A financial guarantee shall be

required before issuance of the certificate of occupancy, if landscaping is not installed and inspected before occupancy. (Ord. 17539 § 40, 2013: Ord. 11939 § 2, 1995: Ord. 11210 § 12, 1994).

21A.16.180 Maintenance.

A. All landscaping shall be maintained for the life of the project.

B. All landscape materials shall be pruned and trimmed as necessary to maintain a healthy growing condition or to prevent primary limb failure;

C. With the exception of dead, diseased or damaged trees specifically retained to provide wildlife habitat; other dead, diseased, damaged or stolen plantings shall be replaced within three months or during the next planting season if the loss does not occur in a planting season; and

D. Landscape areas shall be kept free of trash. (Ord. 11255 § 2, 1994: Ord. 10870 § 403, 1993).

21A.16.190 Financial guarantees. Financial guarantees shall be required consistent with the provisions of Title 27A. This time period may be extended to one year by the director, if necessary to cover a planting and growing season. (Ord. 12020 § 52, 1995: Ord. 11210 § 13, 1994: Ord. 10870 § 404, 1993).

21A.16.330 Water use - Irrigation efficiency goals and system design standards. For purposes of this section, irrigation shall include any means of applying water to landscaped areas. All irrigation is at the applicant's option. Manually applied irrigation methods shall comply with subsections A. through C. Irrigation applied through installed irrigation systems shall comply with subsections A. through D.:

A. The applicant shall provide the following information:

1. Right-of-way use permit if required;
2. Identity of person or entity responsible for maintenance of the irrigation; and
3. Location of shut-off valves.

B. Irrigation water shall be applied with goals of avoiding runoff, low head drainage, overspray, or other similar conditions where water flows onto adjacent property, nonirrigated areas, and impervious surfaces by:

1. Considering soil type and infiltration rates,
2. Using proper irrigation equipment and schedules, including features such as repeat cycles, to closely match application rates with infiltration rates, and
3. Considering special problems posed by irrigation on slopes and in median strips.

C. All irrigation water outlets, except those using alternative water sources, shall be downstream of the meter used to measure irrigation water use.

D. Irrigation systems shall be subject to the following additional provisions:

1. Systems shall not be located on any:
   a. turfgrass slopes exceeding a slope of three horizontal feet to one vertical foot (3:1), and
   b. turfgrass portions of median strips.
2. Systems in landscape strips less than five feet in width shall be designed to ensure that overspray and/or runoff does not occur by use of system design options such as low volume emitters.
3. Systems shall be designed to be consistent with the requirements of the hydrozone in which they are located.
4. Systems shall be designed with the minimum average irrigation efficiency of 0.625.

5. The use of automatic shutoff or override capabilities using rain shutoffs or moisture sensors is encouraged.

6. Systems shall utilize a master control valve connected to an automatic controller.

7. Systems shall make provisions for winterization either by providing:

a. manual drains (automatic drain valves are not permitted at all low points), or

b. means to blow out lines with pressurized air.

8. Separate valves shall be used to irrigate plants with differing water needs.

9. Sprinkler heads with consistent application rates shall be selected for proper area coverage, operating pressure, and adjustment capability. (Ord. 17191 § 38, 2011: Ord. 11210 § 17, 1994).

21A.16.340 Water use - Irrigation system design, design review and audit at installation.

A. Irrigation plan design shall be certified by an Irrigation Association (IA)-certified designer or a registered landscape architect or professional engineer with irrigation design experience.

B. The irrigation system must be audited and accepted at installation by an IA-certified irrigation auditor. (Ord. 11210 § 18, 1994).

21A.16.350 Water use - Irrigation design plan contents. Proposed irrigation system design plans shall be drawn on the same base project map as the landscape plan and shall identify:

A. Location and size of any proposed separate water meters for the landscape;

B. Location, type, and size of all components of the irrigation system;

C. Static water pressure at the point of connection to the water supply; and

D. Flow rate (gallons per minute), application rates (inches per hour), and design operating pressure (PSI) for each station. (Ord. 11210 § 19, 1994).

21A.16.370 Water use - Irrigation system maintenance. Irrigation systems shall be maintained and inspected periodically to assure proper functioning. Replacement of components shall be of originally specified parts or materials, or their equivalents. (Ord. 11210 § 21, 1994).

21A.18 DEVELOPMENT STANDARDS - PARKING AND CIRCULATION

Sections:

21A.18.010 Purpose.
21A.18.020 Authority and application.
21A.18.030 Computation of required off-street parking spaces.
21A.18.040 Shared parking requirements.
21A.18.050 Exceptions for community residential facilities (CRF) and senior citizen assisted housing.
21A.18.060 Parking for the disabled.
21A.18.070 Loading space requirements.
21A.18.080 Stacking spaces for drive-through facilities.
21A.18.090 Transit and rideshare provisions.
21A.18.100 Pedestrian and bicycle circulation and access.
21A.18.110 Off-street parking plan design standards.
21A.18.120 Off-street parking construction standards.

21A.18.130 Compact car allowance requirements.
21A.18.140 Internal circulation road standards.

21A.18.010 Purpose. The purpose of this chapter is to provide adequate parking for all uses allowed in this title; to reduce demand for parking by encouraging alternative means of transportation including public transit, rideshare and bicycles; and to increase pedestrian mobility in urban areas by:

A. Setting minimum off street parking standards for different land uses that assure safe, convenient and adequately sized parking facilities within activity centers;

B. Providing incentives to rideshare through preferred parking arrangements;

C. Providing for parking and storage of bicycles;

D. Providing safe direct pedestrian access from public rights-of-way to structures and between developments; and

E. Requiring uses which attract large numbers of employees or customers to provide transit stops. (Ord. 10870 § 405, 1993).

21A.18.020 Authority and application.

A. Before an occupancy permit may be granted for any new or enlarged building or for a change of use in any existing building, the use shall be required to meet the requirements of this chapter. In addition, K.C.C. 21A.18.110 I. and J. establish residential parking limitations applicable to existing, as well as new, residential uses.

B. If this chapter does not specify a parking requirement for a land use, the director shall establish the minimum requirement based on a study of anticipated parking demand. Transportation demand management actions taken at the site shall be considered in determining anticipated demand. If the site is located in an activity center or community business center, the minimum requirement shall be set at a level less than the anticipated demand, but at no less than seventy-five percent of the anticipated demand. In the study, the applicant shall provide sufficient information to demonstrate that the parking demand for a specific land use will be satisfied. Parking studies shall be prepared by a professional engineer with expertise in traffic and parking analyses, or an equally qualified individual as authorized by the director.

C. If the required amount of off-street parking has been proposed to be provided off-site, the applicant shall provide written contracts with affected landowners showing that required off-street parking shall be provided in a manner consistent with this chapter. The contracts shall be reviewed by the director for compliance with this chapter, and if approved, the contracts shall be recorded with the records and licensing services division as a deed restriction on the title to all applicable properties. These deed restrictions may not be revoked or modified without authorization by the director.

D. Upon request from the proponent of any use subject to the this chapter located in a rural town, rural neighborhood center, any commercial zone located in a rural area or natural resource production district designated by the Comprehensive Plan, or any agricultural product production, processing or sales use allowed in the A or F zones the director may waive or modify this chapter in order to protect or enhance the historic character of the area, to reduce the need for pavement or other impervious surfaces, to recognize the seasonal nature of any such activity or to minimize the conversion of agriculturally productive soils. Where a neighborhood or subarea plan with design guidelines that includes the subject property has been adopted, the director shall base allowable waivers or modifications on the policies and guidelines in such a plan. (Ord. 15971 § 96, 2007: Ord. 15032 § 22, 2004: Ord. 14309 § 9, 2002: Ord. 11621 § 59, 1994: Ord. 10870 § 406, 1993).

21A.18.030 Computation of required off-street parking spaces.

A. Except as modified in K.C.C. 21A.18.070.B-D, off-street parking areas shall contain at a minimum the number of parking spaces as stipulated in the following table. Off-street parking ratios expressed as number of spaces per square feet means the usable or net square footage of floor area, exclusive of non-public areas. Non-public areas include but are not limited to building maintenance areas, storage areas, closets or restrooms. If the formula for determining the number of off-street parking spaces results in a fraction, the number of off-street parking spaces shall be rounded to the nearest whole number with fractions of .50 or greater rounding up and fractions below .50 rounding down.

LAND USE	**MINIMUM PARKING SPACES REQUIRED**
RESIDENTIAL (K.C.C. 21A.08.030.A):	
Single detached/Townhouse	2.0 per dwelling unit
Apartment:	
Studio units	1.2 per dwelling unit
One bedroom units	1.5 per dwelling unit
Two bedroom units	1.7 per dwelling unit
Three bedroom units or larger	2.0 per dwelling unit
Mobile home park	2.0 per dwelling unit
Senior citizen assisted	1 per 2 dwelling or sleeping units
Community residential facilities	1 per two bedrooms
Dormitory, including religious	1 per two bedrooms
Hotel/Motel including organizational hotel/lodging	1 per bedroom
Bed and breakfast guesthouse	1 per guest room, plus 2 per facility
RECREATION/CULTURAL (K.C.C. 21A.08.040.A):	
Recreation/culture uses:	1 per 300 square feet
Exceptions:	
Bowling center	5 per lane
Golf course	3 per hole, plus 1 per 300 square feet of club house facilities
Tennis Club	4 per tennis court plus 1 per 300 square feet of clubhouse facility
Golf driving range	1 per tee
Park/playfield/paintball	(director)
Theater	1 per 3 fixed seats
Conference center	1 per 3 fixed seats, plus 1 per 50 square feet used for assembly purposes without fixed seats, or 1 per bedroom, whichever results in the greater number of spaces.
LAND USE	**MINIMUM PARKING SPACES REQUIRED**
GENERAL SERVICES (K.C.C. 21A.08.050.A):	
General services uses:	1 per 300 square feet

Exceptions:	
Funeral home/Crematory	1 per 50 square feet of chapel area
Daycare I	2 per facility
Daycare II	2 per facility, plus 1 space for each 20 children
Churches, synagogue, temple	1 per 5 fixed seats, plus 1 per 50 square feet of gross floor area without fixed seats used for assembly purposes
Outpatient and Veterinary clinic offices	1 per 300 square feet of office, labs and examination rooms
Nursing and personal care Facilities	1 per 4 beds
Hospital	1 per bed
Elementary schools	1 per classroom, plus 1 per 50 students
Secondary schools	
Middle/junior high schools	1 per classroom, plus 1 per 50 students
High schools	1 per classroom, plus 1 per 10 students
High schools with stadiums	greater of 1 per classroom plus 1 per 10 students, or 1 per 3 fixed seats in stadium
Vocational schools	1 per classroom, plus 1 per five students
Specialized instruction Schools	1 per classroom, plus 1 per two students
Artist Studios	.9 per 1,000 square feet of area used for studios
GOVERNMENT/BUSINESS SERVICES (K.C.C. 21A.08.060.A):	
Government/business services uses:	1 per 300 square feet
Exceptions:	
Public agency yard	1 per 300 square feet of offices, plus .9 per 1,000 square feet of indoor storage or repair areas
Public agency archives	.9 per 1000 square feet of storage area, plus 1 per 50 square feet of waiting/reviewing areas
Courts	3 per courtroom, plus 1 per 50 square feet of fixed seat or assembly areas
Police facility	(director)
Fire facility	(director)
Construction and trade	1 per 300 square feet of office, plus 1 per 3,000 square feet of storage area

Warehousing and storage	1 per 300 square feet of office, plus .9 per 1,000 square feet of storage area
Self-service storage	1 per 3,500 square feet of storage area, plus 2 for any resident director's unit
Outdoor advertising services	1 per 300 square feet of office, plus .9 per 1,000 square feet of storage area
Heavy equipment repair	1 per 300 square feet of office, plus .9 per 1,000 square feet of indoor repair areas
Office	1 per 300 square feet
LAND USE	**MINIMUM PARKING SPACES REQUIRED**
RETAIL/WHOLESALE (K.C.C. 21A.08.070.A):	
Retail trade uses:	1 per 300 square feet
Exceptions:	
Food stores, less than 15,000 square feet	3 plus 1 per 350 square feet
Gasoline service stations w/o grocery	3 per facility, plus 1 per service bay
Gasoline service stations w/grocery, no service bays	1 per facility, plus 1 per 300 square feet of store
Restaurants	1 per 75 square feet in dining or lounge areas
Wholesale trade uses	.9 per 1000 square feet
Retail and wholesale trade mixed use	1 per 300 square feet
MANUFACTURING (K.C.C. 21A.08.080.A):	
Manufacturing uses	.9 per 1,000 square feet
Winery/Brewery	.9 per 1,000 square feet, plus 1 per 50 square feet of tasting area
RESOURCES (K.C.C. 21A.08.090.A):	
Resource uses	(director)
REGIONAL (K.C.C. 21A.08.100.A):	
Regional uses	(director)

B. An applicant may request a modification of the minimum required number of parking spaces by providing that parking demand can be met with a reduced parking requirement. In such cases, the director may approve a reduction of up to fifty percent of the minimum required number of spaces.

C. When the county has received a shell building permit application, off-street parking requirements shall be based on the possible tenant improvements or uses

authorized by the zone designation and compatible with the limitations of the shell permit. When the range of possible uses result in different parking requirements, the director will establish the amount of parking based on a likely range of uses.

D. Where other provisions of this code stipulate maximum parking allowed or reduced minimum parking requirements, those provisions shall apply.

E. In any development required to provide six or more parking spaces, bicycle parking shall be provided. Bicycle parking shall be bike rack or locker-type parking facilities unless otherwise specified.

1. Off-street parking areas shall contain at least one bicycle parking space for every twelve spaces required for motor vehicles except as follows:

a. The director may reduce bike rack parking facilities for patrons when it is demonstrated that bicycle activity will not occur at that location.

b. The director may require additional spaces when it is determined that the use or its location will generate a high volume of bicycle activity. Such a determination will include but not be limited to the following uses:

(1) Park/playfield,
(2) Marina,
(3) Library/museum/arboretum,
(4) Elementary/secondary school,
(5) Sports club, or
(6) Retail business (when located along a developed bicycle trail or designated bicycle route).

2. Bicycle facilities for patrons shall be located within 100 feet of the building entrance and shall be designed to allow either a bicycle frame or wheels to be locked to a structure attached to the pavement.

3. All bicycle parking and storage shall be located in safe, visible areas that do not impede pedestrian or vehicle traffic flow, and shall be well lit for nighttime use.

4. When more than ten people are employed on site, enclosed locker-type parking facilities for employees shall be provided. The director shall allocate the required number of parking spaces between bike rack parking and enclosed locker-type parking facilities.

5. One indoor bicycle storage space shall be provided for every two dwelling units in townhouse and apartment residential uses, unless individual garages are provided for every unit. The director may reduce the number of bike rack parking spaces if indoor storage facilities are available to all residents. (Ord. 16267 § 34, 2008: Ord. 13022 § 22, 1998: Ord. 11978 § 14, 1995: Ord. 11157 § 18, 1993: Ord. 10870 § 407, 1993).

21A.18.040 Shared parking requirements. The amount of off-street parking required by K.C.C. 21A.18.030 may be reduced by an amount determined by the director when shared parking facilities for two or more uses are proposed, provided:

A. The total parking area exceeds 5,000 square feet;

B. The parking facilities are designed and developed as a single on-site common parking facility, or as a system of on-site and off-site facilities, if all facilities are connected with improved pedestrian facilities and no building or use involved is more than eight hundred feet from the most remote shared facility;

C. The amount of the reduction shall not exceed ten percent for each use, unless:

1. The normal hours of operation for each use are separated by at least one hour; or

2. A parking demand study is prepared by a professional traffic engineer and submitted by the applicant documenting that the hours of actual parking demand for the

proposed uses will not conflict and those uses will be served by adequate parking if shared parking reductions are authorized;

3. The director will determine the amount of reduction subject to paragraph D of this section.

D. The total number of parking spaces in the common parking facility is not less than the minimum required spaces for any single use;

E. A covenant or other contract for shared parking between the cooperating property owners is approved by the director. This covenant or contract must be recorded with the records and licensing services division as a deed restriction on both properties and cannot be modified or revoked without the consent of the director; and

F. If any requirements for shared parking are violated, the affected property owners must provide a remedy satisfactory to the director or provide the full amount of required off-street parking for each use, in accordance with the requirements of this chapter, unless a satisfactory alternative remedy is approved by the director. (Ord. 15971 § 97, 2007: Ord. 11621 § 60, 1994: Ord. 10870 § 408, 1993).

21A.18.050 Exceptions for community residential facilities (CRF) and senior citizen assisted housing.

A. The minimum requirement of one off-street parking space per two bedrooms for CRF's and one off-street parking space per two senior citizen assisted housing units may be reduced by up to 50 percent, as determined by the director based on the following considerations:

1. Availability of private, convenient transportation services to meet the needs of the CRF residents;
2. Accessibility to and frequency of public transportation; and
3. Pedestrian access to health, medical, and shopping facilities;

B. If a CRF facility or senior citizen assisted housing is no longer used for such purposes, additional off-street parking spaces shall be required in compliance with this chapter prior to the issuance of a new certificate of occupancy. (Ord. 10870 § 409, 1993).

21A.18.060 Parking for the disabled. Off-street parking and access for physically disabled persons shall be provided in accordance with of the regulations adopted pursuant to Chapter 19.27 RCW, State Building Code, and Chapter 70.92 RCW, Public Buildings-Provisions for Aged and Disabled. (Ord. 13022 § 23, 1998: Ord.11621 § 61, 1994: Ord. 10870 § 410, 1993).

21A.18.070 Loading space requirements.

A. Every non-residential building engaged in retail, wholesale, manufacturing or storage activities, excluding self-service storage facilities, shall provide loading spaces in accordance with the standards listed below.

GROSS FLOOR AREA	REQUIRED NUMBER OF LOADING SPACES
10,000 to 16,000 square feet	1
16,001 to 40,000 square feet	2
40,001 to 64,000 square feet	3
64,001 to 96,000 square feet	4
96,001 to 128,000 square feet	5
128,001 to 160,000 square feet	6
160,001 to 196,000 square feet	7
For each additional 36,000 square feet	1 additional

B. Every building engaged in hotel, office building, restaurant, hospital, auditorium, convention hall, exhibition hall, sports arena/stadium or other similar use shall provide loading spaces in accordance with the standards listed below.

GROSS FLOOR AREA	REQUIRED NUMBER OF LOADING SPACES
40,000 TO 60,000 square feet	1
60,001 to 160,000 square feet	2
160,001 to 264,000 square feet	3
264,001 to 388,000 square feet	4
388,001 to 520,000 square feet	5
520,001 to 652,000 square feet	6
652,001 to 784,000 square feet	7
784,001 to 920,000 square feet	8
For each additional 140,000 square feet	1 additional

C. Each loading space required by this section shall be a minimum of ten feet wide, thirty feet long, and have an unobstructed vertical clearance of fourteen feet six inches, and shall be surfaced, improved and maintained as required by this chapter. Loading spaces shall be located so that trucks shall not obstruct pedestrian or vehicle traffic movement or project into any public right-of-way. All loading space areas shall be separated from parking areas and shall be designated as truck loading spaces.

D. Any loading space located within 100 feet of areas zoned for residential use shall be screened and operated as necessary to reduce noise and visual impacts. Noise mitigation measures may include architectural or structural barriers, beams, walls, or restrictions on the hours of operation.

E. Multi-story self-service storage facilities shall provide two loading spaces, and single story facilities one loading space, adjacent to each building entrance that provides common access to interior storage units. Each loading berth shall measure not less than twenty-five feet by twelve feet with an unobstructed vertical clearance of fourteen feet six inches, and shall be surfaced, improved and maintained as required by this chapter. Any floor area additions or structural alterations to a building shall be required to provide loading space or spaces as set forth in this chapter. (Ord. 13022 § 24, 1998: Ord. 10870 § 411, 1993).

21A.18.080 Stacking spaces for drive-through facilities.

A. A stacking space shall be an area measuring eight feet by twenty feet with direct forward access to a service window of a drive-through facility. A stacking space shall be located to prevent any vehicles from extending onto the public right-of-way, or interfering with any pedestrian circulation, traffic maneuvering, or other parking space areas. Stacking spaces for drive-through or drive-in uses may not be counted as required parking spaces.

B. Uses providing drive-up or drive-through services shall provide vehicle stacking spaces as follows:

1. For each drive-through lane of a bank or financial institution, business service or other drive-through use not listed, a minimum of five stacking spaces shall be provided;

2. For each drive-through lane of a restaurant that makes provision for on-premises consumption of food or drink or whose building floor area is more than one hundred sixty square feet, a minimum of seven stacking spaces shall be provided; and

3. For each drive-through lane of a restaurant that makes no provision for on-premises consumption of food or drink and whose building floor area is one hundred sixty square feet or less:

a. A minimum of three stacking spaces shall be provided if:

(1) there are three or more other restaurants within one-quarter mile of the restaurant that also make no provision for on-premises consumption of food or drink and whose building floor area is one hundred sixty square feet or less; or

(2) if vehicles on the drive-through lane of the restaurant does not exceed six vehicles per any half-hour period;

b. A minimum of four stacking spaces shall be provided if:

(1) there are two or fewer other restaurants within one-quarter mile of the restaurant that also make no provision for on-premises consumption of food or drink and whose building floor area is one hundred sixty square feet or less; or

(2) vehicles on the drive-through lane of the restaurant are seven or more but less than eleven vehicles per any half-hour period;

c. A minimum of five stacking spaces shall be provided if:

(1) there are no restaurants within one-quarter mile of the restaurant that also make no provision for on-premises consumption of food or drink and whose building floor area is one hundred sixty square feet or less; or

(2) vehicles on the drive-through lane of the restaurant are eleven or more vehicles per any half-hour period; or

d. The director may modify the number of required stacking spaces, after consultation with other public agencies or after consideration of traffic studies provided by the applicant, but to no fewer than three stacking spaces. (14943 § 1, 2004: Ord. 11621 § 62, 1994: Ord. 10870 § 412, 1993).

21A.18.090 Transit and rideshare provisions.

A. All land uses listed in K.C.C. 21A.08.060A (Government/Business Services), and in K.C.C. 21A.08.080A (Manufacturing), hospitals, high schools, vocational schools, universities and specialized instruction schools shall be required to reserve one parking space of every 20 required spaces for rideshare parking as follows:

1. The parking spaces shall be located closer to the primary employee entrance than any other employee parking except disabled;

2. Reserved areas shall have markings and signs indicating that the space is reserved; and

3. Parking in reserved areas shall be limited to vanpools and carpools established through ride share programs by public agencies and to vehicles meeting minimum rideshare qualifications set by the employer;

B. The director may reduce the number of required off-street parking spaces when one or more scheduled transit routes provide service within 660 feet of the site. The amount of reduction shall be based on the number of scheduled transit runs between 7:00 - 9:00AM and 4:00 - 6:00PM each business day up to a maximum reduction as follows:

1. Four percent for each run serving land uses in K.C.C. 21A.08.060A (Government/Business Services) and K.C.C. 21A.08.080A (Manufacturing) up to a maximum of forty percent; and

2. Two percent for each run serving land uses in K.C.C. 21A.08.040A (Recreation/Culture), 21A.08.050A (General Services) and 21A.08.060A (Retail/Wholesale) up to a maximum of twenty percent; and

C. All uses which are located on an existing transit route and are required under the computation for required off-street parking spaces in K.C.C. 21A.18.030A to provide more than 200 parking spaces may be required to provide transit shelters, bus turnout

lanes or other transit improvements as a condition of permit approval. Uses which reduce required parking under subsection B of this section shall provide transit shelters if transit routes adjoin the site. (Ord. 11621 § 63, 1994: Ord. 10870 § 413, 1993).

21A.18.100 Pedestrian and bicycle circulation and access.

A. Non residential uses. All permitted nonresidential uses shall provide pedestrian and bicycle access within and onto the site. Access points onto the site shall be provided (a) approximately every 800 to 1,000 feet along existing and proposed perimeter sidewalks and walkways, and (b) at all arrival points to the site, including abutting street intersections, crosswalks, and transit stops. In addition, access points to and from adjacent lots shall be coordinated to provide circulation patterns between developments.

B. Residential uses.

1. All permitted residential uses of five or more dwelling units shall provide pedestrian and bicycle access within and onto the site. Access points onto the site shall be provided (a) approximately every 800 to 1,000 feet along existing and proposed perimeter sidewalks and walkways, and (b) at all arrival points to the site, including abutting street intersections, crosswalks, and transit and school bus stops. In addition, access points to and from adjacent lots shall be coordinated to provide circulation patterns between sites.

2. Residential uses of five or more dwelling units shall provide for non-motorized circulation between cul-de-sacs or groups of buildings to allow pedestrian and bicycle access within and through the development to adjacent activity centers, parks, common tracts, dedicated open space intended for active recreation, schools or other public facilities, transit and school bus stops, and public streets.

3. Access shall only be required to school bus stops that are within or adjacent to a proposed residential use of five or more dwelling units and that are identified by the affected school district in response to a Notice of Application. In order to allow school districts to identify school bus stops, the department shall send a Notice of Application to affected school districts on all applications for residential uses of five or more dwelling units.

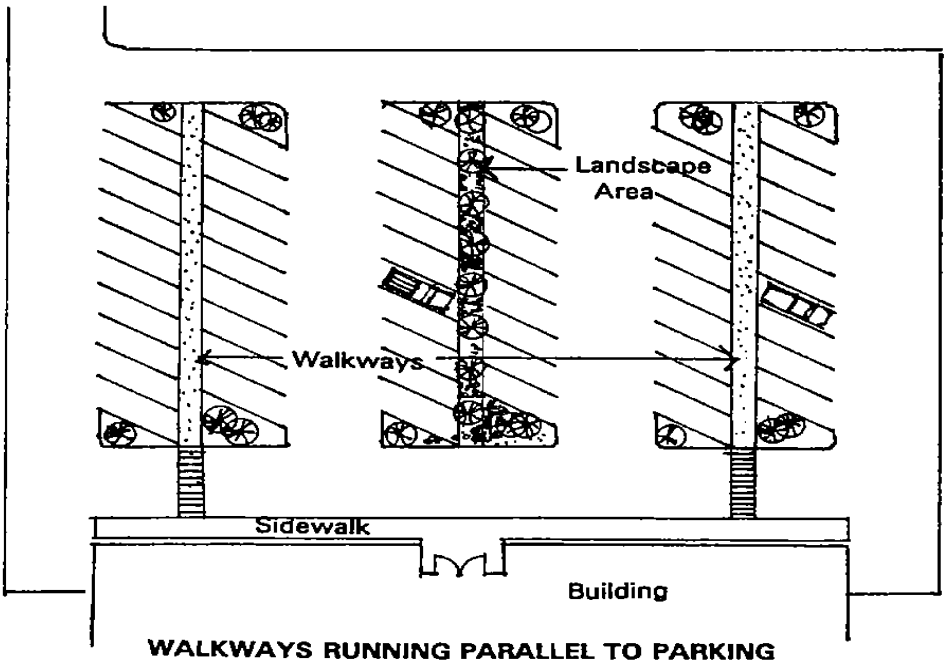

WALKWAYS RUNNING PARALLEL TO PARKING

C. Walkways shall form an on-site circulation system that minimizes the conflict between pedestrians and traffic at all points of pedestrian access to on-site parking and building entrances. Walkways shall be provided when the pedestrian access point onto the site, or any parking space, is more than 75 feet from the building entrance or principal on-site destination and as follows:

1. All developments which contain more than one building shall provide walkways between the principal entrances of the buildings;

2. All non-residential buildings set back more than 100 feet from the public right-of-way shall provide for direct pedestrian access from the building to buildings on adjacent lots; and

3. Walkways across parking areas shall be located as follows:

a. Walkways running parallel to the parking rows shall be provided for every six rows. Rows without walkways shall be landscaped or contain barriers or other means to encourage pedestrians to use the walkways; and

b. Walkways running perpendicular to the parking rows shall be no further than twenty parking spaces. Landscaping, barriers or other means shall be provided between the parking rows to encourage pedestrians to use the walkways;

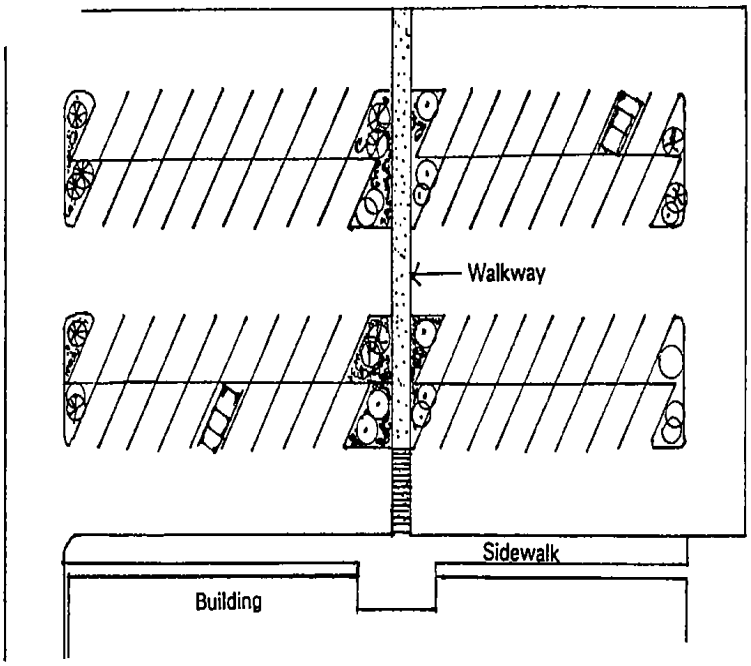

WALKWAYS RUNNING PERPENDICULAR TO PARKING

D. Pedestrian and bicycle access and walkways shall meet the following minimum design standards:

1. Access and walkways shall be well lit and physically separated from driveways and parking spaces by landscaping, berms, barriers, grade separation or other means to protect pedestrians from vehicular traffic;

2. Access and walkways shall be a minimum of 48 inches of unobstructed width and meet the surfacing standards of the King County Road Standards for walkways or sidewalks;

3. The minimum standard for walkways required to be accessible for persons with disabilities shall be designed and constructed to comply with the current State Building Code regulations for barrier-free accessibility;

4. A crosswalk shall be required when a walkway crosses a driveway or a paved area accessible to vehicles; and

E. Blocks in excess of 660 feet shall be provided with a crosswalk at the approximate midpoint of the block.

F. The director may waive or modify the requirements of this section when:

1. Existing or proposed improvements would create an unsafe condition or security concern;

2. There are topographical constraints, or existing or required structures effectively block access;

3. The site is in a rural area outside of or not contiguous to an activity center, park, common tract, dedicated open space, school, transit stop or other public facility;

4. The land use would not generate the need for pedestrian or bicycle access; or

5. the public is not allowed access to the subject land use.

The director's waiver may not be used to modify or waive the requirements of K.C.C. 21A.18.100 relating to sidewalks and safe walking conditions for students.

G. The provisions of this section shall not apply on school district property. (Ord. 12793 § 1, 1997: Ord. 11978 § 15, 1995: Ord. 11621 § 64 1994: Ord. 10870 § 414, 1993).

21A.18.110 Off-street parking plan design standards.

A. Off-street parking areas shall not be located more than six hundred feet from the building they are required to serve for all uses except those specified as follows; where an off-street parking area does not abut the building it serves, the required maximum distance shall be measured from the nearest building entrance that the parking area serves:

1. For all single detached dwellings the parking spaces shall be located on the same lot they are required to serve;

2. For all other residential dwellings at least a portion of parking areas shall be located within one hundred fifty feet from the building or buildings they are required to serve;

3. For all nonresidential uses permitted in rural area and residential zones, the parking spaces shall be located on the site they are required to serve and at least a portion of parking areas shall be located within one hundred fifty feet from the nearest building entrance they are required to serve;

4. In designated activity, community business and neighborhood business centers, parking lots shall be located to the rear or sides of buildings. Relief from this subsection A.4 may be granted by the director only if the applicant can demonstrate that there is no practical site design to meet this requirement. The director may allow only the number of parking spaces that cannot be accommodated to the rear or sides of buildings to be located to the front of buildings;

5. Parking lots shall be so arranged as to permit the internal circulation of vehicles between parking aisles without re-entering adjoining public streets; and

6. Parking for the disabled shall be provided in accordance with K.C.C. 21A.18.060.

B. The minimum parking space and aisle dimensions for the most common parking angles are shown on the table in this subsection. For parking angles other than those shown on the chart, the minimum parking space and aisle dimensions shall be determined by the director. Regardless of the parking angle, one-way aisles shall be at least ten feet wide, and two-way aisles shall be at least twenty feet wide. If dead-end aisles are used in the parking layout, they shall be constructed as two-way aisles. Parking plans for angle parking shall use space widths no less than eight feet six inches for a standard parking space design and eight feet for a compact car parking space design.

MINIMUM PARKING STALL AND AISLE DIMENSIONS

A	B	C	D	E	F
PARKING ANGLE	STALL WIDTH	CURB LENGTH	STALL DEPTH	AISLE WIDTH 1-WAY 2-WAY	UNIT DEPTH 1-WAY 2-WAY
0 0	8.0*	20.0*	8.0	12.0 20.0	** **
	Min 8.5	22.5	8.5	12.0 20.0	29.0 37.0
	Desired 9.0	22.5	9.0	12.0 20.0	30.0 38.0
30 30	8.0*	16.0*	15.0	10.0 20.0	** **
	Min 8.5	17.0	16.5	10.0 20.0	42.0 53.0
	Desired 9.0	18.0	17.0	10.0 20.0	44.0 54.0
45 45	8.0*	11.5*	17.0*	12.0 20.0	** **
	Min 8.5	12.0		12.0 20.0	50.0 58.0
	Desired 9.0	12.5		12.0 20.0	51.0 59.0
60 60	8.0*	9.6*	18.0	18.0 20.0	** **
	Min 8.5	10.0	20.0	18.0 20.0	58.0 60.0
	Desired 9.0	10.5	21.0	18.0 20.0	60.0 62.0
90	8.0*	8.0*	16.0*	24.0 24.0	** **
	Min 8.5	8.5	18.0	24.0 24.0	60.0 60.0
	Desired 9.0	9.0	18.0	23.0 24.0	60.0 60.0

* for compact stalls only

** variable with compact and standard combinations

NOMENCLATURE OF OFF-STREET PARKING AREA

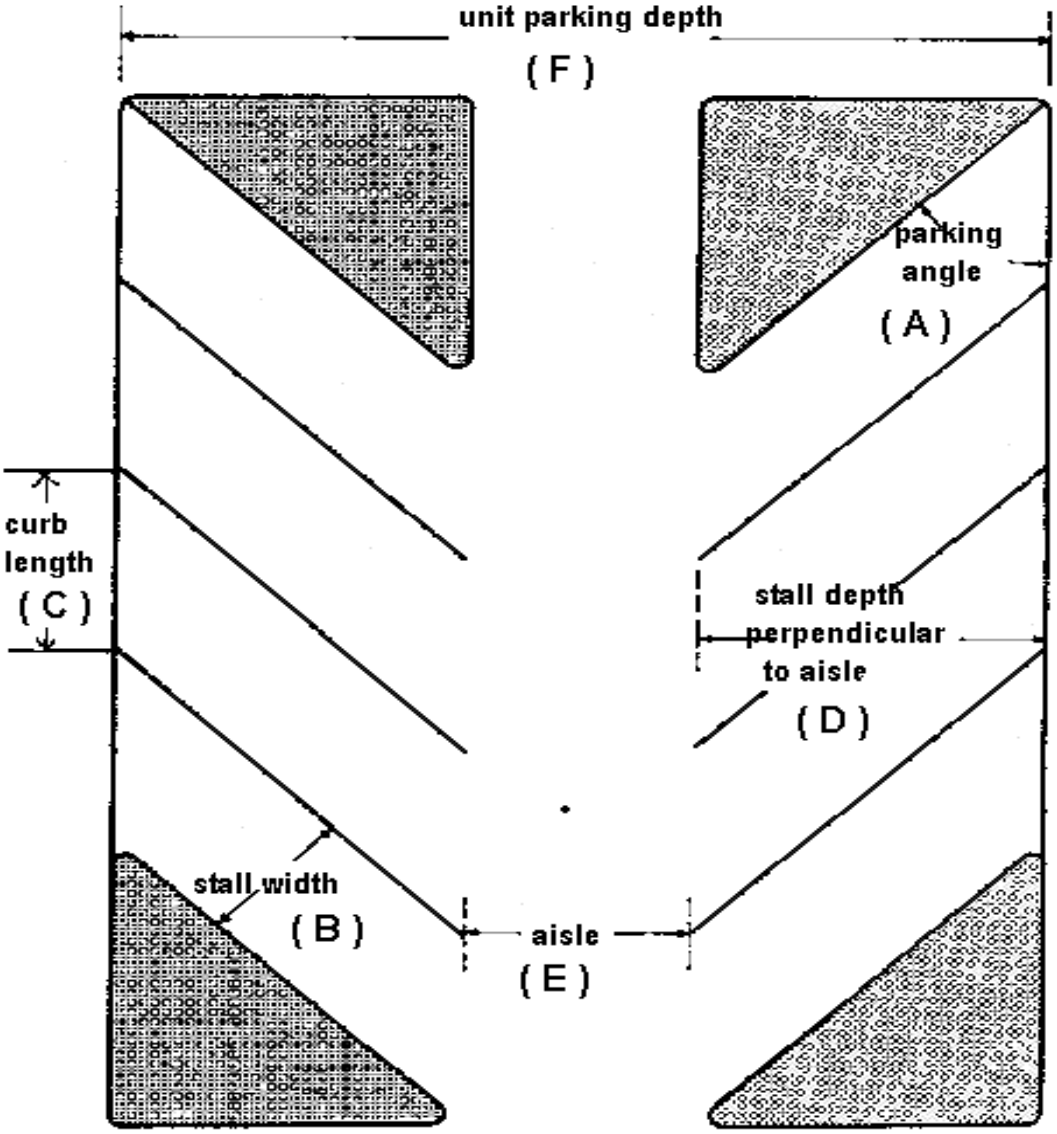

C. Any parking spaces abutting a required landscaped area on the driver or passenger side of the vehicle shall provide an additional eighteen inches above the minimum space width requirement to provide a place to step other than in the landscaped area. The additional width shall be separated from the adjacent parking space by a parking space division stripe.

D. The parking stall depth may be reduced if vehicles overhang a walkway or landscaping under the following conditions:

1. Wheelstops or curbs are installed;

2. The remaining walkway provides a minimum of forty-eight inches of unimpeded passageway for pedestrians;

3. The amount of space depth reduction is limited to a maximum of eighteen inches; and

4. Landscaping is designed in accordance with K.C.C. 21A.16.070.E.

E. Driveways providing ingress and egress between off-street parking areas and abutting streets shall be designed, located and constructed in accordance with K.C.C. chapter 14.42, Road Standards. Driveways for single detached dwellings, no more than twenty feet in width, may cross required setbacks or landscaped areas to provide

access between the off-street parking areas and the street, provided no more than fifteen percent of the required landscaping or setback area is eliminated by the driveway. Joint use driveways may be located within required landscaping or setback areas. Driveways for all other developments may cross or be located within required setbacks or landscaped areas to provide access between the off-street parking areas and the street, if no more than ten percent of the required landscaping is displaced by the driveway and the driveway is located no closer than five feet from any property line except where intersecting the street.

F. Parking spaces required under this title shall be located as follows:

1. For single detached dwelling units the required parking spaces shall be outside of any required setbacks or landscaping, but driveways crossing setbacks and required landscaping may be used for parking. However, if the driveway is a joint use driveway, no vehicle parked on the driveway shall obstruct any joint user's access to the driveway or parking spaces;

2. For all other developments parking spaces may be permitted by the director in setback areas in accordance with an approved landscape plan; and

3. For nonresidential uses in rural area and residential zones, parking is permitted in setback areas in accordance with K.C.C. 21A.12.220.

G. Lighting shall be provided for safety of traffic and pedestrian circulation on the site. It shall be designed to minimize direct illumination of abutting properties and adjacent streets. The director shall have the authority to waive the requirement to provide lighting.

H. Tandem or end-to-end parking is allowed in residential developments. Apartment or townhouse developments may have tandem parking areas for each dwelling unit but shall not combine parking for separate dwelling units in tandem parking areas.

I. All vehicle parking and storage for single detached dwellings must be in a garage, carport or on an approved impervious surface. Any impervious surface used for vehicle parking or storage must have direct and unobstructed driveway access.

J. The total number of vehicles parked or stored outside of a building on a single family lot in the R-1 through R-8 zones, excluding recreational vehicles and trailers, shall not exceed six vehicles on lots that are twelve thousand five hundred square feet or less and eight vehicles on lots that are greater than twelve thousand five hundred square feet.

K. Vanpool and carpool parking areas shall meet the following minimum design standards:

1. A minimum vertical clearance of seven feet three inches shall be provided to accommodate van vehicles if designated vanpool and carpool parking spaces are located in a parking structure; and

2. A minimum turning radius of twenty-six feet four inches with a minimum turning diameter, curb to curb, of fifty-two feet five inches shall be provided from parking aisles to adjacent vanpool and carpool parking spaces.

L. Direct access from the street right-of-way to off-street parking areas shall be subject to K.C.C. 21A.28.120.

M. No dead-end alley may provide access to more than eight off-street parking spaces.

N. Any parking stalls located in enclosed buildings must be totally within the enclosed building. (Ord. 17539 § 41, 2013: Ord. 17191 § 39, 2011: Ord. 14309 § 10, 2002: Ord. 14045 § 47, 2001: Ord. 13022 § 25, 1998: Ord. 11978 § 16, 1995: Ord. 11621 § 65, 1994: Ord. 10870 § 415, 1993).

21A.18.120 Off-street parking construction standards.

A. Off-street parking areas shall have dust-free, all-weather surfacing. Typical approved sections are illustrated below. Frequently used (at least five days a week) off-street parking areas shall conform to the standards shown in A below or an approved equivalent. If the parking area is to be used more than 30 days per year but less than five days a week, then the standards to be used shall conform to the standards shown in B below or an approved equivalent. An exception to these surfacing requirements may be made for certain uses that require intermittent use of their parking facilities less than 30 days per year. Any surface treatment other than those graphically illustrated below must be approved by the director.

MINIMUM SURFACING REQUIREMENTS

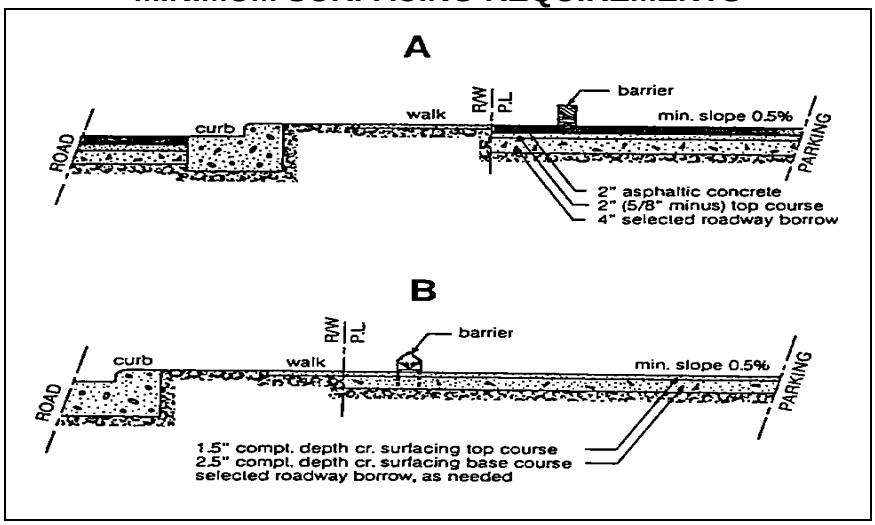

B. Grading work for parking areas shall meet the requirements of K.C.C. 16.82. Drainage and erosion/sedimentation control facilities shall be provided in accordance with K.C.C. 9.04.

C. Asphalt or concrete surfaced parking areas shall have parking spaces marked by surface paint lines or suitable substitute traffic marking material in accordance with the Washington State Department of Transportation Standards. Wheel stops are required where a parked vehicle would encroach on adjacent property,

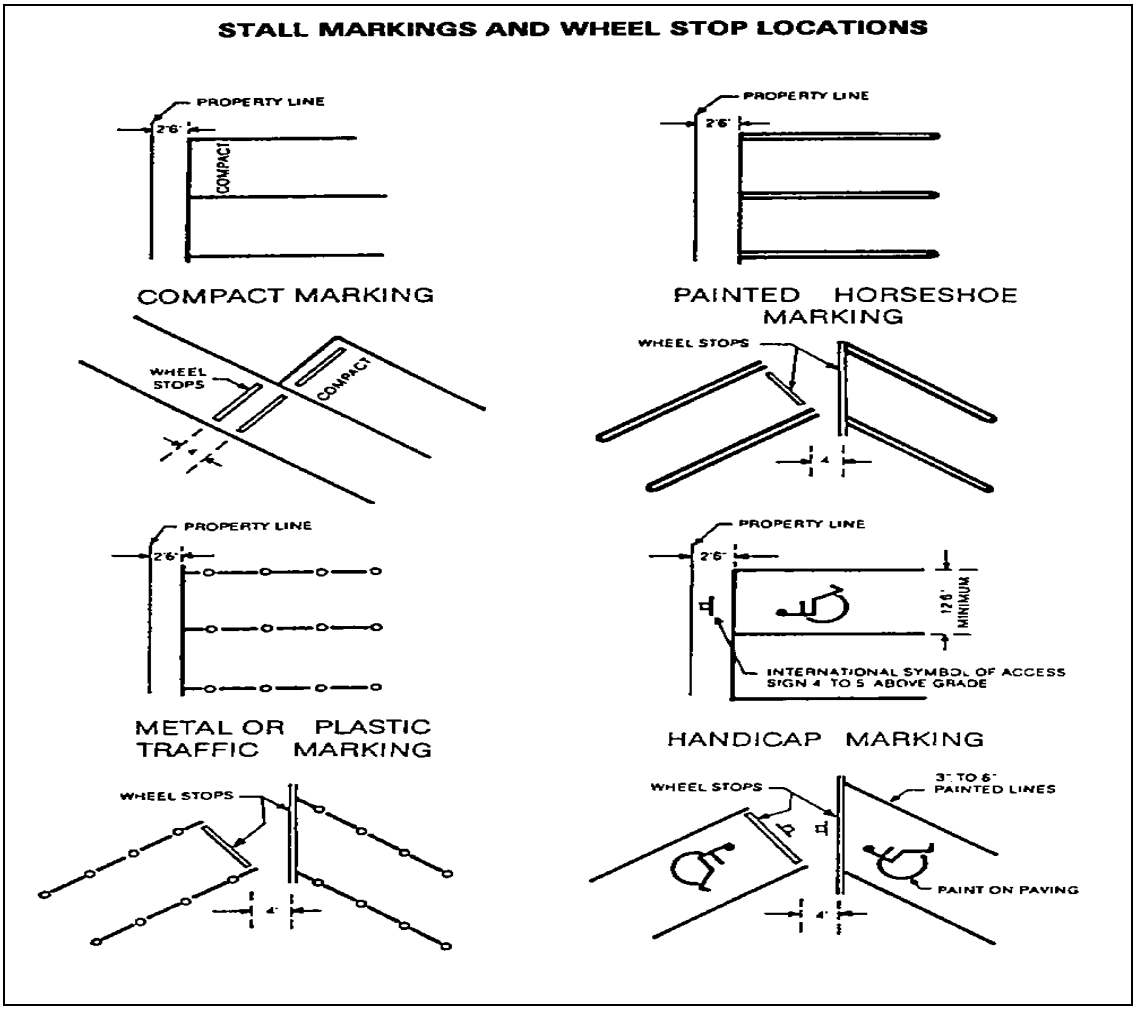

pedestrian access or circulation areas, right-of-way or landscaped areas. Typically approved markings and wheel stop locations are illustrated below.
(Ord. 10870 § 416, 1993).

21A.18.130 Compact car allowance requirements. In any development containing more than 20 parking spaces, up to 50 percent of the total number of spaces may be sized to accommodate compact cars, subject to the following:

A. Each space shall be clearly identified as a compact car space by painting the word "COMPACT" in capital letters, a minimum of 8 inches high, on the pavement at the base of the parking space and centered between the striping;

B. Aisle widths shall conform to the standards set for standard size cars; and

C. Apartment developments with less than twenty parking spaces may designate up to 40 percent of the required parking spaces as compact spaces. (Ord. 10870 § 417, 1993).

21A.18.140 Internal circulation road standards. Internal access roads to off-street parking areas shall conform with the surfacing and design requirements for private commercial roads set forth in K.C.C. 14.42 King County Roads Standards. (Ord. 10870 § 418, 1993).

21A.20 DEVELOPMENT STANDARDS - SIGNS

Sections:

21A.20.010 Purpose.
21A.20.020 Permit requirements.
21A.20.030 Exempt signs.
21A.20.040 Prohibited signs or displays.
21A.20.050 Sign area calculation.
21A.20.060 General sign requirements.
21A.20.065 Community bulletin board signs.
21A.20.070 Resource zone signs.
21A.20.080 Residential zone signs.
21A.20.090 Office zone signs.
21A.20.095 Neighborhood business zone signs.
21A.20.100 Community business and industrial zone signs.
21A.20.110 Regional business zone signs.
21A.20.115 Mixed-use development signs in R-12 through R-48 zones.
21A.20.120 Signs or displays of limited duration.
21A.20.130 Billboards: Location and height standards.
21A.20.140 Billboards: General requirements.
21A.20.150 Billboards: Special restrictions in the CB zone.
21A.20.160 Billboards: Alteration or relocation limitations.
21A.20.170 Billboards: View and vegetative screening protections.
21A.20.180 Billboard free areas.
21A.20.190 Community identification signs.

21A.20.010 Purpose. The purpose of this chapter is to enhance the visual environment of the county by:

A. Establishing standards that regulate the type, number, location, size, and lighting of signs;

B. Recognizing the private purposes of signs for the identification of businesses and promotion of products and services; and

C. Recognizing the public purposes of signs which includes considerations of traffic safety, economic and aesthetic welfare. (Ord. 10870 § 419, 1993).

21A.20.020 Permit requirements.

A. Except as otherwise permitted by this chapter, no sign shall be erected, altered or relocated without approval by the county.

B. No building permit shall be required for repainting, cleaning, or other normal maintenance and repair of a sign, or for sign face and copy changes that do not alter the size or structure of the sign. (Ord. 10870 § 420, 1993).

21A.20.030 Exempt signs. The following signs or displays are exempted from the regulations under this chapter:

A. Historic site markers or plaques, gravestones, and address numbers;

B. Signs required by law, including but not limited to:

1. Official or legal notices issued and posted by any public agency or court; or
2. Traffic directional or warning signs.

C. Plaques, tablets or inscriptions indicating the name of a building, date of erection, or other commemorative information, which are an integral part of the building structure or are attached flat to the face of the building, which are nonilluminated, and which do not exceed four square feet in surface area;

D. Incidental signs, which shall not exceed two square feet in surface area, provided that said size limitation shall not apply to signs providing directions, warnings or information when established and maintained by a public agency;

E. State or Federal flags;

F. Religious symbols; and

G. The flag of a commercial institution, provided no more than one flag is permitted per business premises, and further provided the flag does not exceed 20 square feet in surface area. (Ord. 10870 § 421, 1993).

21A.20.040 Prohibited signs or displays. Except as otherwise specifically allowed by this chapter, the following signs or displays are prohibited:

A. Portable signs including, but not limited to, sandwich/A-frame signs and mobile readerboard signs, and excluding signs permitted under K.C.C. 21A.20.120;

B. Private signs on utility poles;

C. Signs which, by reason of their size, location, movement, content, coloring or manner of illumination may be confused with traffic control signs or signals;

D. Signs located in the public right-of-way; and

E. Posters, pennants, string of lights, blinking lights, balloons, searchlights and other displays of a carnival nature; except as architectural features, or on a limited basis as seasonal decorations or as provided for in K.C.C. 21A.20.120 as grand opening displays.

F. Changing message center signs. (Ord. 16267 § 35, 2008: Ord. 10870 § 422, 1993).

21A.20.050 Sign area calculation.

A. Sign area for non-monument free-standing signs shall be calculated by determining the total surface area of the sign as viewed from any single vantage point, excluding support structures.

B. Sign area for letters or symbols painted or mounted directly on walls or monument signs or on the sloping portion of a roof shall be calculated by measuring the smallest single rectangle which will enclose the combined letters and symbols.

C. Sign area for signs contained entirely within a cabinet and mounted on a wall, roof or monument shall be calculated by measuring the entire area of the cabinet. (Ord. 13014 § 4, 1998: Ord. 10870 § 423, 1993).

21A.20.060 General sign requirements.

A. All signs, except billboards, community bulletin boards, community identification signs, political signs, real estate signs and special event signs, shall be on-premise signs, except that uses located on lots without public street frontage in business, office and industrial zones may have one off-premise directional sign of no more than sixteen square feet.

B. Fuel price signs shall not be included in sign area or number limitations of K.C.C. 21A.20.090, 21A.20.095, 21A.20.100 and 21A.20.110, but only if the signs do not exceed twenty square feet per street frontage.

C. Except as otherwise provided in K.C.C. 21A.20.115 and 21A.20.080.A.3, projecting and awning signs and signs mounted on the sloping portion of roofs shall not be permitted for uses in the resource, rural area and residential zones. In other zones, projecting and awning signs and signs mounted on the sloping portion of roofs may be used in lieu of wall signs, but only if:

1. They maintain a minimum clearance of eight feet above finished grade;

2. They do not project more than six feet perpendicular from the supporting building facade;

3. They meet the standards of subsection J. of this section if mounted on the roof of a building; and

4. They shall not exceed the number or size permitted for wall signs in a zone.

D. Changing message center signs, and time and temperature signs, which can be a wall or freestanding sign, shall not exceed the size permitted for a wall or freestanding sign. Changing message center signs shall be permitted for all uses only in the NB, CB, RB, O and I zones and only for elementary, middle, junior, secondary and high schools and colleges and universities in the RA zone. Changing message center signs and time and temperature signs shall not exceed the maximum sign height permitted in the zone.

E. Directional signs shall not be included in the sign area or number limitation of K.C.C. 21A.20.070, 21A.20.095, 21A.20.100 and 21A.20.110, but only if the signs do not exceed six square feet in surface area and are limited to one for each entrance or exit to surface parking areas or parking structure.

F. Regarding sign illumination and glare:

1. Except as otherwise provided in this chapter, all signs may be illuminated;

2. The light source for indirectly illuminated signs shall be no farther away from the sign than the height of the sign;

3. Indirectly and directly illuminated signs shall be arranged so that no direct rays of light are projected from such artificial source into residences or any street right-of-way;

4. Electrical requirements for signs shall be governed by chapter 19.28 RCW and WAC 296-46-910; and

5. Signs with an on/off operation shall be permitted only in the CB, RB and I zones.

G. Maximum height for wall signs shall not extend above the highest exterior wall or structure upon which the sign is located.

H. Maximum height for projecting signs shall not extend above the highest exterior wall upon which the projecting sign is located.

I. Maximum height for awning signs shall not extend above the height of the awning upon which the awning sign is located.

J. Any sign attached to the sloping surface of a roof shall be installed or erected in such a manner that there are no visible support structures, shall appear to be part of the building itself, and shall not extend above the roof ridge line of the portion of the roof upon which the sign is attached.

K. Except as otherwise permitted by this chapter, off-premise directional signs shall not exceed four square feet in sign area.

L. Mixed use developments in the NB, CB, RB or O zones are permitted one permanent residential identification sign not exceeding thirty-two square feet in addition to the maximum sign area requirements in the zone where the mixed use development is located. (Ord. 17539 § 42, 2013: Ord. 16950 § 22, 2010: Ord. 16594 § 3, 2009: Ord. 16267 § 36, 2008: Ord. 15404 § 2, 2006: Ord. 13022 § 27, 1998: Ord. 13014 § 5, 1998: Ord. 10870 § 424, 1993).

21A.20.065 Community bulletin board signs.

A. One community bulletin board sign is permitted within each community plan designated activity center with the following limitations:

B. In the R, UR and RA zones community bulletin board signs may not exceed 32 square feet and are only permitted at public schools, police stations, fire stations or other public facilities;

C. In the O and NB zones community bulletin board signs may not exceed 40 square feet;

D. In the CB and I zones community bulletin board signs may not exceed 60 square feet; and

E. In the RB zone community bulletin board signs may not exceed 100 square feet. (Ord. 10870 § 425, 1993).

21A.20.070 Resource zone signs. Signs in the A, F, and M zones are limited as follows:

A. One residential identification sign, not exceeding two square feet, is permitted. One additional sign, not exceeding 24 square feet, is permitted to identify non-residential uses or to advertise goods or services available on site; and

B. Freestanding signs shall not exceed a height of six feet, and shall be setback at least 10 feet from street right-of-way. (Ord. 10870 § 426, 1993).

21A.20.080 Residential zone signs. Except as otherwise provided in K.C.C. 21A.20.115, signs in the R, UR and RA zones are limited as follows:

A. Nonresidential use:

1. One indirectly illuminated sign identifying nonresidential uses, not exceeding twenty-five square feet and not exceeding six feet in height is permitted, except as provided in subsection A.3. of this section;

2. Schools are permitted one sign per school or school facility entrance, which may be located in the setback. Two additional wall signs attached directly to the school or school facility are permitted. Changing message center signs, if allowed under K.C.C. 21A.20.060, shall be limited to hours of operation between 7a.m. and 10 p.m.; and

3. In lieu of the sign allowed under subsection A.1. of this section, one nonilluminated sign may be attached or painted on the sloping portion of a roof of a building located within one hundred feet of a state route as follows:

a. each sign shall not exceed fifty square feet in area and six feet in height;

b. each sign, and its mounting brackets, attached to the sloping surface of a roof shall not extend above the roof ridge line portion of the roof upon which the sign is attached; and

c. no more than two signs may be attached or painted on the roof.

B. Residential use:

1. One residential identification sign not exceeding two square feet is permitted;

2. One permanent residential development identification sign not exceeding thirty-two square feet is permitted for each entrance into a development. The maximum height for the sign shall be six feet. The sign may be freestanding or mounted on a wall, fence or other structure; and

3. Home occupation and home industry signs are limited to:

a. one nonilluminated wall sign not exceeding ten percent of the building façade on which they are located; and

b. in the RA zone, one nonilluminated freestanding sign not exceeding twenty-four square feet and a maximum height of six feet. (Ord. 16950 § 21, 2010: Ord. 16594 § 4, 2009: Ord. 16267 § 37, 2008: Ord. 15404 § 3, 2006: Ord. 12595 § 1, 1997: Ord. 10870 § 427, 1993).

21A.20.090 Office zone signs. Signs in the O zones shall be limited as follows:

A. Wall signs are permitted, provided they do not total an area more than 10 percent of the building facade on which they are located and provided they are limited to building facades with street frontage.

B. Freestanding signs:

1. One freestanding sign not exceeding 50 square feet is permitted for each street frontage of the lot, provided corner lots with a street frontage of less than 100 feet on each street shall be permitted only one freestanding sign;

2. On lots where more than one freestanding sign is permitted, the sign area permitted for individual freestanding signs may be combined; provided the combined sign does not exceed 80 square feet; and

3. The maximum height for freestanding signs shall be 15 feet. (Ord. 10870 § 428, 1993).

21A.20.095 Neighborhood business zone signs. Signs in the NB zones shall be limited as follows:

A. Wall signs are permitted, provided they do not total an area more than 10 percent of the building facade on which they are located;

B. Freestanding signs:

1. One freestanding sign not exceeding 50 square feet is permitted for each street frontage of the lot, provided corner lots with a street frontage of less than 100 feet on each street shall be permitted only one freestanding sign;

2. Multiple tenant developments that have more than 300 feet of street frontage on one street may have one additional freestanding sign for each 300 feet of street frontage, or portion thereof. Such signs shall be separated from one another by a minimum of 150 feet, if located on the same street frontage;

3. On lots where more than one freestanding sign is permitted, the sign area permitted for individual freestanding signs may be combined; provided the combined sign does not exceed 150 square feet; and

4. The maximum height for freestanding signs shall be 15 feet. (Ord. 10870 § 429, 1993).

21A.20.100 Community business and Industrial zone signs. Signs in the CB and I zones shall be limited as follows:

A. Wall signs are permitted, provided they do not total an area more than 15 percent of the building facade on which they are located;

B. Freestanding signs:

1. One freestanding sign not exceeding 85 square feet, plus an additional 20 square feet for each additional business in a multiple tenant structure but not to exceed 145 square feet total, is permitted for each street frontage of the lot, provided corner lots with a street frontage of less than 100 feet on each street shall be permitted only one freestanding sign;

2. Multiple tenant developments that have more than 300 feet of street frontage on one street may have one additional freestanding sign for each 300 feet of street frontage, or portion thereof. Such signs shall be separated from one another by a minimum of 150 feet, if located on the same street frontage;

3. On lots where more than one freestanding sign is permitted, the sign area permitted for individual freestanding signs may be combined provided the combined sign area does not exceed 250 square feet; and

4. The maximum height for freestanding signs shall be 20 feet. (Ord. 10870 § 430, 1993).

21A.20.110 Regional business zone signs. Signs in the RB zone shall be limited as follows:

A. Wall signs are permitted, provided they do not total an area more than 15 percent of the building facade on which they are located;

B. Freestanding signs;

1. One freestanding sign not exceeding 170 square feet is permitted for each street frontage of the lot, provided corner lots with a street frontage of less than 100 feet on each street shall be permitted only one freestanding sign;

2. Multiple tenant developments that have more than 300 feet of street frontage on one street may have one additional freestanding sign for each 300 feet of street frontage, or portion thereof. Such signs shall be separated from one another by a minimum of 150 feet, if located on the same street frontage not exceeding 150 square feet;

3. On lots where more than one freestanding sign is permitted, the sign area permitted for individual freestanding signs may be combined; provided the combined sign area does not exceed 300 square feet; and

4. The maximum height for a freestanding sign shall be 25 feet. (Ord. 10870 § 431, 1993).

21A.20.115 Mixed-use development signs in R-12 through R-48 zones. In a mixed-use development in the R-12 through R-48 zones in which the combined total of all nonresidential establishments exceeds fifteen thousand square feet of gross floor area, signs are limited as follows:

A. Signs for nonresidential uses are permitted as provided in K.C.C. 21A.20.095;

B. Signs for residential uses are permitted as follows:

1. One permanent residential identification sign not exceeding thirty-two square feet is permitted per building for each street frontage of the lot. A corner lot with a street frontage of less than one hundred feet on each street shall be permitted only one sign;

2. The maximum height for freestanding signs shall be fifteen feet;

3. The sign may be freestanding or mounted on a fence or a wall or other structure; and

4. In lieu of wall signs, projecting and awning signs and signs mounted on the sloping portion of roofs are permitted if the signs:

a. have a minimum clearance of eight feet above finished grade;

b. do not project more than six feet perpendicular from the supporting building facade;

c. meet the standards of K.C.C. 21A.20.060.J, if mounted on the roof of a building; and

d. do not total an area more than ten percent of the building façade on which they are located. (Ord. 15404 § 1, 2006).

21A.20.120 Signs or displays of limited duration. The following temporary signs or displays are permitted and except as required by the K.C.C. Title 16, or as otherwise permitted in this chapter, do not require building permits:

A. Grand opening displays:

1. Signs, posters, pennants, strings of lights, blinking lights, balloons and searchlights are permitted for a period of up to one month to announce the opening of a new enterprise or the opening of an enterprise under new management; and

2. All grand opening displays shall be removed upon the expiration of 30 consecutive days;

B. Construction signs:

1. Construction signs identifying architects, engineers, planners, contractors or other individuals or firms involved with the construction of a building and announcing

the character of the building or the purpose for which the building is intended may be displayed;

2. One nonilluminated, double-faced sign is permitted for each public street upon which the project fronts;

3. No sign shall exceed 32 square feet in surface area or ten feet in height, or be located closer than 30 feet from the property line of the adjoining property; and

4. Construction signs must be removed by the date of first occupancy of the premises or one year after placement of the sign, whichever occurs first;

C. Political Signs:

1. Signs, posters or bills promoting or publicizing candidates for public office or issues that are to be voted upon in a general or special election may be displayed on private property with the consent of the property owner. Any such sign, poster or bill shall be removed within ten days following the election; and

2. No sign, poster, bill or other advertising device shall be located on public property or within public easements or street right-of-way;

D. Real estate signs. All temporary real estate signs may be single or double-faced signs:

1. Signs advertising an individual residential unit for sale or rent shall be limited to one sign per street frontage. The sign may not exceed eight square feet in area, and shall not exceed six feet in height. The sign shall be removed within five days after closing of the sale, lease or rental of the property.

2. Portable off-premise residential directional signs announcing directions to an open house at a specified residence which is offered for sale or rent shall not exceed six square feet in area for each sign, and shall not exceed 42 inches in height. Such signs shall be permitted only when the agent or seller is in attendance at the property for sale or rent and may be located on the right-of-way outside of vehicular and bicycle lanes.

3. On-site commercial or industrial property for sale or rent signs shall be limited to one sign per street frontage, and shall not exceed 32 square feet in area. The sign shall not exceed 12 feet in height. The sign shall be removed within 30 days after closing of the sale, lease or rental of the property. A building permit is required and shall be issued for a one year period. The permit is renewable for one year increments up to a maximum of three years.

4. On-site residential development for sale or rent signs shall be limited to one sign per development. The sign shall not exceed 32 square feet in area, and shall not exceed 12 feet in height. A building permit is required and shall be issued for a one year period. The permit is renewable annually for up to a maximum of three years.

5. Off-site directional signs for residential developments shall be limited to six signs. Each sign shall not exceed 16 square feet in area, and shall include only the name of and directions to the residential development. The sign(s) shall be placed a maximum of two road miles from the nearest residential development entrance. No two signs for one residential development shall be located closer than 500 feet from one another on the same street. A single building permit is required for all signs and shall be issued for a one year period. The permit number and the permit expiration date must be clearly displayed on the face of each sign. The permit is renewable for one year increments up to a maximum of three years, provided that extensions will only be granted if the sign permit applicant has complied with the applicable regulations.

6. Residential on-premise informational signs shall be limited to one sign per feature, including but not limited to signs for information centers, model homes, parking areas or announcing features such as parks, playgrounds, or trails. Each sign shall not exceed 16 square feet in area, and shall not exceed six feet in height.

E. Community event signs:

1. Community event signs shall be limited to announcing or promoting a non-profit sponsored community fair, festival or event;

2. Community event signs may be displayed no more than the time period specified in the temporary use permit issued pursuant to K.C.C. 21A.44. Community event signs that do not require a temporary use permit shall not be displayed earlier than one month before the event; and

3. Community event signs shall be removed by the event sponsor within two weeks following the end of the community fair, festival or event. (Ord. 16267 § 38, 2008: Ord. 11621 § 66, 1994: Ord. 10870 § 432, 1993).

21A.20.130 Billboards: Location and height standards.

A. All billboard alterations or relocations shall comply with the following location and design standards:

1. Billboards shall only be located on sites zoned CB, RB or I;

2. No more than five billboard faces shall be oriented toward and visible from the same direction of travel within one mile of the proposed relocation site as measured along the adjacent roadway;

3. Billboards shall be located at least 100 feet from any other billboard, provided side-by-side, v-type and back-to-back billboard faces shall be considered one billboard for purposes of this subsection only;

4. The zoning on the opposite side of the street from a proposed relocation site must also permit billboards;

5. Type II billboards shall be at least one hundred feet from any rural area and residential zones. Type I billboards shall be at least three hundred thirty feet from rural area and residential zones;

6. No billboard shall extend beyond the property line of the billboard site;

7. No billboard shall be located more than one hundred feet from any adjacent arterial;

8. Billboards shall observe the same street setback as all buildings within fifty feet of the proposed billboard location;

9. Type I billboard faces shall only be located adjacent to arterials developed with at least two primary travel lanes in each direction. In all other locations, billboards shall be limited to Type II billboard faces; and

10. No single billboard structure shall support a total of more than two Type I billboard faces or the equivalent, and no single billboard structure shall orient more than one Type I billboard face or the equivalent in any single direction.

B. Height:

1. Billboards located in the CB or RB zone shall not exceed fifteen feet above the average height of all buildings within three hundred thirty feet of the billboard or thirty-five feet, whichever is less; and

2. Billboards located in the I zone shall not exceed fifteen feet above the average height of all buildings within three hundred feet of the billboard or forty-five feet, whichever is less. (Ord. 17539 § 43, 2013: Ord. 10870 § 433, 1993).

21A.20.140 Billboards: General requirements.

A. The total number of billboard faces within unincorporated King County shall not exceed the total number of billboard faces existing on June 20, 1988, except as provided in K.C.C. 21A.20.160E. In addition, the total number of existing billboard faces within each zone permitting billboards shall not be exceeded except as provided in K.C.C. 21A.20.150.

B. In the event that portions of unincorporated King County annex to incorporated cities or towns or incorporate after June 20, 1988, the total number of

allowable billboard faces shall be decreased by the number of faces existing in such areas on the effective date of annexation or incorporation.

C. As soon as practical after June 20, 1988, the county shall compile an inventory of existing billboards within the county. Until the inventory is completed, no billboard shall be erected, modified, or relocated, nor shall King County issue any permits. Following completion of the inventory, the county shall grant a billboard permit for each existing billboard reflecting the location, size, height, zoning, and the degree of conformity with the requirements of this chapter. Only inventoried billboards may be subsequently issued billboard alteration or relocation permits. Billboard owners can accelerate the inventory process by providing the necessary inventory information for their billboards. If owners have provided necessary inventory information for all billboards in their ownership, the county shall release billboard permits for that ownership, regardless of the degree of completion of the remainder of the inventory. (Ord. 10870 § 434, 1993).

21A.20.150 Billboards: Special restrictions in the CB zone.

A. In the event that a billboard owner elects to relocate CB zoned billboards outside of the CB zone, the CB zone designation shall be removed and that permit may not later be used to relocate a billboard in the CB zone.

B. Billboards may be relocated only within the zone district identified on the valid billboard permit, except the number of billboards permitted within non-CB zone district may increase only as a result of billboard relocation from within the CB zone district. (Ord. 10870 § 435, 1993).

21A.20.160 Billboards: Alteration or relocation limitations.

A. Except as provided in K.C.C. 21A.20.160D, billboards shall not be altered with regard to size, shape, orientation, height, or location without the prior issuance of a billboard alteration or relocation permit. All such permits shall require full compliance with the provisions of K.C.C. 21A.20.130 -.180.

B. There shall be no time limit on the eligibility to alter or relocate inventoried billboards; however, individual alteration and relocation permits shall expire if the approved modifications are not completed within one year of permit issuance. Any project not completed within this period shall be placed in a holding category until a new permit is issued by King County, and no further work on the subject billboard shall occur until a permit is issued.

C. Relocation of inventoried billboards shall also require the issuance of a demolition permit for the removal of the existing billboard. Billboard demolitions shall be completed within 90 days of permit issuance and prior to installation of the relocated billboard.

D. Ordinary and necessary repairs which do not change the size, shape, orientation, height, or location of an inventoried billboard shall not require alteration permits. Billboard copy replacement may occur at any time and is exempt from the requirement for alteration permits, provided:

1. New Type II billboard faces do not exceed the size of previously inventoried faces, or

2. New Type I billboard faces may only exceed the size of the previously inventoried face with temporary cut-out extensions if the billboard is otherwise conforming, and if the extensions do not exceed a total of 125 square feet. Any extension shall be removed with the next change of billboard copy.

E. Single Type I billboard faces may be replaced with two side-by-side Type II billboard faces, and likewise two side-by-side Type II billboard faces may be replaced

with a single Type I billboard face, provided each resulting billboard face complies with the location and height standards of K.C.C. 21A.20.130.

F. Any location or orientation alteration of billboards conforming to the provisions of K.C.C. 21A.20.130 - .180 shall be accompanied by the alteration or relocation of an equal number of billboards under the control of the same applicant which do not fully conform to these provisions, if any nonconforming billboards exist. Whenever more than one nonconforming billboard exists under a single ownership, they shall be made conforming in the following order:

1. Billboards deemed nonconforming pursuant to K.C.C. 21A.20.170;
2. Billboards located in zones which do not allow billboards;
3. Billboards located in billboard free areas;
4. Billboards located in the CB zone district; and
5. Any other nonconforming billboard. (Ord. 17029 § 2, 2011 (Expired 12/31/2012): Ord. 10870 § 436, 1993. Expired 12/31/2012).

21A.20.170 Billboards: View and vegetative screening protections.

A. Notwithstanding any other provision of K.C.C. 21A.20.130 - .180 or other applicable laws or regulations, no billboard shall be located or oriented in a manner that is within the direct line-of-sight of views of Mt. Rainier, Mt. Baker, the Olympic Mountains, Puget Sound, or any lake or river from adjacent public roadways. All applications for billboard alteration or relocation shall be certified by the applicant as meeting this provision. Any billboard subsequently found to violate this provision shall be deemed nonconforming and shall be required to become the next nonconforming billboard relocated pursuant to K.C.C. 21A.20.160F.

B. Notwithstanding any other provision of K.C.C. 21A.20.130 - .180 or other applicable law or regulation, no billboard owner or his agent shall remove, cut, or otherwise alter any vegetative screening on public property or private landscaping required by code as a condition of permit approval in order to improve the visibility of a nearby billboard. Should such an alteration occur, any billboard so benefited shall be deemed nonconforming and shall be required to become the next nonconforming billboard relocated pursuant to K.C.C. 21A.20.160F. (Ord. 11157 § 19, 1993: Ord. 10870 § 437, 1993).

21A.20.180 Billboard free areas.

A. Notwithstanding any other provision of K.C.C. 21A.20.130 -.180, no billboard shall be relocated in any of the following areas:

1. Sites listed in either the Washington State or National Register of Historic Places or on sites designated as county landmarks or community landmarks;
2. Open space and scenic resource sites identified in the adopted King County Open Space Plan;
3. Between any sites identified in Sections 21A.20.180A.1 or 21A.20.180A.2 and the nearest adjacent public roadways;
4. Within 660 feet of any state or county park;
5. Redondo Beach Road and Redondo Way from Redondo Beach Road to 13th Avenue South;
6. South 292nd Street from 65th Avenue South to State Highway 181;
7. The south and east side of State Highway 522 from Northeast 149th Street to 68th Avenue Northeast;
8. Northeast 175th Street from 61st Avenue Northeast to 68th Avenue Northeast;
9. Rainier Avenue South from the Renton city limits to the Seattle city limits;

10. South 188th Street and Orillia Road South from 46th Avenue South to Military Road South; and

11. Within 300 feet of the intersection of South 144th Street and 51st Avenue South.

B. After June 20, 1988, any billboard located in a designated billboard free area shall be deemed nonconforming and shall be relocated pursuant to K.C.C. 21A.20.160F. (Ord. 10870 § 438, 1993).

21A.20.190 Community identification signs. Community identification signs are permitted subject to the following provisions:

A. Only Unincorporated Activity Centers, urban planned developments or Rural Towns, or designated and delineated by the Comprehensive Plan, are eligible to be identified with community identification signs. Identification signs for Unincorporated Activity Centers, urban planned developments or Rural Towns shall be placed along the boundaries identified by the Comprehensive Plan;

B. Two types of community identification signs are permitted. Primary signs are intended to mark the main arterial street entrances to a designated community, Unincorporated Activity Center, urban planned development or Rural Town. Auxiliary signs are intended to mark entrances to a designated community, Unincorporated Activity Center, urban planned development or Rural Town along local access streets;

C. Primary signs are subject to the following provisions:

l. No more than four primary signs shall be allowed per Unincorporated Activity Center, urban planned development, Rural Town or designated community;

2. Each primary sign shall be no more than thirty-two square feet in area and no more than six feet in height; and

3. Primary signs shall only be located along arterial streets, outside of the right-of-way;

D. Auxiliary community identification signs are subject to the following provisions:

1. There shall be no limits on the number of auxiliary community identification signs allowed per Unincorporated Activity Center, urban planned development, Rural Town, or designated community; and

2. Each auxiliary sign shall be no more than two square feet, and shall be located only outside of the right-of-way; and

E. No commercial advertisement shall be permitted on either primary or auxiliary signs except as follows:

1. When located on property within the RA, UR, R1-8 and R12-48 zones, signs may have a logo or other symbol of a community service or business group, such as Kiwanis, Chamber of Commerce or a similar group, sponsoring construction of the sign or signs. Any permitted logo or symbol shall be limited to an area of no more than two square feet on primary signs and no more than seventy-two square inches on auxiliary signs; or

2. When located on properties within the NB, CB, RB, O and I zones, signs may have a logo or other symbol of the company, community service or business group sponsoring construction of the sign or signs. Any permitted logo or symbol shall be limited to an area of no more than four square feet on primary signs and no more than seventy-two square inches on auxiliary signs; and

F. Community identification signs shall be exempt from the provisions of K.C.C. 21A.20.060.A. that require signs to be on-premise. (17416 § 15, 2012: Ord. 16267 § 39, 2008: Ord. 13022 § 26, 1998).

21A.22 DEVELOPMENT STANDARDS - MINERAL EXTRACTION

Sections:

21A.22.010 Purpose.
21A.22.020 Applicability of chapter.
21A.22.030 Grading permits required.
21A.22.035 Community meeting.
21A.22.040 Nonconforming mineral extraction operations.
21A.22.050 Periodic review.
21A.22.060 Site design standards.
21A.22.070 Operating conditions and performance standards.
21A.22.081 Reclamation.
21A22.085 Mitigation and monitoring.
21A.22.090 Financial guarantees.

21A.22.010 Purpose. The purpose of this chapter is to establish standards that minimize the impacts of mineral extraction and materials processing operations upon surrounding properties by:

A. Ensuring adequate review of operating aspects of mineral extraction and materials processing sites;

B. Requiring project phasing on large sites to minimize environmental impacts;

C. Requiring minimum site areas large enough to provide setbacks and mitigations necessary to protect environmental quality; and

D. Requiring periodic review of mineral extraction and materials processing operations to ensure compliance with the approved operating standards. (Ord. 15032 § 23, 2004: Ord. 11157 § 20, 1993: Ord. 10870 § 439, 1993).

21A.22.020 Applicability of chapter. This chapter shall only apply to uses or activities that are mineral extraction or materials processing operations. (15032 § 24, 2004: Ord. 10870 § 440, 1993).

21A.22.030 Grading permits required. Extractive operations and materials processing operations shall commence only after issuance of a grading permit. (15032 § 25, 2004: Ord. 10870 § 441, 1993).

[Grading: See K.C.C. chapter 16.82]

21A.22.035 Community meeting.

A. Not later than thirty days after the department provides the notice of application to the public required by K.C.C. 20.20.060 on a mineral extraction or materials processing site or for an expansion of an existing mineral extraction or materials processing site or operation beyond the scope of the prior environmental review, the applicant shall hold a community meeting. The notice of application shall include notification of the date, time and location of the community meeting. At the meeting, the applicant shall provide information relative the proposal, including information on existing residences and lot patterns within one-quarter mile of potential sites and on alternative haul routes. The applicant shall also provide a preliminary evaluation at the meeting of any alternative routes that have been provided to the applicant in writing at least five days in advance of the meeting. The applicant shall provide to the department within fourteen days after the community meeting a written list of meeting attendees and documentation of the meeting.

B. Public notice of the community meeting required by this section shall be prepared, posted and distributed in accordance with K.C.C. 20.20.060 at least two weeks before the community meeting. In addition, the department shall:

1. Publish a notice of the meeting in a local newspaper of general circulation in the affected area;

2. Mail the notice of the meeting to all property owners within one-quarter mile of the proposed or expanded site or to at least twenty of the property owners nearest to the site, whichever is greater; and

3. Mail the notice of the meeting to all property owners within five hundred feet of any proposed haul route from the site to the nearest arterial. (17416 § 16, 2012: Ord. 15032 § 26, 2004).

21A.22.040 Nonconforming mineral extraction operations. To the maximum extent practicable, nonconforming mineral extraction operations shall be brought into conformance with the operating conditions and performance standards of this chapter during permit renewal. The department shall establish a schedule for conformance during the first periodic review of the nonconforming mineral extraction operation and incorporated into the permit conditions. (15032 § 27, 2004: Ord. 10870 § 442, 1993).

21A.22.050 Periodic review.

A. In addition to the review conducted as part of the annual renewal of a mineral extraction operating permit or materials processing permit, the department shall conduct a periodic review of mineral extraction and materials processing operation site design and operating standards at five-year intervals.

B. The periodic review is a Type 2 land use decision.

C. The periodic review shall determine:

1. Whether the site is operating consistent with all existing permit conditions; and

2. That the most current site design and operating standards are applied to the site through additional or revised permit conditions as necessary to mitigate identifiable environmental impacts. (Ord. 15032 § 28, 2004: Ord. 11157 § 21, 1993: Ord. 10870 § 443, 1993).

21A.22.060 Site design standards. Except as otherwise provided for nonconforming mineral extraction operations in K.C.C. 21A.22.040, in addition to requirements in this title, all mineral extraction and materials processing operations shall comply with the following standards:

A. The minimum site area of a mineral extraction or materials processing operation shall be ten acres;

B. Mineral extraction or materials processing operations on sites larger than twenty acres shall occur in phases to minimize environmental impacts. The size of each phase shall be determined during the review process;

C. If the department determines they are necessary to eliminate a safety hazard, fences or alternatives to fences approved by the department, shall be:

1. Provided in a manner that discourages access to areas of the site where:

a. active extracting, processing, stockpiling and loading of materials is occurring;

b. boundaries are in common with residential or commercial zone property or public lands; or

c. any unstable slope or any slope exceeding a grade of forty percent is present;

2. At least six feet in height above the grade measured at a point five feet outside the fence and the fence material shall have no opening larger than two inches;

3. Installed with lockable gates at all openings or entrances;

4. No more than four inches from the ground to fence bottom; and

5. Maintained in good repair;

D. Warning and trespass signs advising of the mineral extraction or materials processing operation shall be placed on the perimeter of the site adjacent to RA, UR or R zones at intervals no greater than two hundred feet along any unfenced portion of the site where the items noted in subsection C.1.a. through c. of this section are present;

E. Structural setbacks from property lines shall be as follows:

1. Buildings, structures and stockpiles used in the processing of materials shall be no closer than:

a. one hundred feet from any residential zoned properties except that the setback may be reduced to fifty feet when the grade where such building or structures are proposed is fifty feet or greater below the grade of the residential zoned property;

b. fifty feet from any other zoned property, except when adjacent to another mineral extraction or materials processing site;

c. the greater of fifty feet from the edge of any public street or the setback from residential zoned property on the far side of the street; and

2. Offices, scale facilities, equipment storage buildings and stockpiles, including those for reclamation, shall not be closer than fifty feet from any property line except when adjacent to another mineral extraction or materials processing site or M or F zoned property. Facilities necessary to control access to the site, when demonstrated to have no practical alternative, may be located closer to the property line;

F. On-site clearing, grading or excavation, excluding that necessary for required access, roadway or storm drainage facility construction or activities in accordance with an approved reclamation plan, shall not be permitted within fifty feet of any property line except along any portion of the perimeter adjacent to another mineral extraction or materials processing operation or M or F zoned property. If native vegetation is restored, temporary disturbance resulting from construction of noise attenuation features located closer than fifty feet shall be permitted;

G. Landscaping consistent with type 1 screening K.C.C. chapter 21A.16, except using only plantings native to the surrounding area, shall be provided along any portion of the site perimeter where disturbances such as site clearing and grading, or mineral extraction or materials processing is performed, except where adjacent to another mineral extraction, materials processing or forestry operation or M or F-zoned property;

H. Relevant clearing and grading operating standards from K.C.C. chapter 16.82 shall be applied; and

I. Lighting shall:

1. Be limited to that required for security, lighting of structures and equipment, and vehicle operations; and

2. Not directly glare onto surrounding properties. (Ord. 15032 § 29, 2004: Ord. 11621 § 67, 1994: 11157 § 22, 1993: Ord. 10870 § 444, 1993).

21A.22.070 Operating conditions and performance standards. Operating conditions and performance standards shall be as specified in K.C.C. chapter 16.82 except:

A.1. Noise levels produced by a mineral extraction or materials processing operation shall not exceed levels specified by K.C.C. chapter 12.86;

2. Hours of operation for mineral extraction and materials processing facilities, unless otherwise specified by the director, shall be between 7:00 a.m. and 7:00 p.m. Monday through Saturday and between 10:00 a.m. and 5:00 p.m. Sunday and holidays;

3. Before approving any variation of the hours of operation, the department shall:

a. determine whether on-site operations can comply with nighttime noise standards in accordance with K.C.C. 12.86.110, and K.C.C. 12.86.120;

b. determine whether the variance would cause significant adverse noise impacts to the community in accordance with standards and methodologies developed by the Federal Transit Administration, Federal Highway Administration or World Health Organization, or any combination thereof, for evaluating noise impacts, or other comparable standards and methods; and

c. require mitigation for any identified impacts before the department approves a variation in the hours of operation; and

4. The director's decision to approve a variation in the hours of operation shall be in writing and shall include a specific finding of compliance with the noise standards, the facts and conclusions supporting that finding and any mitigation, conditions or limitations imposed. All decisions made under this subsection shall be compiled by the department and made available for public inspection;

B. Blasting shall be conducted under an approved blasting plan:

1. Consistent with the methods specified in the Office of Surface Mining Enforcement and Reclamation 1987 Blasting Guidance Manual in a manner that protects from damage all structures, excluding those owned and directly used by the operator, and persons in the vicinity of the blasting area, including, but not limited to, adherence to the following:

a. Airblast levels shall not exceed one hundred thirty-three decibels measured by a two Hz or lower flat response system at the nearest residential property or place of public assembly;

b. Flyrock shall not be cast one-half the distance to the nearest residential property, place of public assembly or the property boundary, whichever is less. For the purposes of this subsection B.1.b., "property boundary" means an imaginary line exterior to any enclosed structure, at ground surface, which separates the property of one or more persons from that owned by others, and its vertical extension; and

c. Ground motion shall not exceed ground vibration levels damaging to structures using one of the four accepted methods in the Office of Surface Mining Enforcement and Reclamation 1987 Blasting Guidance Manual;

2. During daylight hours; and

3. According to a time schedule, provided to residents within one-half mile of the site, that features regular or predictable times, except in the case of an emergency. If requested by a resident, the operator shall provide notice of changes in the time schedule at least twenty four hours before the changes take effect;

C.1. Dust and smoke produced by mineral extraction and materials processing operations shall be controlled by best management practices to comply with relevant regulations of the Puget Sound Clean Air Agency.

2. Dust and smoke from process facilities shall be controlled in accordance with a valid operating permit from the Puget Sound Clean Air Agency. Copies of the permit shall be kept onsite and available for department and public inspection. Copies of the Puget Sound Clean Air Agency monitoring results shall be provided to the department on permit monitoring data submittal dates.

3. Dust and smoke from process facilities shall not significantly increase the existing levels of suspended particulates at the perimeter of the site;

D. The applicant shall prevent rocks, dirt, mud and any raw or processed material from spilling from or being tracked by trucks onto public roadways and shall be responsible for cleaning debris or repairing damage to roadways caused by the operation;

E. The applicant shall provide traffic control measures such as flaggers or warning signs as determined by the department during all hours of operation;

F. The operator shall control surface water and site discharges to comply with K.C.C. chapter 9.04 and the surface water design manual and K.C.C. chapter 9.12 and the stormwater pollution prevention manual. For the life of the mineral resource operation and until site reclamation is complete, the operator shall maintain a valid Washington state Department of Ecology National Pollutant Discharge Elimination System individual permit or maintain coverage under the sand and gravel general permit. The operator shall keep onsite and available for department review copies of the erosion and sediment control plan, the applicable National Pollution Discharge Elimination System individual or general permit and the Stormwater Pollution Prevention Plan. The operator shall make the plans and permit available for public inspection upon request. The operator shall provide to the department copies of the monitoring results on permit monitoring data submittal dates. The department shall make the monitoring results available for public inspection. If the department determines that National Pollution Discharge Elimination System monitoring frequency or type is not adequate to meet the demands of the site and the requirements of this subsection, the department may require more frequent and detailed monitoring and may require a program designed to bring the site into compliance;

G. The operator shall not excavate below the contours determined through hydrologic studies necessary to protect groundwater and the upper surface of the saturated groundwater that could be used for potable water supply;

H. If contamination of surface or ground water by herbicides is possible, to the maximum extent practicable, mechanical means shall be used to control noxious weeds on the site;

I. Upon depletion of mineral resources or abandonment of the site, the operator shall remove all structures, equipment and appurtenances accessory to operations; and

J. If the operator fail to comply with this section, the department shall require modifications to operations, procedures or equipment until compliance is demonstrated to the satisfaction of the department. If the modifications are inconsistent with the approved permit conditions, the department shall revise the permit accordingly. (Ord. 18000 § 103, 2015: Ord. 15032 § 30, 2004: Ord. 11621 § 68, 1994: Ord. 10870 § 445, 1993).

21A.22.081 Reclamation

A. A valid clearing and grading permit shall be maintained on a mineral extraction site until the reclamation of the site required under chapter 78.44 RCW is completed.

B. A reclamation plan approved in accordance with chapter 78.44 RCW shall be submitted before the effective date of a zone reclassification in Mineral-zoned properties or the acceptance of any development proposal for a subsequent use in Forest-zoned properties. The zone reclassification shall grant potential zoning that is only to be actualized, under K.C.C. chapter 20.24, upon demonstration of successful completion of all requirements of the reclamation plan. Development proposals in the Forest zone for uses subsequent to mineral extraction operations shall not be approved until demonstration of successful completion of all requirements of the reclamation plan except that forestry activities may be permitted on portions of the site already fully reclaimed.

C. Mineral extraction operations that are not required to have an approved reclamation plan under chapter 78.44 RCW shall meet the following requirements:

1. Upon the exhaustion of minerals or materials or upon the permanent abandonment of the quarrying or mining operation, all nonconforming buildings,

structures, apparatus or appurtenances accessory to the quarrying and mining operation shall be removed or otherwise dismantled to the satisfaction of the director;

2. Final grades shall:

a. be such so as to encourage the uses permitted within the primarily surrounding zone or, if applicable, the underlying or potential zone classification; and

b. result in drainage patterns that reestablish natural conditions of water velocity, volume, and turbidity within six months of reclamation and that precludes water from collecting or becoming stagnant. Suitable drainage systems approved by the department shall be constructed or installed where natural drainage conditions are not possible or where necessary to control erosion. All constructed drainage systems shall be designed consistent with the Surface Water Design Manual;

3. All areas subject to grading or backfilling shall:

a. incorporate only nonnoxious, nonflammable, noncombustible and nunputrescible solids; and

b. except for roads and areas incorporated into drainage facilities, be surfaced with soil of a quality at least equal to the topsoil of the land areas immediately surrounding, and to a depth of the topsoil of land area immediately surrounding six inches, whichever is greater. The topsoil layer shall have an organic matter content of eight to thirteen percent and a pH of 6.0 to 8.0 or matching the pH of the original undisturbed soil layer. Compacted areas such as pit floors or compacted fill shall be tilled or scarified prior to topsoil placement;

4. All reclaimed slopes shall comprise an irregular sinuous appearance in both profile and plan view and blend with adjacent topography to a reasonable extent;

5. Where excavation has penetrated the seasonal or permanent water table creating a water body or wetland:

a. All side slopes below the permanent water table and banks shall be graded or shaped as to not constitute a safety hazard;

b. Natural features and plantings to provide beneficial wetland functions and promote wildlife habitat shall be provided; and

c. Appropriate drainage controls shall be provided to stabilize the water level and not create potential flooding hazards;

6. All cleared, graded or backfilled areas, including areas surfaced with topsoil, shall be planted with a variety of trees, shrubs, legumes and grasses indigenous to the surrounding area and appropriate for the soil, moisture and exposure conditions;

7. Waste or soil piles shall be used for grading, backfilling or surfacing if permissible under this section, then covered with topsoil and planted in accordance with subsection C.3. and 6. of this section. Waste or soil piles not acceptable to be used for fill in accordance with this chapter or as top soil in accordance with subsection C.3. of this section shall be removed from the site; and

8. Where excavation has exposed natural materials that may create polluting conditions, including but not limited to acid-forming coals and metalliferous rock or soil, such conditions shall be addressed to the satisfaction of the department. The final ground surface shall be graded so that surface water drains away from any such materials remaining on the site.

D. The department may modify any requirement of this section when not applicable or if it conflicts with an approved subsequent use for the site. (Ord. 15032 § 32, 2004; Ord. 14199 § 223, 2001: Ord. 3108 § 9, 1977: Ord. 1488 § 12, 1973. Formerly 16.82.110).

21A.22.085 Mitigation and monitoring. The applicant shall mitigate adverse impacts resulting from the extraction or processing operations and monitor to demonstrate compliance with this chapter. (Ord. 15032 § 34, 2004).

21A.22.090 Financial guarantees. Financial guarantees shall be required consistent with K.C.C. Title 27A. (Ord. 15032 § 35, 2004: Ord. 12020 § 53, 1995: Ord. 11157 § 24, 1993: Ord. 10870 § 447, 1993).

21A.24 CRITICAL AREAS (Formerly Environmentally Sensitive Areas)

Sections:

21A.24.010 Purpose.
21A.24.020 Applicability.
21A.24.030 Appeals.
21A.24.040 Rules.
21A.24.045 Allowed alterations.
21A.24.051 Agricultural activities development standard.
21A.24.055 Rural stewardship plans.
21A.24.061 Public rules for rural stewardship and farm management plans.
21A.24.065 Basin and Shoreline Conditions Map.
21A.24.070 Alteration exception.
21A.24.072 Alteration exception-alternative.
21A.24.090 Disclosure by applicant.
21A.24.100 Critical area review.
21A.24.110 Critical area report requirement.
21A.24.125 Avoiding impacts to critical areas.
21A.24.130 Mitigation and monitoring.
21A.24.133 Off-site mitigation.
21A.24.137 Approval of mitigation through mitigation reserves program.
21A.24.140 Financial guarantees.
21A.24.160 Critical area markers and signs.
21A.24.170 Notice of critical areas.
21A.24.180 Critical area tracts and designations on site plans.
21A.24.185 Vegetation management plans.
21A.24.200 Building setbacks.
21A.24.205 Coal mine hazard areas — classifications.
21A.24.210 Coal mine hazard areas — development standards and alterations.
21A.24.220 Erosion hazard areas — development standards and alterations.
21A.24.230 Flood hazard areas — components.
21A.24.240 Zero-rise flood fringe — development standards and alterations.
21A.24.250 Zero-rise floodway — development standards and alterations.
21A.24.260 FEMA floodway — development standards and alterations.
21A.24.270 Flood hazard areas — certification by land surveyor
21A.24.2705 Flood hazard areas - appeals of actions alleging alterations without permits.
21A.24.271 Floodplain development permit.
21A.24.272 Coastal high hazard areas - development standards - exceptions to flood hazard standards.
21A.24.274 Channel migration - adoption of criteria, studies and maps - study delineating channel migration zone and component channel migration hazard areas.
21A.24.275 Channel migration zones — development standards and alterations.
21A.24.280 Landslide hazard areas — development standards and alterations.
21A.24.290 Seismic hazard areas — development standards and alterations.
21A.24.300 Volcanic hazard areas — development standards and alterations.

21A.24.310 Steep slope hazard areas — development standards and alterations.
21A.24.311 Critical aquifer recharge areas — maps adopted.
21A.24.312 Critical aquifer recharge areas — reclassification or declassification.
21A.24.313 Critical aquifer recharge areas — categories.
21A.24.314 Critical aquifer recharge areas — King County Code provisions adopted — Washington state underground tank provisions implemented.
21A.24.315 Board of Health regulations adopted.
21A.24.316 Critical aquifer recharge areas — development standards.
21A.24.318 Wetlands — categories.
21A.24.325 Wetlands — buffers.
21A.24.335 Wetlands — development standards and alterations.
21A.24.340 Wetlands — specific mitigation requirements.
21A.24.342 Wetlands — agreement to modify mitigation ratios.
21A.24.345 Specific mitigation requirements — wetland mitigation banking.
21A.24.355 Aquatic areas — water types.
21A.24.358 Aquatic areas — buffers.
21A.24.365 Aquatic areas — development standards and alterations.
21A.24.380 Aquatic areas — specific mitigation requirements.
21A.24.381 Aquatic habitat restoration project approval.
21A.24.382 Wildlife habitat conservation areas — development standards.
21A.24.383 Wildlife habitat conservation areas — modification.
21A.24.385 Wildlife habitat networks — applicability.
21A.24.386 Wildlife habitat networks — development standards and alterations.
21A.24.388 Wildlife habitat conservation areas and wildlife networks — specific mitigation requirements.
21A.24.500 Critical area designation.
21A.24.510 Septic system design and critical area designation.
21A.24.515 Critical areas monitoring.
21A.24.520 Buffer modifications to achieve zoned density.
21A.24.530 Vesting period for lots in final short plats.
21A.24.540 Reliance upon standards established through critical area review of a previously approved conditional use permit.
21A.24.550 Consolidated site review for single-family residential development.
21A.24.560 Vesting of an approved on-site sewage disposal system.

21A.24.010 Purpose. The purpose of this chapter is to implement the goals and policies of the Growth Management Act, chapter 3670A RCW, Washington state Environmental Policy Act, chapter 43.21C RCW, and the King County Comprehensive Plan, which call for protection of the natural environment and the public health and safety by:

A. Establishing development and alteration standards to protect functions and values of critical areas;

B. Protecting members of the general public and public resources and facilities from injury, loss of life, property damage or financial loss due to flooding, erosion, avalanche, landslides, seismic and volcanic events, soil subsidence or steep slope failures;

C. Protecting unique, fragile and valuable elements of the environment including, but not limited to, fish and wildlife and their habitats, and maintaining and promoting countywide native biodiversity;

D. Requiring mitigation of unavoidable impacts to critical areas, by regulating alterations in or near critical areas;

E. Preventing cumulative adverse environmental impacts on water availability, water quality, ground water, wetlands and aquatic areas;

F. Measuring the quantity and quality of wetland and aquatic area resources and preventing overall net loss of wetland and aquatic area functions;

G. Protecting the public trust as to navigable waters, aquatic resources, and fish and wildlife and their habitat;

H. Meeting the requirements of the National Flood Insurance Program and maintaining King County as an eligible community for federal flood insurance benefits;

I. Alerting members of the public including, but not limited to, appraisers, owners, potential buyers or lessees to the development limitations of critical areas; and

J. Providing county officials with sufficient information to protect critical areas. (Ord. 15051 § 131, 2004: Ord. 11621 § 69, 1994: 10870 § 448, 1993).

21A.24.020 Applicability.

A. This chapter applies to all land uses in King County, and all persons within the county shall comply with this chapter.

B. King County shall not approve any permit or otherwise issue any authorization to alter the condition of any land, water or vegetation or to construct or alter any structure or improvement without first ensuring compliance with this chapter.

C. Approval of a development proposal in accordance with this chapter does not discharge the obligation of the applicant to comply with this chapter.

D. When any other chapter of the King County Code conflicts with this chapter or when the provisions of this chapter are in conflict, the provision that provides more protection to environmentally critical areas apply unless specifically provided otherwise in this chapter or unless the provision conflicts with federal or state laws or regulations.

E. This chapter applies to all forest practices over which the county has jurisdiction under chapter 76.09 RCW and Title 222 WAC. (Ord. 15051 § 132, 2004: Ord. 10870 § 449, 1993).

21A.24.030 Appeals. An applicant may appeal a decision to approve, condition or deny a development proposal based on K.C.C. chapter 21A.24 according to and as part of the appeal procedure for the permit or approval involved as provided in K.C.C. 20.20.020. (Ord. 15051 § 133, 2004: Ord. 10870 § 450, 1993).

21A.24.040 Rules. Applicable departments within King County are authorized to adopt, in accordance with K.C.C. chapter 2.98, such public rules and regulations as are necessary and appropriate to implement K.C.C. chapter 21A.24 and to prepare and require the use of such forms as are necessary to its administration. (Ord. 15051 § 134, 2004: Ord. 10870 § 451, 1993).

21A.24.045 Allowed alterations.

A. Within the following seven critical areas and their buffers all alterations are allowed if the alteration complies with the development standards, impact avoidance and mitigation requirements and other applicable requirements established in this chapter:

1. Critical aquifer recharge area;
2. Coal mine hazard area;
3. Erosion hazard area;
4. Flood hazard area except in the severe channel migration hazard area;
5. Landslide hazard area under forty percent slope;
6. Seismic hazard area; and
7. Volcanic hazard areas.

B. Within the following seven critical areas and their buffers, unless allowed as an alteration exception under K.C.C. 21A.24.070, only the alterations on the table in subsection C. of this section are allowed if the alteration complies with conditions in subsection D. of this section and the development standards, impact avoidance and mitigation requirements and other applicable requirements established in this chapter:

1. Severe channel migration hazard area;
2. Landslide hazard area over forty percent slope;
3. Steep slope hazard area;
4. Wetland;
5. Aquatic area;
6. Wildlife habitat conservation area; and
7. Wildlife habitat network.

C. In the following table where an activity is included in more than one activity category, the numbered conditions applicable to the most specific description of the activity governs. Where more than one numbered condition appears for a listed activity, each of the relevant conditions specified for that activity within the given critical area applies. For alterations involving more than one critical area, compliance with the conditions applicable to each critical area is required.

KEY
Letter "A" in a cell means alteration is allowed

A number in a cell means the corresponding numbered condition in subsection D. of this section applies

"Wildlife area and network" column applies to both Wildlife Habitat Conservation Area and Wildlife Habitat Network

ACTIVITY	LANDSLIDE HAZARD OVER 40% AND BUFFER	STEEP SLOPE HAZARD AND BUFFER	WETLAND AND BUFFER	AQUATIC AREA AND BUFFER	CHANNEL MIGRATION SEVERE AND	WILDLIFE AREA AND NETWORK
Structures						
Construction of new single detached dwelling unit			A 1	A 2		
Construction of a new tree-supported structure			A 64	A 64		A 64
Construction of nonresidential structure			A 3	A 3		A 3, 4
Maintenance or repair of existing structure	A 5	A	A	A		A 4
Expansion or replacement of existing structure	A 5, 7	A 5, 7	A 7, 8	A 6, 7, 8		A 4, 7
Interior remodeling	A	A	A	A		A
Construction of new dock or pier			A 9	A 9, 10, 11		
Maintenance, repair or replacement of dock or pier			A 12	A 10, 11		A 4
Grading						
Grading		A 13		A 14		A 4, 14
Construction of new slope stabilization	A 15	A 15	A 15	A 15		A 4, 15
Maintenance of existing slope stabilization	A 16	A 13	A 17	A 16, 17		A 4
Mineral extraction	A	A				
Clearing						
Clearing	A 18	A 18	A 18, 20	A 14, 18, 20		A 4, 14, 18, 20
Cutting firewood		A 21	A 21	A 21		A 4, 21
Vegetation management	A 19	A 19	A 19	A 19		A 4, 19
Removal of vegetation for fire safety	A 22	A 22	A 22	A 22		A 4, 22
Removal of noxious weeds or invasive vegetation	A 23	A 23	A 23	A 23		A 4, 23

Forest Practices					
Forest management activity	A	A	A	A	A 25
Roads					
Construction of new public road right-of-way structure on unimproved right-of-way			A 26	A 26	
Construction of new road in a plat			A 26	A 26	
Maintenance of public road right-of-way structure	A 16	A 16	A 16	A 16	A 16, 27
Expansion beyond public road right-of way structure	A	A	A 26	A 26	
Repair, replacement or modification within the roadway	A 16	A 16	A 16	A 16	A 16, 27
Construction of driveway or private access road	A 28	A 28	A 28	A 28	A 28
Construction of farm field access drive	A 29	A 29	A 29	A 29	A 29
Maintenance of driveway, private access road, farm field access drive or parking lot	A	A	A 17	A 17	A 17, 27
Construction of a bridge or culvert as part of a driveway or private access road	A 39	A 39	A 39	A 39	A 39
Bridges or culverts					
Maintenance or repair of bridge or culvert	A 16, 17	A 16, 17	A 16, 17	A 16, 17	A 16, 17, 27
Construction of a new bridge	A 16, 39	A 16, 39	A 16, 39	A16, 39	A 4, 16, 39
Replacement of bridge or culvert	A 16	A 16	A 16	A 16, 30	A 16, 27
Expansion of bridge or culvert	A 16, 17	A 16, 17	A 16, 17, 31	A 17, 31	A 4
Utilities and other infrastructure					
Construction of new utility corridor or utility facility	A 32, 33	A 32, 33	A 32, 34	A 32, 34	A 27, 32, 35
Construction or maintenance of a hydroelectric generating facility	A 67	A 67	A 66	A 66	A 4, 66
Construction of a new residential utility service distribution line	A 32, 33	A 32, 33	A 32, 60	A 32, 60	A 27, 32, 60
Maintenance, repair or replacement of utility corridor or utility facility	A 32, 33	A 32, 33	A 32, 34, 36	A 32, 34, 36	A 4, 32, 37
Construction of a new on-site sewage disposal system or well	A 24	A 24	A 63	A 63	
Maintenance or repair of existing well	A 37	A 37	A 37	A 37	A 4, 37
Maintenance or repair of on-site sewage disposal system	A	A	A	A 37	A 4
Construction of new surface water conveyance system	A 32, 33	A 32, 33	A 32, 38	A 32, 38	A 4
Construction, maintenance or repair of in-water heat exchanger			A 68	A 68	
Maintenance, repair or replacement of existing surface water conveyance system	A 33	A 33	A 16, 32, 38	A 16, 40, 41	A 4, 37
Construction of new surface water flow control or surface water quality treatment facility			A 32	A 32	A 4, 32
Maintenance or repair of existing surface water flow control or surface water quality treatment facility	A 16	A 16	A 16	A 16	A 4
Construction of new flood protection facility			A 42	A 42	A 27, 42
Maintenance, repair or replacement of flood protection facility	A 33, 43	A 33, 43	A 43	A 43	A 27, 43
Flood risk reduction gravel removal	A 61	A 61	A 61	A 61	A 61
Construction of new instream structure or instream work	A 16	A 16	A 16	A 16, 44, 45	A 4, 16, 44, 45
Maintenance or repair of existing instream structure	A 16	A	A	A	A 4
Recreation					
Construction of new trail	A 46	A 46	A 47	A 47	A 4, 47
Maintenance of outdoor public park facility, trail or publicly improved recreation area	A 48	A 48	A 48	A 48	A 4, 48
Habitat, education and science projects					
Habitat restoration or enhancement project	A 49	A 49	A 49	A 49	A 4, 49
Scientific sampling for salmonids			A 50	A 50	A 50
Drilling and testing for critical areas report	A 51	A 51	A 51, 52	A 51, 52	A 4
Environmental education project	A 62	A 62	A 62	A 62	A 62
Agriculture					

Horticulture activity including tilling, discing, planting, seeding, harvesting, preparing soil, rotating crops and related activity	A 53	A 53	A 53, 54	A 53, 54	A 53, 54
Grazing livestock	A 53	A 53	A 53, 54	A 53, 54	A 53, 54
Construction or maintenance of a commercial fish farm			A 53, 54	A 53, 54	A 53, 54
Construction or maintenance of livestock manure storage facility			A 53, 54, 55	A 53, 54, 55, 56	A 53, 54
Construction of a livestock heavy use area			A 53, 54, 55	A 53, 54, 55, 56	A 53, 54
Construction or maintenance of a farm pad			A 56	A 56	
Construction of agricultural drainage			A 57	A 57	A 4, 57
Maintenance or replacement of agricultural drainage	A 23, 58	A 23, 58	A 23, 53, 54, 58	A 23, 53, 54, 58	A 4, 23, 53, 54, 58
Maintenance of agricultural waterway			A 69	A 69	
Construction or maintenance of farm pond, fish pond or livestock watering pond	A 53	A 53	A 53, 54	A 53, 54	A 53, 54
Other					
Shoreline water dependent or shoreline water oriented use				A 65	
Excavation of cemetery graves in established and approved cemetery	A	A	A	A	A
Maintenance of cemetery graves	A	A	A	A	A
Maintenance of lawn, landscaping or garden for personal consumption	A 59	A 59	A 59	A 59	A 59
Maintenance of golf course	A 17	A 17	A 17	A 17	A 4, 17

D. The following alteration conditions apply:

1. Limited to farm residences in grazed or tilled wet meadows and subject to the limitations of subsection D.3. of this section.

2. Only allowed in a buffer of a lake that is twenty acres or larger on a lot that was created before January 1, 2005, if:

a. at least seventy-five percent of the lots abutting the shoreline of the lake or seventy-five percent of the lake frontage, whichever constitutes the most developable lake frontage, has existing density of four dwelling units per acre or more;

b. the development proposal, including mitigation required by this chapter, will have the least adverse impact on the critical area;

c. existing native vegetation within the critical area buffer will remain undisturbed except as necessary to accommodate the development proposal and required building setbacks;

d. access is located to have the least adverse impact on the critical area and critical area buffer;

e. the alteration is the minimum necessary to accommodate the development proposal and in no case in excess of a development footprint of five thousand square feet;

f. the alteration is no closer than:

(1) on site with a shoreline environment designation of high intensity or residential, the greater of twenty-five feet or the average of the setbacks on adjacent lots on either side of the subject property, as measured from the ordinary high water mark of the lake shoreline;

(2) on a site with a shoreline environment designation of rural, conservancy, resource or forestry, the greater of fifty feet or the average of the setbacks on adjacent lots on either side of the subject property, as measured from the ordinary high water mark the lake shoreline; and

(3) on a site with a shoreline environment designation of natural, the greater of one hundred feet or the average of the setbacks on adjacent lots on either side of the subject property, as measured from the ordinary high water mark; and

g. to the maximum extent practical, alterations are mitigated on the development proposal site by enhancing or restoring remaining critical area buffers.

3. Limited to nonresidential farm-structures in grazed or tilled wet meadows or buffers of wetlands or aquatic areas where:

a. the site is predominantly used for the practice of agriculture;

b. the structure is in compliance with an approved farm management plan in accordance with K.C.C. 21A.24.051;

c. the structure is either:

(1) on or adjacent to existing nonresidential impervious surface areas, additional impervious surface area is not created waterward of any existing impervious surface areas and the area was not used for crop production;

(2) higher in elevation and no closer to the critical area than its existing position; or

(3) at a location away from existing impervious surface areas that is determined to be the optimum site in the farm management plan;

d. all best management practices associated with the structure specified in the farm management plan are installed and maintained;

e. installation of fencing in accordance with K.C.C. chapter 21A.30 does not require the development of a farm management plan if required best management practices are followed and the installation does not require clearing of critical areas or their buffers; and

f. in a severe channel migration hazard area portion of an aquatic buffer only if:

(1) there is no feasible alternative location on-site;

(2) the structure is located where it is least subject to risk from channel migration;

(3) the structure is not used to house animals or store hazardous substances; and

(4) the total footprint of all accessory structures within the severe channel migration hazard area will not exceed the greater of one thousand square feet or two percent of the severe channel migration hazard area on the site.

4. No clearing, external construction or other disturbance in a wildlife habitat conservation area is allowed during breeding seasons established under K.C.C. 21A.24.382.

5. Allowed for structures when:

a. the landslide hazard poses little or no risk of injury;

b. the risk of landsliding is low; and

c. there is not an expansion of the structure.

6. Within a severe channel migration hazard area allowed for:

a. existing legally established primary structures if:

(1) there is not an increase of the footprint of any existing structure; and

(2) there is not a substantial improvement as defined in K.C.C. 21A.06.1270; and

b. existing legally established accessory structures if:

(1) additions to the footprint will not make the total footprint of all existing structures more than one-thousand square feet; and

(2) there is not an expansion of the footprint towards any source of channel migration hazard, unless the applicant demonstrates that the location is less subject to risk and has less impact on the critical area.

7. Allowed only in grazed wet meadows or the buffer or building setback outside a severe channel migration hazard area if:

a. the expansion or replacement does not increase the footprint of a nonresidential structure;

b.(1) for a legally established dwelling unit, the expansion or replacement, including any expansion of a legally established accessory structure allowed under this

subsection B.7.b., does not increase the footprint of the dwelling unit and all other structures by more than one thousand square feet, not including any expansion of a drainfield made necessary by the expansion of the dwelling unit. To the maximum extent practical, the replacement or expansion of a drainfield in the buffer should be located within areas of existing lawn or landscaping, unless another location will have a lesser impact on the critical area and its buffer;

(2) for a structure accessory to a dwelling unit, the expansion or replacement is located on or adjacent to existing impervious surface areas and does not result in a cumulative increase in the footprint of the accessory structure and the dwelling unit by more than one thousand square feet;

(3) the location of the expansion has the least adverse impact on the critical area; and

(4) a comparable area of degraded buffer area shall be enhanced through removal of nonnative plants and replacement with native vegetation in accordance with an approved landscaping plan;

c. the structure was not established as the result of an alteration exception, variance, buffer averaging or reasonable use exception;

d. to the maximum extent practical, the expansion or replacement is not located closer to the critical area or within the relic of a channel that can be connected to an aquatic area; and

e. The expansion of a residential structure in the buffer of a Type S aquatic area that extends towards the ordinary high water mark requires a shoreline variance if:

(1) the expansion is within thirty-five feet of the ordinary high water mark; or

(2) the expansion is between thirty-five and fifty feet of the ordinary high water mark and the area of the expansion extending towards the ordinary high water mark is greater than three hundred square feet.

8. Allowed upon another portion of an existing impervious surface outside a severe channel migration hazard area if:

a. except as otherwise allowed under subsection D.7. of this section, the structure is not located closer to the critical area;

b. except as otherwise allowed under subsection D.7. of this section, the existing impervious surface within the critical area or buffer is not expanded; and

c. the degraded buffer area is enhanced through removal of nonnative plants and replacement with native vegetation in accordance with an approved landscaping plan.

9. Limited to piers or seasonal floating docks in a category II, III or IV wetland or its buffer or along a lake shoreline or its buffer where:

a. the vegetation where the alteration is proposed does not consist of dominant native wetland herbaceous or woody vegetation six feet in width or greater and the lack of this vegetation is not the result of any violation of law;

b. the wetland or lake shoreline is not a salmonid spawning area;

c. hazardous substances or toxic materials are not used; and

d. if located in a freshwater lake, the pier or dock conforms to the standards for docks under K.C.C. 21A.25.180.

10. Allowed on type N or O aquatic areas if hazardous substances or toxic materials are not used.

11. Allowed on type S or F aquatic areas outside of the severe channel migration hazard area if in compliance with K.C.C. 21A.25.180.

12. When located on a lake, must be in compliance with K.C.C. 21A.25.180.

13. Limited to regrading and stabilizing of a slope formed as a result of a legal grading activity.

14. The following are allowed in the severe channel migration hazard area if conducted more than one hundred sixty-five feet from the ordinary high water mark in the rural area and one-hundred fifteen feet from the ordinary high water mark in the urban area:

a. grading of up to fifty cubic yards on lot less than five acres; and

b. clearing of up to one-thousand square feet or up to a cumulative thirty-five percent of the severe channel migration hazard area.

15. Only where erosion or landsliding threatens a structure, utility facility, roadway, driveway, public trails, aquatic area or wetland if, to the maximum extent practical, stabilization work does not disturb the slope and its vegetative cover and any associated critical areas.

16. Allowed when performed by, at the direction of or authorized by a government agency in accordance with regional road maintenance guidelines.

17. Allowed when not performed under the direction of a government agency only if:

a. the maintenance or expansion does not involve the use of herbicides, hazardous substances, sealants or other liquid oily substances in aquatic areas, wetlands or their buffers; and

b. when maintenance, expansion or replacement of bridges or culverts involves water used by salmonids:

(1) the work is in compliance with ditch standards in public rule; and

(2) the maintenance of culverts is limited to removal of sediment and debris from the culvert and its inlet, invert and outlet and the stabilization of the disturbed or damaged bank or channel immediately adjacent to the culvert and shall not involve the excavation of a new sediment trap adjacent to the inlet.

18. Allowed for the removal of hazard trees and vegetation as necessary for surveying or testing purposes.

19. The limited trimming, pruning or removal of vegetation under a vegetation management plan approved by the department:

a. in steep slope and landslide hazard areas, for the making and maintenance of view corridors; and

b. in all critical areas for habitat enhancement, invasive species control or forest management activities.

20. Harvesting of plants and plant materials, such as plugs, stakes, seeds or fruits, for restoration and enhancement projects is allowed.

21. Cutting of firewood is subject to the following:

a. within a wildlife habitat conservation area, cutting firewood is not allowed;

b. within a wildlife network, cutting shall be in accordance with a management plan approved under K.C.C. 21A.24.386; and

c. within a critical area buffer, cutting shall be for personal use and in accordance with an approved forest management plan or rural stewardship plan.

22. Allowed only in buffers if in accordance with best management practices approved by the King County fire marshal.

23. Allowed as follows:

a. if conducted in accordance with an approved forest management plan, farm management plan or rural stewardship plan; or

b. without an approved forest management plan, farm management plan or rural stewardship plan, only if:

(1) removal is undertaken with hand labor, including hand-held mechanical tools, unless the King County noxious weed control board otherwise prescribes the use of riding mowers, light mechanical cultivating equipment or herbicides or biological control methods;

(2) the area is stabilized to avoid regrowth or regeneration of noxious weeds;

(3) the cleared area is revegetated with native vegetation and stabilized against erosion; and

(4) herbicide use is in accordance with federal and state law;

24. Allowed to repair or replace existing on site wastewater disposal systems in accordance with the applicable public health standards within Marine Recovery Areas adopted by the Seattle King County board of health and:

a. there is no alternative location available with less impact on the critical area;

b. impacts to the critical area are minimized to the maximum extent practicable;

c. the alterations will not subject the critical area to increased risk of landslide or erosion;

d. vegetation removal is the minimum necessary to accommodate the septic system; and

e. significant risk of personal injury is eliminated or minimized in the landslide hazard area.

25. Only if in compliance with published Washington state Department of Fish and Wildlife and Washington state Department of Natural Resources Management standards for the species. If there are no published Washington state standards, only if in compliance with management standards determined by the county to be consistent with best available science.

26. Allowed only if:

a. there is not another feasible location with less adverse impact on the critical area and its buffer;

b. the corridor is not located over habitat used for salmonid rearing or spawning or by a species listed as endangered or threatened by the state or federal government unless the department determines that there is no other feasible crossing site.

c. the corridor width is minimized to the maximum extent practical;

d. the construction occurs during approved periods for instream work;

e. the corridor will not change or diminish the overall aquatic area flow peaks, duration or volume or the flood storage capacity; and

f. no new public right-of-way is established within a severe channel migration hazard area.

27. To the maximum extent practical, during breeding season established under K.C.C. 21A.24.382, land clearing machinery such as bulldozers, graders or other heavy equipment are not operated within a wildlife habitat conservation area.

28. Allowed only if:

a. an alternative access is not available;

b. impact to the critical area is minimized to the maximum extent practical including the use of walls to limit the amount of cut and fill necessary;

c. the risk associated with landslide and erosion is minimized;

d. access is located where it is least subject to risk from channel migration; and

e. construction occurs during approved periods for instream work.

29. Only if in compliance with a farm management plan in accordance with K.C.C. 21A.24.051.

30. Allowed only if:

a. the new construction or replacement is made fish passable in accordance with the most recent Washington state Department of Fish and Wildlife manuals or with the National Marine and Fisheries Services guidelines for federally listed salmonid species; and

b. the site is restored with appropriate native vegetation.

31. Allowed if necessary to bring the bridge or culvert up to current standards and if:

a. there is not another feasible alternative available with less impact on the aquatic area and its buffer; and

b. to the maximum extent practical, the bridge or culvert is located to minimize impacts to the aquatic area and its buffer's.

32. Allowed in an existing roadway if conducted consistent with the regional road maintenance guidelines.

33. Allowed outside the roadway if:

a. the alterations will not subject the critical area to an increased risk of landslide or erosion;

b. vegetation removal is the minimum necessary to locate the utility or construct the corridor; and

c. significant risk of personal injury is eliminated or minimized in the landslide hazard area.

34. Limited to the pipelines, cables, wires and support structures of utility facilities within utility corridors if:

a. there is no alternative location with less adverse impact on the critical area and critical area buffer;

b. new utility corridors meet the all of the following to the maximum extent practical:

(1) are not located over habitat used for salmonid rearing or spawning or by a species listed as endangered or threatened by the state or federal government unless the department determines that there is no other feasible crossing site;

(2) the mean annual flow rate is less than twenty cubic feet per second; and

(3) paralleling the channel or following a down-valley route near the channel is avoided;

c. to the maximum extent practical utility corridors are located so that:

(1) the width is the minimized;

(2) the removal of trees greater than twelve inches diameter at breast height is minimized;

(3) an additional, contiguous and undisturbed critical area buffer, equal in area to the disturbed critical area buffer area including any allowed maintenance roads, is provided to protect the critical area;

d. to the maximum extent practical, access for maintenance is at limited access points into the critical area buffer rather than by a parallel maintenance road. If a parallel maintenance road is necessary the following standards are met:

(1) to the maximum extent practical the width of the maintenance road is minimized and in no event greater than fifteen feet; and

(2) the location of the maintenance road is contiguous to the utility corridor on the side of the utility corridor farthest from the critical area;

e. the utility corridor or facility will not adversely impact the overall critical area hydrology or diminish flood storage capacity;

f. the construction occurs during approved periods for instream work;

g. the utility corridor serves multiple purposes and properties to the maximum extent practical;

h. bridges or other construction techniques that do not disturb the critical areas are used to the maximum extent practical;

i. bored, drilled or other trenchless crossing is laterally constructed at least four feet below the maximum depth of scour for the base flood;

j. bridge piers or abutments for bridge crossing are not placed within the FEMA floodway or the ordinary high water mark;

k. open trenching is only used during low flow periods or only within aquatic areas when they are dry. The department may approve open trenching of type S or F

aquatic areas only if there is not a feasible alternative and equivalent or greater environmental protection can be achieved; and

l. minor communication facilities may collocate on existing utility facilities if:

(1) no new transmission support structure is required; and

(2) equipment cabinets are located on the transmission support structure.

35. Allowed only for new utility facilities in existing utility corridors.

36. Allowed for onsite private individual utility service connections or private or public utilities if the disturbed area is not expanded and no hazardous substances, pesticides or fertilizers are applied.

37. Allowed if the disturbed area is not expanded, clearing is limited to the maximum extent practical and no hazardous substances, pesticides or fertilizers are applied.

38. Allowed if:

a. conveying the surface water into the wetland or aquatic area buffer and discharging into the wetland or aquatic area buffer or at the wetland or aquatic area edge has less adverse impact upon the wetland or aquatic area or wetland or aquatic area buffer than if the surface water were discharged at the buffer's edge and allowed to naturally drain through the buffer;

b. the volume of discharge is minimized through application of low impact development and water quality measures identified in the King County Surface Water Design Manual;

c. the conveyance and outfall are installed with hand equipment where feasible;

d. the outfall shall include bioengineering techniques where feasible; and

e. the outfall is designed to minimize adverse impacts to critical areas.

39. Allowed only if:

a. there is no feasible alternative with less impact on the critical area and its buffer;

b. to the maximum extent practical, the bridge or culvert is located to minimize impacts to the critical area and its buffer;

c. the bridge or culvert is not located over habitat used for salmonid rearing or spawning unless there is no other feasible crossing site;

d. construction occurs during approved periods for in-stream work; and

e. bridge piers or abutments for bridge crossings are not placed within the FEMA floodway, severe channel migration hazard area or waterward of the ordinary high water mark.

40. Allowed for an open, vegetated stormwater management conveyance system and outfall structure that simulates natural conditions if:

a. fish habitat features necessary for feeding, cover and reproduction are included when appropriate;

b. vegetation is maintained and added adjacent to all open channels and ponds, if necessary to prevent erosion, filter out sediments or shade the water; and

c. bioengineering techniques are used to the maximum extent practical.

41. Allowed for a closed, tightlined conveyance system and outfall structure if:

a. necessary to avoid erosion of slopes; and

b. bioengineering techniques are used to the maximum extent practical.

42. Allowed in a severe channel migration hazard area or an aquatic area buffer to prevent bank erosion only:

a. if consistent with the Integrated Streambank Protection Guidelines (Washington State Aquatic Habitat Guidelines Program, 2002) and if bioengineering techniques are used to the maximum extent practical, unless the applicant demonstrates that other methods provide equivalent structural stabilization and environmental function;

b. based on a critical areas report, the department determines that the new flood protection facility will not cause significant impacts to upstream or downstream properties; and

c. to prevent bank erosion for the protection of:

(1) public roadways;

(2) sole access routes in existence before February 16, 1995;

(3) new primary dwelling units, accessory dwelling units or accessory living quarters and residential accessory structures located outside the severe channel migration hazard area if:

(a) the site is adjacent to or abutted by properties on both sides containing buildings or sole access routes protected by legal bank stabilization in existence before February 16, 1995. The buildings, sole access routes or bank stabilization must be located no more than six hundred feet apart as measured parallel to the migrating channel; and

(b) the new primary dwelling units, accessory dwelling units, accessory living quarters or residential accessory structures are located no closer to the aquatic area than existing primary dwelling units, accessory dwelling units, accessory living quarters or residential accessory structures on abutting or adjacent properties; or

(4) existing primary dwelling units, accessory dwelling units, accessory living quarters or residential accessory structures if:

(a) the structure was in existence before the adoption date of a King County Channel Migration Zone hazard map that applies to that channel, if such a map exists;

(b) the structure is in imminent danger, as determined by a geologist, engineering geologist or geotechnical engineer;

(c) the applicant has demonstrated that the existing structure is at risk, and the structure and supporting infrastructure cannot be relocated on the lot further from the source of channel migration; and

(d) nonstructural measures are not feasible.

43. Applies to lawfully established existing structures if:

a. the height of the facility is not increased, unless the facility is being replaced in a new alignment that is landward of the previous alignment and enhances aquatic area habitat and process;

b. the linear length of the facility is not increased, unless the facility is being replaced in a new alignment that is landward of the previous alignment and enhances aquatic area habitat and process;

c. the footprint of the facility is not expanded waterward;

d. consistent with the Integrated Streambank Protection Guidelines (Washington State Aquatic Habitat Guidelines Program, 2002) and bioengineering techniques are used to the maximum extent practical;

e. the site is restored with appropriate native vegetation and erosion protection materials; and

f. based on a critical areas report, the department determines that the maintenance, repair, replacement or construction will not cause significant impacts to upstream or downstream properties.

44. Allowed in type N and O aquatic areas if done in least impacting way at least impacting time of year, in conformance with applicable best management practices, and all affected instream and buffer features are restored.

45. Allowed in a type S or F water when such work is:

a. included as part of a project to evaluate, restore or improve habitat, and

b. sponsored or cosponsored by a public agency that has natural resource management as a function or by a federally recognized tribe.

46. Allowed as long as the trail is not constructed of impervious surfaces that will contribute to surface water run-off, unless the construction is necessary for soil stabilization or soil erosion prevention or unless the trail system is specifically designed and intended to be accessible to handicapped persons.

47. Not allowed in a wildlife habitat conservation area. Otherwise, allowed in the buffer or for crossing a category II, III or IV wetland or a type F, N or O aquatic area, if:

a. the trail surface is made of pervious materials, except that public multipurpose trails may be made of impervious materials if they meet all the requirements in K.C.C. chapter 9.12. A trail that crosses a wetland or aquatic area shall be constructed as a raised boardwalk or bridge;

b. to the maximum extent practical, buffers are expanded equal to the width of the trail corridor including disturbed areas;

c. there is not another feasible location with less adverse impact on the critical area and its buffer;

d. the trail is not located over habitat used for salmonid rearing or spawning or by a species listed as endangered or threatened by the state or federal government unless the department determines that there is no other feasible crossing site;

e. the trail width is minimized to the maximum extent practical;

f. the construction occurs during approved periods for instream work; and

g. the trail corridor will not change or diminish the overall aquatic area flow peaks, duration or volume or the flood storage capacity.

h. the trail may be located across a critical area buffer for access to a viewing platform or to a permitted dock or pier;

i. A private viewing platform may be allowed if it is:

(1) located upland from the wetland edge or the ordinary high water mark of an aquatic area;

(2) located where it will not be detrimental to the functions of the wetland or aquatic area and will have the least adverse environmental impact on the critical area or its buffer;

(3) limited to fifty square feet in size;

(4) constructed of materials that are nontoxic; and

(5) on footings located outside of the wetland or aquatic area.

48. Only if the maintenance:

a. does not involve the use of herbicides or other hazardous substances except for the removal of noxious weeds or invasive vegetation;

b. when salmonids are present, the maintenance is in compliance with ditch standards in public rule; and

c. does not involve any expansion of the roadway, lawn, landscaping, ditch, culvert, engineered slope or other improved area being maintained.

49. Limited to alterations to restore habitat forming processes or directly restore habitat function and value, including access for construction, as follows:

a. projects sponsored or cosponsored by a public agency that has natural resource management as a primary function or by a federally recognized tribe;

b. restoration and enhancement plans prepared by a qualified biologist; or

c. conducted in accordance with an approved forest management plan, farm management plan or rural stewardship plan.

50. Allowed in accordance with a scientific sampling permit issued by Washington state Department of Fish and Wildlife or an incidental take permit issued under Section 10 of the Endangered Species Act.

51. Allowed for the minimal clearing and grading, including site access, necessary to prepare critical area reports.

52. The following are allowed if associated spoils are contained:

a. data collection and research if carried out to the maximum extent practical by nonmechanical or hand-held equipment;

b. survey monument placement;

c. site exploration and gage installation if performed in accordance with state-approved sampling protocols and accomplished to the maximum extent practical by hand-held equipment and; or similar work associated with an incidental take permit issued under Section 10 of the Endangered Species Act or consultation under Section 7 of the Endangered Species Act.

53. Limited to activities in continuous existence since January 1, 2005, with no expansion within the critical area or critical area buffer. "Continuous existence" includes cyclical operations and managed periods of soil restoration, enhancement or other fallow states associated with these horticultural and agricultural activities.

54. Allowed for expansion of existing or new agricultural activities where:

a. the site is predominantly involved in the practice of agriculture;

b. there is no expansion into an area that:

(1) has been cleared under a class I, II, III, IV-S or nonconversion IV-G forest practice permit; or

(2) is more than ten thousand square feet with tree cover at a uniform density more than ninety trees per acre and with the predominant mainstream diameter of the trees at least four inches diameter at breast height, not including areas that are actively managed as agricultural crops for pulpwood, Christmas trees or ornamental nursery stock;

c. the activities are in compliance with an approved farm management plan in accordance with K.C.C. 21A.24.051; and

d. all best management practices associated with the activities specified in the farm management plan are installed and maintained.

55. Only allowed in grazed or tilled wet meadows or their buffers if:

a. the facilities are designed to the standards of an approved farm management plan in accordance K.C.C. 21A.24.051 or an approved livestock management plan in accordance with K.C.C. chapter 21A.30;

b. there is not a feasible alternative location available on the site; and

c. the facilities are located close to the outside edge of the buffer to the maximum extent practical.

56. Only allowed in a severe channel migration hazard area located outside of the shorelines jurisdiction area, grazed or tilled wet meadow or wet meadow buffer or aquatic area buffer and only if:

a. the applicant demonstrates that adverse impacts to the critical area and critical area buffers have been minimized;

b. there is not another feasible location available on the site that is located outside of the critical area or critical area buffer; and

c. for proposals located in the severe channel migration hazard area, the farm pad or livestock manure storage facility is located where it is least subject to risk from channel migration.

57. Allowed for new agricultural drainage in compliance with an approved farm management plan in accordance with K.C.C. 21A.24.051 and all best management practices associated with the activities specified in the farm management plan are installed and maintained.

58. If the agricultural drainage is used by salmonids, maintenance shall be in compliance with an approved farm management plan in accordance with K.C.C. 21A.24.051.

59. Allowed within existing landscaped areas or other previously disturbed areas.

60. Allowed for residential utility service distribution lines to residential dwellings, including, but not limited to, well water conveyance, septic system conveyance, water service, sewer service, natural gas, electrical, cable and telephone, if:

a. there is no alternative location with less adverse impact on the critical area or the critical area buffer;

b. the residential utility service distribution lines meet the all of the following, to the maximum extent practical:

(1) are not located over habitat used for salmonid rearing or spawning or by a species listed as endangered or threatened by the state or federal government unless the department determines that there is no other feasible crossing site;

(2) not located over a type S aquatic area;

(3) paralleling the channel or following a down-valley route near the channel is avoided;

(4) the width of clearing is minimized;

(5) the removal of trees greater than twelve inches diameter at breast height is minimized;

(6) an additional, contiguous and undisturbed critical area buffer, equal in area to the disturbed critical area buffer area is provided to protect the critical area;

(7) access for maintenance is at limited access points into the critical area buffer.

(8) the construction occurs during approved periods for instream work;

(9) bored, drilled or other trenchless crossing is encouraged, and shall be laterally constructed at least four feet below the maximum depth of scour for the base flood; and

(10) open trenching across Type O or Type N aquatic areas is only used during low flow periods or only within aquatic areas when they are dry.

61. Allowed if sponsored or cosponsored by the countywide flood control zone district and the department determines that the project and its location:

a. is the best flood risk reduction alternative practicable;

b. is part of a comprehensive, long-term flood management strategy;

c. is consistent with the King County Flood Hazard Management Plan policies;

d. will have the least adverse impact on the ecological functions of the critical area or its buffer, including habitat for fish and wildlife that are identified for protection in the King County Comprehensive Plan; and

e. has been subject to public notice in accordance with K.C.C. 20.44.060.

62.a. Not allowed in wildlife habitat conservation areas;

b. Only allowed if:

(1) the project is sponsored or cosponsored by a public agency whose primary function deals with natural resources management;

(2) the project is located on public land or on land that is owned by a nonprofit agency whose primary function deals with natural resources management;

(3) there is not a feasible alternative location available on the site with less impact to the critical area or its associated buffer;

(4) the aquatic area or wetland is not for salmonid rearing or spawning;

(5) the project minimizes the footprint of structures and the number of access points to any critical areas; and

(6) the project meets the following design criteria:

(a) to the maximum extent practical size of platform shall not exceed one hundred square feet;

(b) all construction materials for any structures, including the platform, pilings, exterior and interior walls and roof, are constructed of nontoxic material, such as nontreated wood, vinyl-coated wood, nongalvanized steel, plastic, plastic wood, fiberglass

or cured concrete that the department determines will not have an adverse impact on water quality;

(c) the exterior of any structures are sufficiently camouflaged using netting or equivalent to avoid any visual deterrent for wildlife species to the maximum extent practical. The camouflage shall be maintained to retain concealment effectiveness;

(d) structures shall be located outside of the wetland or aquatic area landward of the Ordinary High Water Mark or open water component (if applicable) to the maximum extent practical on the site;

(e) construction occurs during approved periods for work inside the Ordinary High Water Mark;

(f) construction associated with bird blinds shall not occur from March 1 through August 31, in order to avoid disturbance to birds during the breeding, nesting and rearing seasons;

(g) to the maximum extent practical, provide accessibility for persons with physical disabilities in accordance with the International Building Code;

(h) trail access is designed in accordance with public rules adopted by the department;

(i) existing native vegetation within the critical area will remain undisturbed except as necessary to accommodate the proposal. Only minimal hand clearing of vegetation is allowed; and

(j) disturbed bare ground areas around the structure must be replanted with native vegetation approved by the department.

63. Not allowed in the severe channel migration zone, there is no alternative location with less adverse impact on the critical area and buffer and clearing is minimized to the maximum extent practical.

64. Only structures wholly or partially supported by a tree and used as accessory living quarters or for play and similar uses described in K.C.C. 16.02.240.1, subject to the following:

a. not allowed in wildlife habitat conservation areas or severe channel migration hazard areas;

b. the structure's floor area shall not exceed two hundred square feet, excluding a narrow access stairway or landing leading to the structure;

c. the structure shall be located as far from the critical area as practical, but in no case closer than seventy-five feet from the critical area;

d. only one tree-supported structure within a critical area buffer is allowed on a lot;

e. all construction materials for the structure, including the platform, pilings, exterior and interior walls and roof, shall be constructed of nontoxic material, such as nontreated wood, vinyl-coated wood, nongalvanized steel, plastic, plastic wood, fiberglass or cured concrete that the department determines will not have an adverse impact on water quality;

f. to the maximum extent practical, the exterior of the structure shall be camouflaged with natural wood and earth tone colors to limit visual impacts to wildlife and visibility from the critical area. The camouflage shall be maintained to retain concealment effectiveness;

g. the structure must not adversely impact the long-term health and viability of the tree. The evaluation shall include, but not be limited to, the following:

(1) the quantity of supporting anchors and connection points to attach the tree house to the tree shall be the minimum necessary to adequately support the structure;

(2) the attachments shall be constructed using the best available tree anchor bolt technology; and

(3) an ISA Certified Arborist shall evaluate the tree proposed for placement of the tree house and shall submit a report discussing how the tree's long-term health and viability will not be negatively impacted by the tree house or associated infrastructure;

h. exterior lighting shall meet the following criteria:

(1) limited to the minimum quantity of lights necessary to meet the building code requirements to allow for safe exiting of the structure and stairway; and

(2) exterior lights shall be fully shielded and shall direct light downward, in an attempt to minimize impacts to the nighttime environment;

i. unless otherwise approved by the department, all external construction shall be limited to September 1 through March 1 in order to avoid disturbance to wildlife species during typical breeding, nesting and rearing seasons;

j. trail access to the structure shall be designed in accordance with trail standards under subsection D.47. of this section;

k. to the maximum extent practical, existing native vegetation shall be left undisturbed. Only minimal hand clearing of vegetation is allowed; and

l. vegetated areas within the critical area buffer that are temporarily impacted by construction of the structure shall be restored by planting native vegetation according to a vegetation management plan approved by the department.

65. Shoreline water dependent and shoreline water oriented uses are allowed in the aquatic area and aquatic area buffer of a Type S aquatic area if consistent with K.C.C. chapter 21A.25, chapter 90.58 RCW and the King County Comprehensive Plan.

66. Only hydroelectric generating facilities meeting the requirements of K.C.C. 21A.08.100B.14., and only as follows:

a. there is not another feasible location within the aquatic area with less adverse impact on the critical area and its buffer;

b. the facility and corridor is not located over habitat used for salmonid rearing or spawning or by a species listed as endangered or threatened by the state or federal government unless the department determines that there is no other feasible location;

c. the facility is not located in Category I wetlands or Category II wetlands with a habitat score 30 points or greater

d. the corridor width is minimized to the maximum extent practical;

e. paralleling the channel or following a down-valley route within an aquatic area buffer is avoided to the maximum extent practical;

f. the construction occurs during approved periods for instream work;

g. the facility and corridor will not change or adversely impact the overall aquatic area flow peaks, duration or volume or the flood storage capacity;

h. the facility and corridor is not located within a severe channel migration hazard area;

i. to the maximum extent practical, buildings will be located outside the buffer and away from the aquatic area or wetland;

j. to the maximum extent practical, access for maintenance is at limited access points into the critical area buffer rather than by a parallel maintenance road. If a parallel maintenance road is necessary the following standards are met:

(1) to the maximum extent practical the width of the maintenance road is minimized and in no event greater than fifteen feet; and

(2) the location of the maintenance road is contiguous to the utility corridor on the side of the utility corridor farthest from the critical area;

k. the facility does not pose an unreasonable threat to the public health, safety or welfare on or off the development proposal site and is consistent with the general purposes of this chapter and the public interest; and

l. the facility connects to or is an alteration to a public roadway, public trail, a utility corridor or utility facility or other infrastructure owned or operated by a public utility.

67. Only hydroelectric generating facilities meeting the requirements of K.C.C. 21A.08.100.B.14, and only as follows:

a. there is not another feasible location with less adverse impact on the critical area and its buffer;

b. the alterations will not subject the critical area to an increased risk of landslide or erosion;

c. the corridor width is minimized to the maximum extent practical;

d. vegetation removal is the minimum necessary to locate the utility or construct the corridor;

e. the facility and corridor do not pose an unreasonable threat to the public health, safety or welfare on or off the development proposal site and is consistent with the general purposes of this chapter, and the public interest and significant risk of personal injury is eliminated or minimized in the landslide hazard area; and

f. the facility connects to or is an alteration to a public roadway, public trail, a utility corridor or utility facility or other infrastructure owned or operated by a public utility.

68. Only for a single detached dwelling unit on a lake twenty acres or larger and only as follows:

a. the heat exchanger must be a closed loop system that does not draw water from or discharge to the lake;

b. the lake bed shall not be disturbed, except as required by the county or a state or federal agency to mitigate for impacts of the heat exchanger;

c. the in-water portion of system is only allowed where water depth exceeds six feet; and

d. system structural support for the heat exchanger piping shall be attached to an existing dock or pier or be attached to a new structure that meets the requirements of K.C.C. 21A.25.180.

69. Only for maintenance of agricultural waterways if:

a. the purpose of the maintenance project is to improve agricultural production on a site predominately engaged in the practice of agriculture;

b. the maintenance project is conducted in compliance with a hydraulic project approval issued by the Washington state Department of Fish and Wildlife pursuant to chapter 77.55 RCW;

c. the maintenance project complies with the King County agricultural drainage assistance program as agreed to by the Washington state Department of Fish and Wildlife, the department of permitting and environmental review and the department of natural resources and parks, and as reviewed by the Washington state Department of Ecology;

d. the person performing the maintenance and the land owner have attended training provided by King County on the King County agricultural drainage assistance program and the best management practices required under that program; and

e. the maintenance project complies with K.C.C. chapter 16.82. (Ord. 17841 § 38, 2014: Ord. 17539 § 44, 2013: Ord. 17485 § 18, 2012: Ord. 17191 § 40, 2011: Ord. 16985 § 120, 2010: Ord. 16950 § 24, 2010: Ord. 16267 § 40, 2008: Ord. 15051 § 137, 2004).

***Reviser's notes: Ordinance 17539, Sections 44, 45, 46, 52, 53, 55 and 57, do not apply in the shoreline jurisdiction until the effective date of the Washington state Department of Ecology's approval of the amendments as provided in RCW 90.58.090 and K.C.C. 20.12.205.**

21A.24.051 Agricultural activities development standards.

A. The alterations identified in K.C.C. 21A.24.045 for agricultural activities are allowed to expand within the buffers of wetlands, aquatic areas and wildlife habitat conservation areas, when an agricultural activity is currently occurring on the site and the alteration is in compliance with an approved farm management plan in accordance with this section or, for livestock activities, a farm management plan in accordance with K.C.C. chapter 21A.30.

B. This section does not modify any requirement that the property owner obtain permits for activities covered by the farm management plan.

C. The department of natural resources and parks or its designee shall serve as the single point of contact for King County in providing information on farm management plans for purposes of this title. The department of natural resources and parks shall adopt a public rule governing the development of farm management plans. The rule may provide for different types of farms management plans related to different kinds of agricultural activities, including, but not limited to the best management practices for livestock management, livestock crossing, livestock heavy use areas, horticulture management, site development, farm pads, farm field access roads and agricultural drainage.

D. A property owner or applicant seeking to use the process to allow alterations in critical area buffers shall develop a farm management plan based on the following goals, which are listed in order of priority:

1. To maintain the productive agricultural land base and economic viability of agriculture on the site;

2. To maintain, restore or enhance critical areas to the maximum extent practical in accordance with the site specific goals of the landowner;

3. To the maximum extent practical in accordance with the site specific goals of the landowner, maintain and enhance natural hydrologic systems on the site;

4. To use federal, state and local best management practices and best available science for farm management to achieve the goals of the farm management plan; and

5. To monitor the effectiveness of best management practices and implement additional practices through adaptive management to achieve the goals of the farm management plan.

E. If a part or all of the site is located within the shoreline jurisdiction, the farm management plan shall:

1. Consider and be consistent with the goals of the shoreline management act and the policies of the King County shoreline master program;

2. Consider the priorities of the King County shoreline protection and restoration plan; and

3. Ensure no net loss of shoreline ecological functions.

F. The property owner or applicant may develop the farm management plan as part of a program offered or approved by King County. The plan shall include, but is not limited to, the following elements:

1. A site inventory identifying critical areas, structures, cleared and forested areas, and other significant features on the site;

2. Site-specific performance standards and best management practices to maintain, restore or enhance critical areas and their buffers and maintain and enhance native vegetation on the site including the best management practices for the installation and maintenance of farm field access drives and agricultural drainages;

3. A plan for future changes to any existing structures or for any changes to the landscape that involve clearing or grading;

4. A plan for implementation of performance standards and best management practices;

5. A plan for monitoring the effectiveness of measures taken to protect critical areas and their buffers and to modify the farm management plan if adverse impacts occur.

G. If applicable, a farm management plan shall include documentation of compliance with flood compensatory storage and flood conveyance in accordance with K.C.C. 21A.24.240.

H. A farm management plan is not effective until approved by the county. Before approval, the county may conduct a site inspection, which may be through a program offered or approved by King County, to verify that the plan is reasonably likely to accomplish the goals in subsection D. of this section and consistent with subsection E. of this section.

I. Once approved, activities carried out in compliance with the approved farm management plan shall be deemed in compliance with this chapter. In the event of a potential code enforcement action, the department of permitting and environmental review shall first inform the department of natural resources and parks of the activity. Before taking code enforcement action, the department of permitting and environmental review shall consult with the department of natural resources and parks and the King Conservation District to determine whether the activity is consistent with the farm management plan. (Ord. 17539 § 45, 2013: Ord. 17485 § 19, 2012: Ord. 17420 § 102, 2012: Ord. 15051 § 138, 2004).

***Reviser's note: Ordinance 17539, Sections 44, 45, 46, 52, 53, 55 and 57, do not apply in the shoreline jurisdiction until the effective date of the Washington state Department of Ecology's approval of the amendments as provided in RCW 90.58.090 and K.C.C. 20.12.205.**

21A.24.055 Rural stewardship plans.

A. On a site zoned RA, the department may approve a modification of the minimum buffer widths for aquatic areas, wetlands and wildlife habitat conservation areas and maximum clearing restrictions through a rural stewardship plan for single family detached residential development in accordance with this section.

B. The property owner or applicant shall develop the rural stewardship plan as part of a rural stewardship program offered or approved by King County and has the option of incorporating appropriate components of a county-approved farm management or a county-approved forest stewardship plan.

C. In its evaluation of any proposed modification of the minimum buffer widths for aquatic areas, wetlands and wildlife habitat conservation areas and maximum clearing restrictions, the department shall consider the following factors:

1. The existing condition of the drainage basin or marine shoreline as designated on the Basin and Shoreline Conditions Map;

2. The existing condition of wetland and aquatic area buffers;

3. The existing condition of wetland functions based on the adopted Washington State Wetland Rating System for Western Washington, Washington state department of ecology publication number 04-06-025, published August 2004;

4. The location of the site in the drainage basin;

5. The percentage of impervious surfaces and clearing on the site; and

6. Any existing development on the site that was approved as a result of a variance or alteration exception that allowed development within a critical area or critical area buffer. If the existing development was approved through a variance or alteration exception, the rural stewardship plan shall demonstrate that the plan will result in enhancing the functions and values of critical areas located on the site as if the development approved through the variance or alteration exception had not occurred.

D. A rural stewardship plan does not modify the requirement for permits for activities covered by the rural stewardship plan.

E. Modifications of critical area buffers shall be based on the following prioritized goals:

1. To the maximum extent practical, to avoid impacts to critical areas and, if applicable, to the shoreline jurisdiction;

2. To avoid impacts to the higher quality wetland or aquatic area or the more protected fish or wildlife species, if there is a potential to affect more than one category of wetland or aquatic area or more than one species of native fish or wildlife;

3. To maintain or enhance the natural hydrologic systems on the site to the maximum extent practical;

4. To maintain, restore or enhance native vegetation;

5. To maintain, restore or enhance the function and value of critical areas or critical area buffers located on the site;

6. To minimize habitat fragmentation and enhance corridors between wetlands, riparian corridors, wildlife habitat conservation areas and other priority habitats;

7. To minimize the impacts of development over time by implementing best management practices and meeting performance standards during the life of the development; and

8. To monitor the effectiveness of the stewardship practices and implement additional practices through adaptive management to maintain, restore or enhance critical area functions when necessary.

F. If a part or all of the site is located within the shoreline jurisdiction, the rural stewardship plan shall:

1. Consider and be consistent with the goals of the Shoreline Management Act and the policies of the King County Shoreline Master Program;

2. Consider the priorities of the King County Shoreline Protection and Restoration Plan; and

3. Ensure no net loss of shoreline ecological functions.

G. A rural stewardship plan may include, but is not limited to, the following elements:

1. Critical areas designation under K.C.C. 21A.24.500;

2. Identification of structures, cleared and forested areas and other significant features on the site;

3. Location of wetlands and aquatic areas and their buffers, and wildlife habitat;

4. Analysis of impacts of planned changes to any existing structures, for other changes to the site that involve clearing or grading or for new development;

5. Site-specific best management practices that mitigate impacts of development and that protect and enhance the ecological values and functions of the site;

6. A schedule for implementation of the elements of the rural stewardship plan; and

7. A plan for monitoring the effectiveness of measures approved under the rural stewardship plan and to modify if adverse impacts occur.

H. A rural stewardship plan may be developed as part of a program offered or approved by King County and shall include a site inspection by the county to verify that the plan is reasonably likely to accomplish the goals in subsection E. of this section to protect water quality, reduce flooding and erosion, maintain, restore or enhance the function and value of critical areas and their buffers and maintain or enhance native vegetation on the site of this section.

I. A property owner who completes a rural stewardship plan that is approved by the county may be eligible for tax benefits under the public benefit rating system in accordance with K.C.C. 20.36.100.

J. If a property owner withdraws from the rural stewardship plan, in addition to any applicable penalties under the public benefit rating system, the following apply:

1. Mitigation is required for any structures constructed in critical area buffers under the rural stewardship plan; and

2. The property owner shall apply for buffer averaging or an alteration exception, as appropriate, to permit any structure or use that has been established under the rural stewardship plan and that would not otherwise be permitted under this chapter.

K. A rural stewardship plan is not effective until approved by the county. Before approval, the county may conduct a site inspection, which may be through a program offered or approved by King County, to verify that the plan is reasonably likely to accomplish the goals in subsection E. of this section.

L. Once approved, activities carried out in compliance with the approved rural stewardship plan shall be deemed in compliance with this chapter. In the event of a potential code enforcement action, the department of permitting and environmental review shall first inform the department of natural resources and parks of the activity. Before taking code enforcement action, the department of permitting and environmental review shall consult with the department of natural resources and parks to determine whether the activity is consistent with the rural stewardship plan. (Ord. 17420 § 103, 2012: Ord. 16985 § 121, 2010: Ord. 16267 § 41, 2008: Ord. 15051 § 139, 2004).

21A.24.061 Public rules for rural stewardship and farm management plans.

A. The King County council recognizes that rural stewardship plans and farm management plans are key elements of this chapter that provide flexibility to rural area residents to establish and maintain a rural lifestyle that includes activities such as farming and forestry while maintaining and enhancing rural character and environmental quality.

B. The department of natural resources and parks and department of permitting and environmental review shall adopt public rules to implement K.C.C. 21A.24.045 and 21A.24.051 relating to rural stewardship plans and farm management plans, consistent with the provisions of this section. The rules shall not compromise the King Conservation District's mandate or standards for farm management planning.

C. County departments or approved agencies shall provide technical assistance and resources to landowners to assist them in preparing the plans. The technical assistance shall include, but is not limited to, web-based information, instructional manuals and classroom workshops. When possible, the assistance shall be provided at little or no cost to landowners. In addition, the department of natural resources and parks shall develop, in consultation as necessary with the department of permitting and environmental review and the King Conservation District, and make available to the public, model farm management, forest management and rural stewardship plans illustrating examples of plan application content, drawings and site plans, to assist landowners in their development of site-specific plans for their property.

D. The department of natural resources and parks is the primary county agency responsible for rural stewardship plans and farm management plans that are filed with the county under this chapter. The department of natural resources and parks shall consult with the department of permitting and environmental review in carrying out its responsibilities under this chapter relating to rural stewardship plans and farm management plans. The department of natural resources and parks, [the] department of permitting and environmental review and the King Conservation District may enter into agreements to carry out the provisions of this chapter relating to rural stewardship plans and farm management plans.

E. Not later than March 1, 2005, the department of natural resources and parks and department of permitting and environmental review shall prepare and submit to the chair of the growth management and unincorporated areas committee, or its successor, a

report summarizing the public rules adopted to implement the provisions of this chapter related to farm management plans and rural stewardship plans and how the rules implement the requirements of this section.

F. The department of natural resources and parks and department of permitting and environmental review shall monitor and evaluate the effectiveness of rural stewardship and farm management plans in meeting the goals and objectives of those plans established in this chapter. Beginning March 31, 2006, the departments shall present an annual report to the chair of the metropolitan King County council, providing an evaluation of the prior year's activity related to rural stewardship and farm management plans. (Ord. 17420 § 104, 2012: Ord. 15051 § 140, 2004).

21A.24.065 Basin and Shoreline Conditions Map.

A. The Basin and Shoreline Conditions Map, included in Attachment A to Ordinance 15051, is the basis for determining standards or modifications of standards related to aquatic areas, wetlands complexes and RA zone clearing limits.

B. Basins and marine shorelines are rated as "high," "medium," or "low" using the criteria listed in subsection C of this section and can be generally characterized as follows:

1. High condition ratings are generally reflective of areas with low development intensity (e.g., substantial forest cover, relatively few roads crossing aquatic areas and wetlands, low amounts of impervious surfaces, and low amounts armoring and structures along shorelines) and a significant biological value (e.g., the presence or high use by critical species or the presence of rare, endangered or highly sensitive habitats).

2. Medium condition ratings are generally reflective of areas with either high or moderate development intensity and moderate or low insignificant biological value.

3. Low condition ratings are generally reflective of areas with high development intensity (e.g., reduced forest cover, many roads crossing aquatic areas and wetlands, significant amounts of impervious surfaces, and extensive amount of armoring and structures along shorelines) and a low biological value (e.g., the little presence or low use by critical species or little or no presence of rare, endangered or highly sensitive habitats).

C. Ratings designated on the Basin and Shoreline Conditions Map shall be determined in accordance with the following criteria:

1. Basin conditions for riverine tributary systems are based on:

a. presence and amount of use for spawning and rearing and habitat for chinook salmon, bull trout, coho salmon, chum salmon and cutthroat trout;

b. total impervious surface area;

c. number of acres of mapped category I wetlands;

d. number of road crossings of aquatic areas;

e. surrounding land use intensity;

f. amount of forest cover;

g. presence of mapped wildlife habitat network; and

h. presence of mapped priority species nests or breeding habitat.

2. Conditions for marine shorelines are based on:

a. presence and amount of forage fish, such as surf smelt and sand lance and the extent of their spawning sites within the drift cell;

b. length and percentage of cell without eelgrass, with patchy eelgrass and with continuous eelgrass;

c. the amount and type of forest cover;

d. length and percentage of cell with low, moderate and high impervious surface;

e. presence and amount of large woody debris and drift logs;

f. length and percentage of cell armored and unstable slope armored

g. number of docks, piers, groins, jetties, breakwaters and boat ramps;

h. number of marsh areas present and length and percentage of cell within marsh habitat;

i. length and percentage of cell within important bird area; and

j. length and percentage of cell within marine reserve. (Ord. 15051 § 141, 2004).

21A.24.070 Alteration exception.

A. The director may approve alterations to critical areas, critical area buffers and critical area setbacks not otherwise allowed by this chapter as follows:

1. Except as otherwise provided in subsection A.2. of this section, for linear alterations, the director may approve alterations to critical areas, critical area buffers and critical area setbacks only when all of the following criteria are met:

a. there is no feasible alternative to the development proposal with less adverse impact on the critical area;

b. the proposal minimizes the adverse impact on critical areas to the maximum extent practical;

c. the approval does not require the modification of a critical area development standard established by this chapter;

d. the development proposal does not pose an unreasonable threat to the public health, safety or welfare on or off the development proposal site and is consistent with the general purposes of this chapter and the public interest;

e. the linear alteration:

(1) connects to or is an alteration to a public roadway, regional light rail transit line, public trail, a utility corridor or utility facility or other public infrastructure owned or operated by a public utility; or

(2) is required to overcome limitations due to gravity;

2. In order to accommodate the siting of a regional light rail transit facility under RCW 36.70A.200, the director may approve alterations to critical areas, critical area buffers and critical area setbacks not otherwise allowed by this chapter and may impose reasonable conditions to minimize the impact of the light rail transit facility on the critical area and its buffer; and

3. For nonlinear alterations the director may approve alterations to critical areas except wetlands, unless otherwise allowed under subsection A.2.h. of this section, aquatic areas and wildlife habitat conservation areas, and alterations to critical area buffers and critical area setbacks, when all of the following criteria are met:

a. there is no feasible alternative to the development proposal with less adverse impact on the critical area;

b. the alteration is the minimum necessary to accommodate the development proposal;

c. the approval does not require the modification of a critical area development standard established by this chapter, except as set forth in subsection A.2.i. of this section;

d. the development proposal does not pose an unreasonable threat to the public health, safety or welfare on or off the development proposal site and is consistent with the general purposes of this chapter and the public interest;

e. for dwelling units, no more than five thousand square feet or ten percent of the site, whichever is greater, may be disturbed by structures, building setbacks or other land alteration, including grading, utility installations and landscaping, but not including the area used for a driveway or for an on-site sewage disposal system;

f. to the maximum extent practical, access is located to have the least adverse impact on the critical area and critical area buffer;

g. the critical area is not used as a salmonid spawning area;

h. the director may approve an alteration in a category II, III and IV wetland for development of a public school facility; and

i. the director may approve an alteration to the elevation or dry flood proofing standards in K.C.C. 21A.24.240.F.1. or 21A.24.240.F.2. for nonresidential agricultural accessory buildings that equal or exceed a maximum assessed value of sixty-five thousand dollars if the development proposal meets the criteria in subsection A.2. of this section and the standards in K.C.C. 21A.24.240.F.4. through 21A.24.240.G.

B. The director may approve alterations to critical areas, critical area buffers and critical area setbacks if the application of this chapter would deny all reasonable use of the property as follow:

1. If the critical area, critical area buffer or critical area setback is outside of the shoreline jurisdiction, the applicant may apply for a reasonable use exception under this subsection without first having applied for an alteration exception under this section if the requested reasonable use exception includes relief from development standards for which an alteration exception cannot be granted under this section. The director shall determine that all of the following criteria are met:

a. there is no other reasonable use with less adverse impact on the critical area;

b. development proposal does not pose an unreasonable threat to the public health, safety or welfare on or off the development proposal site and is consistent with the general purposes of this chapter and the public interest;

c. any authorized alteration to the critical area or critical area buffer is the minimum necessary to allow for reasonable use of the property; and

d. for dwelling units, no more than five thousand square feet or ten percent of the site, whichever is greater, may be disturbed by structures, building setbacks or other land alteration, including grading, utility installations and landscaping but not including the area used for a driveway or for an on-site sewage disposal system; and

2. If the critical area, critical area buffer or critical area setback is located within the shoreline jurisdiction, the request for a reasonable use exception shall be considered a request for a shoreline variance under K.C.C. 21A.44.090.

C. For the purpose of this section:

1. "Linear" alteration means infrastructure that supports development that is linear in nature and includes public and private roadways, public trails, private driveways, railroads, regional light rail transit, hydroelectric generating facilities, utility corridors and utility facilities; and

2. For purposes of subsections A. and B. of this section, areas located within the shoreline jurisdiction that are below the ordinary high water mark shall not be included in calculating the site area.

D. Alteration exceptions approved under this section shall meet the mitigation requirements of this chapter.

E. An applicant for an alteration exception shall submit a critical area report, as required by K.C.C. 21A.24.110. (Ord. 17539 § 46, 2013: Ord. 17191 § 41, 2011: Ord. 16985 § 122, 2010: Ord. 16267 § 42, 2008: Ord. 16172 § 2, 2008: Ord. 15051 § 142, 2004: Ord. 13190 § 19, 1998: Ord. 12196 § 54, 1996: Ord. 11621 § 73, 1994: Ord. 10870 § 454, 1993).

***Reviser's note: Ordinance 17539, Sections 44, 45, 46, 52, 53, 55 and 57, do not apply in the shoreline jurisdiction until the effective date of the Washington state Department of Ecology's approval of the amendments as provided in RCW 90.58.090 and K.C.C. 20.12.205.**

21A.24.072 Alteration exception – alternative.

A. As an alternative to an alteration exception under K.C.C. 21A.24.070, during review of an application for a single detached dwelling unit, the director may approve an alteration to a wetland buffer, aquatic area buffer, steep slope hazard area and associated buffer, landslide hazard area and associated buffer and critical area setback as follows:

1. There is no feasible alternative to the development proposal with less adverse impact on the critical area;

2. The alteration is the minimum necessary to accommodate residential use of the property;

3. The approval does not require the modification of a critical area development standard established by this chapter;

4. The development proposal does not pose an unreasonable threat to the public health, safety or welfare on or off the development proposal site and is consistent with the general purposes of this chapter and the public interest;

5. No more than five thousand square feet or ten percent of the site, whichever is greater, are disturbed by structures, building setbacks or other land alteration, including grading, utility installations and landscaping, but not including the area used for a driveway or for an on-site sewage disposal system. For purposes of this section, areas located within the shoreline jurisdiction that are below the ordinary high water mark shall not be included in calculating the site area;

6. The applicant submits an approved rural stewardship plan or forest stewardship plan prepared in accordance with this chapter that addresses the development proposal and the proposed use of the property; and

7. The proposal complies with K.C.C. 21A.24.125 and 21A.24.130.

B. The applicant for the waiver of the alteration exception process shall submit any critical areas studies, alternatives analysis and other documents requested by the department following a preapplication review meeting.

C. Within fourteen calendar days after the department determines the application under this section is complete, it shall provide written mailed notice of the proposed alteration as provided in K.C.C. 20.20.080.H.

D. The department shall allow twenty-one calendar days for comment before making a decision on the request under this section. The department's decision shall be mailed to the applicant and to any other person who requests a copy. The decision shall state the reasons for the decision and, if approved, shall include any required mitigation or conditions. (Ord. 17539 § 47, 2013).

21A.24.090 Disclosure by applicant. If a development proposal site contains or is within a critical area, the applicant shall submit an affidavit which declares whether:

A. The applicant has knowledge of any illegal alteration to any or all critical areas on the development proposal site; and

B. The applicant previously has been found in violation of this chapter, in accordance with K.C.C. Title 23. If the applicant previously has been found in violation, the applicant shall declare whether the violation has been corrected to the satisfaction of King County. (Ord. 15051 § 145, 2004: Ord. 10870 § 456, 1993).

21A.24.100 Critical area review.

A. Before any clearing, grading or site preparation, the department shall perform a critical area review for any development proposal permit application or other request for permission to alter a site to determine whether there is:

1. A critical area on the development proposal site;

2. An active breeding site of a protected species on the development proposal site; or

3. A critical area or active breeding site of a protected species that has been mapped, identified within three hundred feet of the applicant's property or that is visible from the boundaries of the site.

B. As part of the critical area review, the department shall review the critical area reports and determine whether:

1. There has been an accurate identification of all critical areas;

2. An alteration will occur to a critical area or a critical area buffer;

3. The development proposal is consistent with this chapter;

4. The sequence in K.C.C. 21A.24.125 has been followed to avoid impacts to critical areas and critical area buffers; and

5. Mitigation to compensate for adverse impacts to critical areas is required and whether the mitigation and monitoring plans and bonding measures proposed by the applicant are sufficient to protect the general public health, safety and welfare, consistent with the goals, purposes, objectives and requirements of this chapter.

C. If a development proposal does not involve any site disturbance, clearing, or grading and only requires a permit or approval under K.C.C. chapter 16.04 or 17.04, critical area review is not required, unless the development proposal is located within a:

1. Flood hazard area;

2. Critical aquifer recharge area; or

3. Landslide hazard area, seismic hazard area, or coal mine hazard area and the proposed development will cause additional loads on the foundation, such as by expanding the habitable square footage of the structure or by adding or changing structural features that change the load bearing characteristics of the structure. (Ord. 15051 § 146, 2004: Ord. 14449 § 9, 2002: Ord. 10870 § 457, 1993).

21A.24.110 Critical area report requirement.

A. An applicant for a development proposal that requires critical area review under K.C.C. 21A.24.100 shall submit a critical area report at a level determined by the department to adequately evaluate the proposal and all probable impacts.

B. The applicant may combine a critical area report with any studies required by other laws and regulations.

C. If the development proposal will affect only a part of the development proposal site, the department may limit the scope of the required critical area report to include only that part of the site that is affected by the development proposal.

D.1. Floodplain development that was not assessed through the King County Programmatic Habitat Assessment prepared for the National Flood Insurance program and the Endangered Species Act shall include an assessment of the impact of the alteration on water quality and aquatic and riparian habitat. The assessment shall be:

a. A Biological Evaluation or Biological Assessment that has received concurrence from the United States Fish and Wildlife Service or the National Marine Fisheries Service, pursuant to Section 7 of the Endangered Species Act;

b. Documentation that the activity fits within a Habitat Conservation Plan approved pursuant to Section 10 of the Endangered Species Act;

c. Documentation that the activity fits within Section 4(d) of the Endangered Species Act;

d. An assessment prepared in accordance with Regional Guidance for Floodplain Habitat Assessment and Mitigation, FEMA Region X, 2010. The assessment shall determine if the project would adversely affect any one or more of the following:

(1) the primary constituent elements identified when a species is listed as threatened or endangered;

(2) Essential Fish Habitat designated by the National Marine Fisheries Service;

(3) fish and wildlife habitat conservation areas;
(4) vegetation communities and habitat structures;
(5) water quality;
(6) water quantity, including flood and low flow depths, volumes and velocities;
(7) the river or stream channel's natural planform pattern and migration process;
(8) spawning substrate, if applicable; and
(9) floodplain refugia, if applicable.

2. The department must require a project with adverse effects to comply with the impact avoidance, minimization and mitigation requirements of K.C.C. 21A.24.125 and 21A.24.130.

(Ord. 17539 § 48, 2013: Ord. 15051 § 147, 2004: Ord. 10870 § 458, 1993).

21A.24.125 Avoiding impacts to critical areas.

A. An applicant for a development proposal or alteration, shall apply the following sequential measures, which appear in order of priority, to avoid impacts to critical areas and critical area buffers:

1. Avoiding the impact or hazard by not taking a certain action;
2. Minimizing the impact or hazard by:
   a. limiting the degree or magnitude of the action with appropriate technology; or
   b. taking affirmative steps, such as project redesign, relocation or timing;
3. Rectifying the impact to critical areas by repairing, rehabilitating or restoring the affected critical area or its buffer;
4. Minimizing or eliminating the hazard by restoring or stabilizing the hazard area through engineered or other methods;
5. Reducing or eliminating the impact or hazard over time by preservation or maintenance operations during the life of the development proposal or alteration;
6. Compensating for the adverse impact by enhancing critical areas and their buffers or creating substitute critical areas and their buffers; and
7. Monitoring the impact, hazard or success of required mitigation and taking remedial action.

B. The specific mitigation requirements of this chapter for each critical area or requirements determined through the resource mitigation reserves program apply when compensation for adverse impacts is required by the sequence in subsection A. of this section. (Ord. 15051 § 149, 2004).

21A.24.130 Mitigation and monitoring.

A. If mitigation is required under this chapter to compensate for adverse impacts, unless otherwise provided, an applicant shall:

1. Mitigate adverse impacts to:
   a. critical areas and their buffers; and
   b. the development proposal as a result of the proposed alterations on or near the critical areas; and
2. Monitor the performance of any required mitigation.

B. The department shall not approve a development proposal until mitigation and monitoring plans are in place to mitigate for alterations to critical areas and buffers.

C. Whenever mitigation is required, an applicant shall submit a critical area report that includes:

1. An analysis of potential impacts;
2. A mitigation plan that meets the specific mitigation requirements in this chapter for each critical area impacted; and
3. A monitoring plan that includes:

a. a demonstration of compliance with this title;

b. a contingency plan in the event of a failure of mitigation or of unforeseen impacts if:

(1) the department determines that failure of the mitigation would result in a significant impact on the critical area or buffer; or

(2) the mitigation involves the creation of a wetland; and

c. a monitoring schedule that may extend throughout the impact of the activity or, for hazard areas, for as long as the hazard exists.

D. Mitigation shall not be implemented until after the department approves the mitigation and monitoring plan. The applicant shall notify the department when mitigation is installed and monitoring is commenced and shall provide King County with reasonable access to the mitigation for the purpose of inspections during any monitoring period.

E. If monitoring reveals a significant deviation from predicted impact or a failure of mitigation requirements, the applicant shall implement an approved contingency plan. The contingency plan constitutes new mitigation and is subject to all mitigation including a monitoring plan and financial guarantee requirements. (Ord. 15051 § 150, 2004: Ord. 10870 § 460, 1993).

21A.24.133 Off-site mitigation.

A. To the maximum extent practical, an applicant shall mitigate adverse impacts to a wetland, aquatic area, wildlife habitat conservation area or wildlife habitat network on or contiguous to the development site. The department may approve mitigation that is off the development site if an applicant demonstrates that:

1. It is not practical to mitigate on or contiguous to the development proposal site; and

2. The off-site mitigation will achieve equivalent or greater hydrological, water quality and wetland or aquatic area habitat functions.

B. When off-site mitigation is authorized, the department shall give priority to locations within the same drainage subbasin as the development proposal site that meet the following:

1. Mitigation banking sites and resource mitigation reserves as authorized by this chapter;

2. Private mitigation sites that are established in compliance with the requirements of this chapter and approved by the department; and

3. Public mitigation sites that have been ranked in a process that has been supported by ecological assessments, including wetland and aquatic areas established as priorities for mitigation in King County basin plans or other watershed plans.

C. The department may require documentation that the mitigation site has been permanently preserved from future development or alteration that would be inconsistent with the functions of the mitigation. The documentation may include, but is not limited to, a conservation easement or other agreement between the applicant and owner of the mitigation site. King County may enter into agreements or become a party to any easement or other agreement necessary to ensure that the site continues to exist in its mitigated condition.

D. The department shall maintain a list of sites available for use for off-site mitigation projects.

E. The department and the department of natural resources and parks have develop a program to allow the payment of a fee in lieu of providing mitigation on a development site. The program addresses:

1. When the payment of a fee is allowed considering the availability of a site in geographic proximity with comparable hydrologic and biological functions and potential for future habitat fragmentation and degradation; and

2. The use of the fees for mitigation on public or private sites that have been ranked according to ecological criteria through one or more programs that have included a public process. (Ord. 17254 § 4, 2012: Ord. 15051 § 151, 2004).

21A.24.137 Approval of mitigation through mitigation reserves program. The department may approve mitigation to compensate for the adverse impacts of a development proposal to critical areas through [and through use of an in-lieu fee program]*. [or in-lieu fee program]* the King County mitigation reserves program. (Ord. 17539 § 49, 2013: Ord. 17254 § 5, 2012: Ord. 15051 § 152, 2004).

***Reviser's note: Language did not appear in Ordinance 17539 and was not struck through. See K.C.C. 1.24.075.**

21A.24.140 Financial guarantees. Financial guarantees shall be required consistent with the provisions of Title 27A. (Ord. 12020 § 54, 1995: Ord. 10870 § 461, 1993).

21A.24.160 Critical area markers and signs.

A. Development proposals shall include permanent survey stakes delineating the boundary between adjoining property and critical area tracts, using iron or concrete markers as established by current survey standards.

B. The applicant shall identify the boundary between a critical area tract and contiguous land with permanent signs. The department may require signs and fences to delineate and protect critical areas and critical area buffers that are not in critical area tracts. (Ord. 15051 § 154, 2004: Ord. 10870 § 463, 1993).

21A.24.170 Notice of critical areas.

A. Except as otherwise provided in subsection of C. of this section, the owner of any property containing critical areas or buffers on which a development proposal is submitted or any property on which mitigation is established as a result of development shall file a notice approved by King County with the records and licensing services division. The notice shall inform the public of:

1. The presence of critical areas or buffers or mitigation sites on the property;
2. The application of this chapter to the property; and
3. The possible existence of limitations on actions in or affecting the critical areas or buffers or the fact that mitigation sites may exist.

B. The applicant for a development proposal shall submit proof that the notice required by this section has been filed for public record before King County approves any development proposal for the property or, in the case of subdivisions, short subdivisions and binding site plans, at or before recording of the subdivision, short subdivision or binding site plan.

C. The notice required under subsection A. of this section is not required if:

1. The property is a public right-of-way or the site of a permanent public facility;
2. The development proposal does not require sensitive area review under K.C.C. 21A.24.100.C; or
3. The property only contains a critical aquifer recharge area. (Ord. 16267 § 43, 2008: Ord. 15971 § 98, 2007: Ord. 15051 § 155, 2004: Ord. 14449 § 10, 2002: Ord. 14187 § 3, 2001: Ord. 10870 § 464, 1993).

21A.24.180 Critical area tracts and designations on site plans.

A. The applicant shall establish critical area tracts to delineate and protect those critical areas and buffers listed below in development proposals for subdivisions, short subdivisions or binding site plans and shall record the tracts on all documents of title of record for all affected lots:

1. All landslide hazard areas and buffers that are one acre or more in size;
2. All steep slope hazard areas and buffers that are one acre or more in size;
3. All wetlands and buffers; and
4. All aquatic areas and buffers.

B. A critical area tract established under subsection A. of this section shall be held in an undivided interest by each owner of a building lot within the development with this ownership interest passing with the ownership of the lot, or shall be held by an incorporated homeowner's association or other legal entity that ensures the ownership, maintenance and protection of the tract.

C. The long-term management goals for critical area tracts established under subsection A. of this section are to protect and enhance critical area functions and values, including, but not limited to, providing fish and wildlife habitat and protecting the public from geologic hazards and increased stormwater runoff. The specific management strategy for each tract shall be clearly defined before preliminary approval of the subdivision or binding site plan.

D. In lieu of the requirements of subsection A. of this section, the director may allow an applicant to include critical areas in resource tracts established under K.C.C. 21A.14.040.B.7. The resource tract management plan shall clearly state that the purpose of the resource portion is for resource management and the purpose of the designated critical areas is for critical area protection and enhancement and protecting the public from geologic hazards and increased stormwater runoff.

E. Site plans submitted as part of building permits, clearing and grading permits or other development permits shall include and delineate:

1. All flood hazard areas, as determined by King County in accordance with K.C.C. 21A.24.230;
2. Landslide, volcanic, coal mine and steep slope hazard areas;
3. Aquatic areas and wetlands;
4. Wildlife habitat conservation areas and the wildlife habitat network;
5. Buffers; and
6. Building setbacks as required by K.C.C. 21A.24.200.

F. If only a part of the development site has been mapped, the part of the site that has not been mapped shall be clearly identified and labeled on the site plans. (Ord. 17539 § 50, 2013: Ord. 15051 § 156, 2004: Ord. 14449 § 11, 2002: Ord. 10870 § 465, 1993).

21A.24.185 Vegetation management plans. A. If future alterations are proposed to a critical area tract created under this chapter or to an area where preservation of existing vegetation is required by ordinance, the applicant shall submit and have approved by the department a vegetation management plan before the establishment of the critical area tract or issuance of the permit requiring preservation of existing vegetation.

B. The vegetation management plan shall describe the long-term management goals for the critical area tract or protected area. The management goals shall include, but are not limited to:

1. Wildlife habitat protection and enhancement;
2. Water quality protection and enhancement;
3. Maintaining or improving hydrologic conditions; and
4. Protecting the public health and safety from geologic hazards and erosion.

C. If the vegetation management includes harvesting of merchantable timber, as defined in WAC 222-16-010, the vegetation management plan shall include a description of the proposed harvest practices demonstrating how the critical area management goals of this chapter will be met.

D. Vegetation management practices shall avoid soil disturbance and shall be conducted in a manner that will not adversely affect slope stability, cause erosion or affect water quality. The management plan shall require the use of appropriate native plants for replacement or enhancement.

E. Vegetation management plans shall be prepared by an arborist, landscape architect, forester or other qualified vegetation management specialist with technical assistance from a geologist where geologic hazard areas are involved or an ecologist or wildlife biologist or other qualified specialists where resource protection areas are involved. (Ord. 17539 § 51, 2013).

21A.24.200 Building setbacks. Unless otherwise provided, an applicant shall set buildings and other structures back a distance of fifteen feet from the edges of all critical area buffers or from the edges of all critical areas, if no buffers are required. The following are allowed in the building setback area:

A. Landscaping;

B. Uncovered decks;

C. Building overhangs if the overhangs do not extend more than eighteen inches into the setback area;

D. Impervious ground surfaces, such as driveways and patios, but the improvements are required to meet any special drainage provisions specified in public rules adopted for the various critical areas;

E. Utility service connections as long as the excavation for installation avoids impacts to the buffer; and

F. Minor encroachments if adequate protection of the buffer will be maintained. (Ord. 15051 § 157, 2004: Ord. 10870 § 467, 1993).

21A.24.205 Coal mine hazard areas — classifications. Based upon a critical area report containing a coal mine hazard assessment prepared in accordance with this chapter, the department shall classify coal mine hazard areas as follows:

A. Declassified coal mine areas are those areas where the risk of catastrophic collapse is not significant and that the hazard assessment report has determined do not require special engineering or architectural recommendations to prevent significant risks of property damage. Declassified coal mine areas typically include, but are not limited to, areas underlain or directly affected by coal mines at depths of more than three hundred feet as measured from the surface;

B. Moderate coal mine hazard areas are those areas that pose significant risks of property damage that can be mitigated by implementing special engineering or architectural recommendations. Moderate coal mine hazard areas typically include, but are not limited to, areas underlain or directly affected by abandoned coal mine workings from a depth of zero, which is the surface of the land, to three hundred feet or with overburden-cover-to-seam thickness ratios of less than ten to one depending on the inclination of the seam; and

C. Severe coal mine hazard areas are those areas that pose a significant risk of catastrophic ground surface collapse. Severe coal mine hazard areas typically include, but are not limited to, areas characterized by unmitigated openings such as entries, portals, adits, mine shafts, air shafts, timber shafts, sinkholes, improperly filled sinkholes and other areas of past or significant probability for catastrophic ground surface collapse; or areas characterized by , overland surfaces underlain or directly affected by abandoned

coal mine workings from a depth of zero, which is the surface of the land, to one hundred fifty feet. (Ord. 15051 § 158, 2004).

21A.24.210 Coal mine hazard areas — development standards and alterations. The following development standards apply to development proposals and alterations on sites containing coal mine hazard areas:

A. The applicant shall design alterations within coal mine hazard areas to:

1. Minimize the risk of structural damage in a moderate coal mine hazard area; and

2. Eliminate or minimize significant risk of personal injury in a severe coal mine hazard area;

B. Within declassified coal mine areas all alterations are allowed;

C. Within moderate coal mine hazard areas and coal mine by-product stockpiles, all alterations are allowed when the risk of structural damage is minimized; and

D. Within severe coal mine hazard areas the following alterations are allowed:

1. All grading, filling, stockpile removal, and reclamation activities undertaken in accordance with a coal mine hazard assessment report with the intent of eliminating or mitigating threats to human health, public safety, environmental restoration or protection of property if:

a. signed and stamped plans have been prepared by a professional engineer;

b. as-built drawings are prepared following reclamation activities; and

c. the plans and as-built drawings are submitted to the department for inclusion with the coal mine hazard assessment report prepared for the property;

2. Private road construction when significant risk of personal injury is eliminated or minimized;

3. Buildings with less than four thousand square feet of floor area that contain no living quarters and that are not used as places of employment or public assembly when significant risk of personal injury is eliminated or minimized; and

4. Additional land use activities if consistent with recommendations contained within any mitigation plan required by a critical area report. (Ord. 15051 § 159, 2004: Ord. 13319 § 7, 1998: Ord. 11896 § 1, 1995: Ord. 10870 § 468, 1993).

21A.24.220 Erosion hazard areas — development standards and alterations. The following development standards apply to development proposals and alterations on sites containing erosion hazard areas:

A. Clearing in an erosion hazard area is allowed only from April 1 to October 1, except that:

1. Clearing of up to fifteen-thousand square feet within the erosion hazard area may occur at any time on a lot;

2. Clearing of noxious weeds may occur at any time; and

3. Forest practices regulated by the department are allowed at any time in accordance with a clearing and grading permit if the harvest is in conformance with chapter 76.09 RCW and Title 222 WAC;

B. All subdivisions, short subdivisions, binding site plans or urban planned developments on sites with erosion hazard areas shall retain existing vegetation in all erosion hazard areas until building permits are approved for development on individual lots. The department may approve clearing of vegetation on lots if:

1. The clearing is a necessary part of a large scale grading plan; and

2. It is not feasible to perform the grading on an individual lot basis; and

C. If the department determines that erosion from a development site poses a significant risk of damage to downstream wetlands or aquatic areas, based either on the size of the project, the proximity to the receiving water or the sensitivity of the receiving

water, the applicant shall provide regular monitoring of surface water discharge from the site. If the project does not meet water quality standards established by law or public rules, the county may suspend further development work on the site until such standards are met. (Ord. 15051 § 160, 2004: Ord. 10870 § 469, 1993).

21A.24.230 Flood hazard areas — components.

A. A flood hazard area consists of the following components:

1. Floodplain;
2. Zero-rise flood fringe;
3. Zero-rise floodway;
4. FEMA floodway; and
5. Channel migration zones.

B. The department may delineate a flood hazard area after reviewing base flood elevations and flood hazard data for a flood having a one percent chance of being equaled or exceeded in any given year, often referred to as the "one-hundred-year flood." The department shall determine the base flood for existing conditions. If a basin plan or hydrologic study including projected flows under future developed conditions has been completed and is currently approved by King County, the department may use these future flow projections. Many flood hazard areas are mapped by FEMA in a scientific and engineering report entitled "The Flood Insurance Study for King County and Incorporated Areas." Proof that a land use or development activity is occurring within the area mapped on the Flood Hazard Area Study for King County and Incorporated Areas shall be sufficient, but not required, to prove that the area of concern is subject to inundation by the base flood in any action to enforce code compliance under K.C.C. Title 23. When there are multiple sources of flood hazard data for flood plain boundaries, regulatory floodway boundaries, base flood elevations, or flood cross sections, the department may determine which data most accurately classifies and delineates the flood hazard area. The department may utilize the following sources of flood hazard data for floodplain boundaries, regulatory floodway boundaries, base flood elevations or cross sections when determining a flood hazard area:

1. Flood Insurance Rate Maps;
2. Flood Insurance Studies;
3. Preliminary Flood Insurance Rate Maps;
4. Preliminary Flood Insurance Studies;
5. Draft flood boundary work maps and associated technical reports;
6. Critical area reports prepared in accordance with FEMA standards contained in 44 C.F.R. Part 65 and consistent with the King County Surface Water Design Manual provisions for floodplain analysis;
7. Letter of map amendments;
8. Letter of map revisions;
9. Channel migration zone maps and studies;
10. Historical flood hazard information;
11. Wind and wave data provided by the United States Army Corps of Engineers; and
12. Any other available data that accurately classifies and delineates the flood hazard area or base flood elevation.

C. A number of channel migration zones are mapped by the county for portions of river systems. These channel migration zones and the criteria and process used to designate and classify channel migration zones are specified by public rule adopted by the department. An applicant for a development proposal may submit a critical area report to the department to determine channel migration zone boundaries or classify channel migration hazard areas on a specific property if there is an apparent discrepancy

between the site-specific conditions or data and the adopted channel migration zone maps. (Ord. 17841 § 39, 2014: Ord. 16686 § 2, 2009: Ord. 15051 § 161, 2004: Ord. 10870 § 470, 1993).

21A.24.240 Zero-rise flood fringe — development standards and alterations. The following development standards apply to development proposals and alterations on sites within the zero-rise flood fringe:

A. Development proposals and alterations shall not reduce the effective base flood storage volume of the floodplain. A development proposal shall provide compensatory storage if grading or other activity displaces any effective flood storage volume. Compensatory storage is not required for grading or fill placed within the foundation of an existing residential structure to bring the interior foundation grade to the same level as the lowest adjacent exterior grade. Compensatory storage shall:

1. Provide equivalent volume at equivalent elevations to that being displaced. For this purpose, equivalent elevations means having similar relationship to ordinary high water and to the best available ten-year, fifty-year and one-hundred-year water surface profiles. If the difference between the fifty-year and the one-hundred-year surface profiles is less than one foot, equivalent elevations means having similar relationships to ordinary high water and to the best available ten-year and one-hundred-year water surface profiles;

2. Hydraulically connect to the source of flooding;

3. Provide compensatory storage in the same construction season as when the displacement of flood storage volume occurs and before the flood season begins on September 30 for that year;

4. Occur on the site. The director may approve equivalent compensatory storage off the site if legal arrangements, acceptable to the department, are made to ensure that the effective compensatory storage volume will be preserved over time; and

5. The director may approve of off site compensatory storage through a compensatory storage bank managed by the department of natural resources and parks or the director, in consultation with and agreement from the department of natural resources and parks, may allow a reduction in flood storage if a cumulative effects analysis demonstrates that the loss of storage will not create a measurable increase in the base flood elevation anywhere off the site;

B. A structural engineer shall design and certify all elevated buildings and submit the design to the department;

C. A civil engineer shall prepare a base flood depth and base flood velocity analysis and submit the analysis to the department. A base flood depth and base flood velocity analysis is not required for agricultural structures that will not be used for human habitation. The director may waive the requirement for a base flood depth and base flood velocity analysis for agricultural structures that are not used for human habitation. Development proposals and alterations are not allowed if the base flood depth exceeds three feet and the base flood velocity exceeds three feet per second, except that the director may approve development proposals and alterations in areas where the base flood depth exceeds three feet and the base flood velocity exceeds three feet per second for the following projects;

1. Agricultural accessory structures;
2. Roads and bridges;
3. Utilities;
4. Surface water flow control or surface water conveyance systems;
5. Public park structures; and
6. Flood hazard mitigation projects, such as, but not limited to construction, repair or replacement of flood protection facilities or for building elevations or relocations;

D. Subdivisions, short subdivisions, urban planned developments and binding site plans shall meet the following requirements:

1. New building lots shall include five thousand square feet or more of buildable land outside the zero-rise floodway;

2. All utilities and facilities such as sewer, gas, electrical and water systems are consistent with subsections E., F. and I. of this section;

3. A civil engineer shall prepare detailed base flood elevations in accordance with FEMA guidelines for all new lots;

4. A development proposal shall provide adequate drainage in accordance with the King County Surface Water Design Manual to reduce exposure to flood damage; and

5. The face of the recorded subdivision, short subdivision, urban planned development or binding site plan shall include the following for all lots:

a. building setback areas restricting structures to designated buildable areas:

b. base flood data and sources and flood hazard notes including, but not limited to, base flood elevation, required flood protection elevations, the boundaries of the floodplain and the zero-rise floodway, if determined, and channel migration zone boundaries, if determined; and

c. include the following notice:

"Lots and structures located within flood hazard areas may be inaccessible by emergency vehicles during flood events. Residents and property owners should take appropriate advance precautions.";

E. New residential structures, substantial improvements of existing residential structures and flood mitigation home elevations shall meet the following standards:

1. Elevate the lowest floor, including basement, to the flood protection elevation;

2. Do not fully enclose portions of the structure that are below the lowest floor area;

3. Design and construct the areas and rooms below the lowest floor to automatically equalize hydrostatic and hydrodynamic flood forces on exterior walls by allowing for the entry and exit of floodwaters as follows:

a. provide a minimum of two openings on each of two opposite side walls in the direction of flow, with each of those walls having a total open area of not less than one square inch for every square foot of enclosed area subject to flooding;

b. design and construct the bottom of all openings so they are no higher than one foot above grade; and

c. screens, louvers or other coverings or devices are allowed over the opening if they allow the unrestricted entry and exit of floodwaters;

4. Use materials and methods that are resistant to and minimize flood damage; and

5. Elevate above or dry-proof all electrical, heating, ventilation, plumbing, air conditioning equipment and other utilities that service the structure, such as duct-work to the flood protection elevation;

F. New nonresidential structures, substantial improvements and flood mitigation nonresidential elevations of existing nonresidential structures shall meet the following standards:

1.a. Except as provided in subsection F.1.b. of this section, elevate the lowest floor to the flood protection elevation;

b. Nonresidential agricultural accessory buildings elevate the lowest floor to one foot above the base flood elevation;

2. Dry flood-proof the structure to the flood protection elevation to meet the following standards:

a. the applicant shall provide certification by a civil or structural engineer that the dry flood-proofing methods are adequate to withstand the flood-depths, pressures,

velocities, impacts, uplift forces and other factors associated with the base flood. After construction, the engineer shall certify that the permitted work conforms to the approved plans and specifications; and

b. approved building permits for dry flood-proofed nonresidential structures shall contain a statement notifying applicants that flood insurance premiums are based upon rates for structures that are one foot below the elevation to which the building is dry-floodproofed;

3. Nonresidential agricultural accessory buildings that do not equal or exceed a maximum assessed value of sixty-five thousand dollars may be designed and oriented to allow the free passage of floodwaters through the building in a manner affording minimum flood damage provided they meet the standards in subsection F.4. through F.6. of this section. Nonresidential agricultural accessory buildings that equal or exceed sixty-five thousand dollars may apply for an alteration exception pursuant to K.C.C. 21A.24.070. Nonresidential agricultural accessory buildings that do not meet the elevation standard in subsection F. 1. of this section or the dry flood-proofing standard in subsection F.2. of this section will be assessed at the flood insurance rate based on the risk to which the building is exposed;

4. Use materials and methods that are resistant to and minimize flood damage;

5. Design and construct the areas and rooms below the lowest floor to automatically equalize hydrostatic and hydrodynamic flood forces on exterior walls by allowing for the entry and exit of floodwaters as follows:

a. provide a minimum of two openings on each of two opposite side walls in the direction of flow, with each of those walls having a total open area of not less than one square inch for every square foot of enclosed area subject to flooding;

b. design the bottom of all openings is no higher than one foot above grade; and

c. screens, louvers or other coverings or devices are allowed if they do not restrict entry and exit of floodwaters; and

6. Dry flood proof all electrical, heating, ventilation, plumbing, air conditioning equipment and other utility and service facilities to, or elevated above, the flood protection elevation;

G. Anchor all new construction and substantially improved structures to prevent flotation, collapse or lateral movement of the structure. The department shall approve the method used to anchor the new construction;

H. Newly sited manufactured homes and substantial improvements of existing manufactured homes shall meet the following standards:

1. Manufactured homes shall meet all the standards in this section for residential structures and the following standards:

a. anchor all manufactured homes; and

b. install manufactured homes using methods and practices that minimize flood damage;

2. All manufactured homes within a new mobile home park or expansion of an existing mobile home park must meet the requirements for flood hazard protection for residential structures; and

3. Only manufactured homes are allowed in a new or existing mobile home park located in a flood hazard area;

I. Public and private utilities shall meet the following standards:

1. Dry flood-proof new and replacement utilities including, but not limited to, sewage treatment and storage facilities, to, or elevate above, the flood protection elevation;

2. Locate new on-site sewage disposal systems outside the floodplain. When there is insufficient area outside the floodplain, new on-site sewage disposal systems are

allowed only in the zero-rise flood fringe. Locate on-site sewage disposal systems in the zero-rise flood fringe to avoid:

a. impairment to the system during flooding;

b. contamination from the system during flooding;

3. Design all new and replacement water supply systems to minimize or eliminate infiltration of floodwaters into the system;

4. Above-ground utility transmission lines, except for electric transmission lines, are allowed only for the transport of nonhazardous substances; and

5. Bury underground utility transmission lines transporting hazardous substances at a minimum depth of four feet below the maximum depth of scour for the base flood, as predicted by a civil engineer, and achieve sufficient negative buoyancy so that any potential for flotation or upward migration is eliminated;

J. Critical facilities are allowed within the zero-rise flood fringe only when a feasible alternative site is not available and the following standards are met:

1. Elevate the lowest floor to the five-hundred year floodplain elevation or three or more feet above the base flood elevation, whichever is higher;

2. Dry flood-proof and seal structures to ensure that hazardous substances are not displaced by or released into floodwaters; and

3. Elevate access routes to or above the base flood elevation from the critical facility to the nearest maintained public street or roadway;

K. New construction or expansion of existing farm pads is allowed only on a site with existing agriculture if emergency flood relief is required for the protection of livestock or assets or for operations that must continue during flood events as follows:

1. A farm pad is allowed only if there is no other suitable holding area on the site outside the floodplain;

2. Construct the farm pad to the standards in an approved farm management plan prepared in accordance with K.C.C. 21A.24.051 and K.C.C. chapter 21A.30.

3. The farm pad proposal shall demonstrate compliance with the following:

a. flood storage compensation consistent with subsection A. of this section;

b. siting and sizing that do not increase base flood elevations consistent with K.C.C. 21A.24.250.B.;

c. siting that is located in the area least subject to risk from floodwaters; and

d. an alternatives analysis demonstrating adverse impacts to wetlands, wetland buffers and aquatic area buffers have been minimized;

4. The farm pad is constructed to base flood elevation plus one-foot. An elevation report shall be completed after construction to demonstrate compliance with that elevation requirement;

5.a. The farm pad should be sized as is necessary for the protection of livestock and assets and operations that must continue during flood events;

b. for farm pads larger than two thousand square feet of finished usable surface, a site specific evaluation of agricultural operations must demonstrate the need for the size of the pad; and

c. for farm pads larger than ten thousand square feet, an area-wide analysis must demonstrate that sufficient flood storage is available for reasonably foreseeable future land use needs in the vicinity;

6. Nonresidential agricultural buildings are allowed on a farm pad as shelter for livestock or other farm animals, greenhouses for plant starts to be used on the property, milking parlors, storage of farm vehicles and agricultural equipment and shelter for farm products including, but not limited to, feed, seeds, flower bulbs and hay and farm operations that must continue during a flood event. Nonresidential structures allowed on a farm pad shall not be used for retail operations or any residential or public use; and

7. The property owner shall file with the department of executive services, records and licensing services division, a notice approved by the department that restricts the use of the farm pad to nonresidential agricultural uses. The notice shall run with the land. The applicant shall submit to the department proof that the notice was filed before the department approves any permit for the construction of the farm pad;

L. New construction or expansion of existing livestock manure storage facilities is only allowed as follows:

1. The livestock manure storage facility is only allowed if there is not a feasible alternative area on the site outside the floodplain;

2. Construct the livestock manure storage facility to the standards in an approved farm management plan prepared in accordance with K.C.C. 21A.24.051 and K.C.C. chapter 21A.30. The farm management plan shall demonstrate compliance with the following:

a. flood storage compensation consistent with subsection A. of this section;

b. siting and sizing that do not increase base flood elevations consistent with K.C.C. 21A.24.250.B. and 21A.24.260.D;

c. dry flood-proofing liquid manure storage facility to one foot above the base flood elevation; and

d. siting that is located in the area least subject to risk from floodwaters; and

M. Recreational vehicles must be on site for fewer than one hundred eighty days or be fully licensed and ready for highway use. (Ord. 17841 § 40, 2014: Ord. 17539 § 52, 2013: Ord. 16686 § 3, 2009: Ord. 16267 § 44, 2008: Ord. 16172 § 4, 2008: Ord. 15051 § 162, 2004: Ord. 11621 § 76, 1994: Ord. 10870 § 471, 1993).

***Reviser's note: Ordinance 17539, Sections 44, 45, 46, 52, 53, 55 and 57, do not apply in the shoreline jurisdiction until the effective date of the Washington state Department of Ecology's approval of the amendments as provided in RCW 90.58.090 and K.C.C. 20.12.205.**

21A.24.250 Zero-rise floodway — development standards and alterations. The following development standards apply to development proposals and alterations on sites within the zero-rise floodway:

A. The development standards that apply to the zero-rise flood fringe also apply to the zero-rise floodway. The more restrictive requirements shall apply where there is a conflict;

B. A development proposal shall not increase the base flood elevation except as follows:

1. Revisions to the Flood Insurance Rate Map are approved by FEMA, in accordance with 44 CFR 70, to incorporate the increase in the base flood elevation; and

2. Appropriate legal documents are prepared and recorded in which all property owners affected by the increased flood elevations consent to the impacts on their property;

C. If post and piling construction techniques are used, the following are presumed to produce no increase in the base flood elevation and a critical areas report is not required to establish this fact:

1. New residential structures outside the FEMA floodway on lots in existence before November 27, 1990, that contain less than five thousand square feet of buildable land outside the zero-rise floodway if the total building footprint of all existing and proposed structures on the lot does not exceed two-thousand square feet;

2. Substantial improvements of existing residential structures in the zero-rise floodway, but outside the FEMA floodway, if the footprint is not increased; or

3. Substantial improvements of existing residential structures that meet the standards for new residential structures in K.C.C. 21A.24.240.E;

D. When post or piling construction techniques are not used, a critical areas report is required in accordance with K.C.C. 21A.24.110 demonstrating that the proposal will not increase the base flood elevation;

E. During the flood season from September 30 to May 1 the following are not allowed to be located in the zero-rise floodway;

1. All temporary seasonal shelters, such as tents, awnings and greenhouses, except for those used for agricultural activities and domestic household use; and

2. Staging or stockpiling of equipment, materials or substances that the director determines may be hazardous to the public health, safety or welfare except for those used for agricultural activities and domestic household use;

F. New residential structures and substantial improvements to existing residential structures or any structure accessory to a residential use shall meet the following standards:

1. Locate the structures outside the FEMA floodway;

2. Locate the structures only on lots in existence before November 27, 1990, that contain less than five thousand square feet of buildable land outside the zero-rise floodway; and

3. To the maximum extent practical, locate the structures the farthest distance from the channel, unless the applicant can demonstrate that an alternative location is less subject to risk;

G. Public and private utilities are only allowed if:

1. The department determines that a feasible alternative site is not available;

2. A waiver is granted by the Seattle-King County department of public health for new on-site sewage disposal facilities;

3. The utilities are dry flood-proofed to or elevated above the flood protection elevation;

4. Above-ground utility transmission lines, except for electrical transmission lines, are only allowed for the transport of nonhazardous substances; and

5. Underground utility transmission lines transporting hazardous substances are buried at a minimum depth of four feet below the maximum dept of scour for the base flood, as predicted by a civil engineer, and achieve sufficient negative buoyancy so that any potential for flotation or upward migration is eliminated;

H. Critical facilities, except for those listed in subsection I. of this section are not allowed within the zero-rise floodway; and

I. Structures and installations that are dependent upon the zero-rise floodway are allowed in the zero-rise floodway if the development proposal is approved by all agencies with jurisdiction and meets the development standards for the zero-rise floodway. These structures and installations may include, but are not limited to:

1. Dams or diversions for water supply, flood control, hydroelectric production, irrigation or fisheries enhancement;

2. Flood damage reduction facilities, such as levees, revetments and pumping stations;

3. Stream bank stabilization structures only if a feasible alternative does not exist for protecting structures, public roadways, flood protection facilities or sole access routes. Bank stabilization projects must be consistent with the Integrated Streambank Protection Guidelines (Washington State Aquatic Habitat Guidelines Program, 2002) and use bioengineering techniques to the maximum extent practical. An applicant may use alternative methods to the guidelines if the applicant demonstrates that the alternative methods provide equivalent or better structural stabilization, ecological and hydrological functions and salmonid habitat;

4. Surface water conveyance facilities;
5. Boat launches and related recreation structures;
6. Bridge piers and abutments; and
7. Approved aquatic area or wetland restoration projects including, but not limited to, fisheries enhancement projects. (Ord. 16686 § 4, 2009: Ord. 16267 § 45, 2008: Ord. 15051 § 163, 2004: Ord. 10870 § 472, 1993).

21A.24.260 FEMA floodway — development standards and alterations.

A. The development standards that apply to the zero-rise floodway also apply to the FEMA floodway. The more restrictive standards apply where there is a conflict.

B. A development proposal shall not increase the base flood elevation. A civil engineer shall certify, through hydrologic and hydraulic analyses performed in accordance with standard engineering practice, that any proposed encroachment would not result in any increase in flood levels during the occurrence of the base flood discharge.

C. New residential or nonresidential structures are prohibited within the mapped FEMA floodway, except for farm pads and nonresidential agricultural accessory buildings within an agricultural production district that meet applicable compensatory storage and conveyance standards. A residential structure cannot be constructed on fill placed within the mapped FEMA floodway.

D. New livestock manure storage facilities for liquid and slurry manure are prohibited in the FEMA floodway. Existing livestock manure storage facilities may be repaired or enlarged as necessary to comply with the standards in the farm's nutrient management plan;

E. If the footprint of the existing residential structure is not increased, substantial improvements of existing residential structures in the FEMA floodway, meeting the requirements of WAC 173-158-070, as amended, are presumed to not increase the base flood elevation and do not require a critical areas report to establish this fact.

F. Maintenance, repair, replacement or improvement of an existing residential structure located within the agricultural production district on property that is zoned agriculture (A) is allowed in the FEMA floodway if the structure meets the standards for residential structures and utilities in K.C.C. 21A.24.240 and also meets the following requirements:

1. The existing residential structure was legally established;
2. The viability of the farm is dependent upon a residential structure within close proximity to other agricultural structures; and
3. Replacing an existing residential structure within the FEMA floodway is only allowed if:
   a. there is not sufficient buildable area on the site outside the FEMA floodway for the replacement;
   b. the replacement residential structure is not located in an area that increases the flood hazard in water depth, velocity or erosion;
   c. the building footprint of the existing residential structure is not increased; and
   d. the existing structure, including the foundation, is completely removed within ninety days of receiving a certificate of occupancy, or temporary certificate of occupancy, whichever occurs first, for the replacement structure.

G. Maintenance, repair or replacement of a substantially damaged existing residential structure, other than a residential structure located within the agricultural production district on property that is zoned agricultural (A), is allowed in the FEMA floodway if the structure meets the standards for existing residential structures and utilities in K.C.C. 21A.24.240 and also meets the following requirements:

1. The Washington state Department of Ecology has assessed the flood characteristics of the site and determined:

a. base flood depths will not exceed three feet;

b. base flood velocities will not exceed three feet per second;

c. there is no evidence of flood-related erosion, as determined by location of the project site in relationship to mapped channel migration zones or, if the site is not mapped, evidence of overflow channels and bank erosion; and

d. a flood warning system or emergency plan is in operation;

2. The Washington state Department of Ecology has prepared a report of findings and recommendations to the department that determines the repair or replacement will not result in an increased risk of harm to life based on the characteristics of the site;

3. The department has reviewed the Washington state Department of Ecology report and concurs that the development proposal is consistent with the findings and recommendations in the report;

4. The development proposal is consistent with the findings and recommendations of the Washington state Department of Ecology report;

5. The existing residential structure was legally established; and

6. Replacing an existing residential structure within the FEMA floodway is only allowed if:

a. there is not sufficient buildable area on the site outside the FEMA floodway;

b. the replacement structure is a residential structure built as a substitute for a previously existing residential structure of equivalent use and size; and

c. the existing residential structure, including the foundation, is removed within ninety days of receiving a certificate of occupancy, or temporary certificate of occupancy, whichever occurs first, for the replacement structure.

H. Maintenance or repair of a structure, as defined in WAC 173-158-030, that is identified as a historic resource, as defined in K.C.C. 21A.06.597, is allowed in the FEMA floodway if the structure and utilities meet the standards of K.C.C. 21A.24.240 for residential structures or nonresidential structures, as appropriate. (Ord. 17539 § 53, 2013: Ord. 16267 § 46, 2008: Ord. 16172 § 5, 2008: Ord. 15051 § 164, 2004: Ord. 10870 § 473, 1993).

***Reviser's note: Ordinance 17539, Sections 44, 45, 46, 52, 53, 55 and 57, do not apply in the shoreline jurisdiction until the effective date of the Washington state Department of Ecology's approval of the amendments as provided in RCW 90.58.090 and K.C.C. 20.12.205.**

21A.24.270 Flood hazard areas — certification by land surveyor.

A. For all new structures or substantial improvements in a flood hazard area, the applicant shall provide a FEMA elevation certificate completed by a land surveyor licensed by the state of Washington documenting:

1. The actual as-built elevation of the lowest floor, including basement;

2. The actual as-built elevation to which the structure is dry flood-proofed, if applicable; and

3. If the structure has a basement.

B. The applicant shall submit a FEMA elevation certificate before the issuance of a certificate of occupancy or temporary certificate of occupancy, whichever occurs first. For unoccupied structures, the applicant shall submit the FEMA elevation certificate before the issuance of the final letter of completion or temporary letter of completion, whichever occurs first.

C. The department shall maintain the certifications required by this section for public inspection and for certification under the National Flood Insurance Program. (Ord. 16686 § 5, 2009: Ord. 15051 § 165, 2004: Ord. 10870 § 474, 1993).

21A.24.2705 Flood hazard areas - appeals of actions alleging alterations without permits. In an appeal of a code enforcement action taken by the department under K.C.C. Title 23 that alleges an alteration within the flood hazard area without a required permit, proof by the department by a preponderance of the evidence that the alteration occurred within any one component of the flood hazard area shall be sufficient to sustain the allegation. A finding under this section that an alteration has occurred in the flood hazard area shall not estop the department from delineating a different flood hazard area under K.C.C. 21A.24.230 during review of a development proposal. (Ord. 17841 § 42, 2014).

21A.24.271 Floodplain development permit. Before initiating any new floodplain development, the person proposing the development shall obtain a floodplain development permit from King County. The specific details on the floodplain permit process for activities exempt from other King County permits as well as how to coordinate floodplain development review into other King County permit reviews will be established in a public rule. Exceptions to other permit requirements do not apply to floodplain development. (Ord. 17539 § 54, 2013).

21A.24.272 Coastal high hazard areas - development standards - exceptions to flood hazard standards. Within coastal high hazard areas the following applies:

A. All buildings and substantial improvements to existing buildings shall be elevated on pilings and columns so that:

1. The bottom of the lowest horizontal structural member of the lowest floor, excluding the pilings or columns, is elevated to the flood protection elevation; and

2. The pile or column foundation and building attached thereto is anchored to resist flotation, collapse and lateral movement due to the effects of wind and water loads acting simultaneously on all building components. Wind and water loading values shall each have a one percent chance of being equaled or exceeded in any given year;

B. A registered professional engineer or architect licensed by the state of Washington shall prepare the structural design, specifications and plans for the building, and shall certify that the design and methods of construction to be used are in accordance with accepted standards of practice for meeting the provisions of subsection A. of this section;

C. The applicant shall provide a FEMA elevation certificate completed by a land surveyor licensed by the state of Washington documenting the elevation of the bottom of the lowest structural member of the lowest floor, excluding pilings and columns, of all new and substantially improved buildings and whether or not such buildings contain a basement. The department shall maintain the FEMA elevation certificates required by this section for public inspection and for certification under the National Flood Insurance Program;

D. All buildings shall be located landward of the reach of mean high tide;

E. All buildings and substantial improvements to existing buildings shall maintain the space below the lowest floor free of obstruction. The space can include nonsupporting open wood lattice-work or insect screening that is intended to collapse under wind and wave loads without causing collapse, displacement or other structural damage to the elevated portion of the building or supporting foundation system. The space below the lowest floor can be used only for parking of vehicles, building access or storage. The space shall not be used for human habitation;

F. Fill for structural support of buildings is prohibited;

G. All manufactured homes to be placed or substantially improved within coastal high hazard areas shall meet the standards in subsections A. through F. of this section;

H. Recreational vehicles placed on sites within zones V1-30, VE and V and adjacent AE, AO and AH zones must either:

1. Be on the site for fewer than one hundred eighty consecutive days; or

2. Be fully licensed and ready for highway use, on their wheels or jacking system, attached to the site only by quick disconnect type utilities and security devices, and have no permanently attached additions; and

I. The flood hazard standards in K.C.C. 21A.24.230 through 21A.24.270 do not apply to coastal high hazard areas. (Ord. 17173 § 2, 2011).

21A.24.274 Channel migration - adoption of criteria, studies and maps - study delineating channel migration zone and component channel migration hazard areas.

A. The department and the department of natural resources and parks, by public rule, shall adopt:

1. Criteria for channel migration designation, classification and mapping, taking into consideration, at a minimum, Washington state Department of Ecology channel migration zone mapping guidelines; and

2. Channel migration zone studies and channel migration zone maps.

B. The channel migration zone and its component channel migration hazard areas shall be delineated in a channel migration zone study that is the basis for each channel migration zone map.

C. The channel migration zone study:

1. Shall evaluate evidence of historical channel locations and movement, basin-scale physical characteristics, current channel conditions and other relevant factors in order to delineate the channel migration zone;

2. Shall include the present channel within the channel migration zone;

3. Shall determine the extent of channel migration hazard areas within the channel migration zone; and

4. May exclude areas from the channel migration zone that lie behind a lawfully established flood protection structure that is maintained by existing programs for public maintenance, transportation infrastructure, or other constructed feature if it is built above the elevation of the one hundred-year flood or if scientific or technical information otherwise demonstrate that the flood protection structure is not within the channel migration zone.

D. An applicant for a development proposal may submit a critical area report to the department to determine channel migration zone boundaries or classify channel migration hazard areas on a specific property if there is an apparent discrepancy between the site-specific conditions or data and the adopted channel migration zone maps. If the department, in consultation with the department of natural resources and parks, based on the adopted criteria for channel migration designation, classification and mapping, determines that there is a discrepancy between the site conditions and the adopted channel migration zone maps, it shall make appropriate revisions to the maps. (Ord. 17841 § 41, 2014: Ord. 17485 §17, 2012).

21A.24.275 Channel migration zones — development standards and alterations. The following development standards apply to development proposal and alterations on sites within channel migration zones that have been mapped and adopted by public rule:

A. The development standards that apply to the aquatic area buffers in K.C.C. 21A.24.365 also apply to the severe channel migration zone and the portion of the

moderate channel migration zone that is within the aquatic area buffer. The more-restrictive standards apply where there is a conflict;

B. Only the alterations identified in K.C.C. 21A.24.045 are allowed within a severe channel migration hazard area; and

C. The following standards apply to development proposals and alterations within the moderate channel migration hazard area:

1. Maintenance, repair or expansion of any use or structure is allowed if the existing structure's footprint is not expanded towards any source of channel migration hazard, unless the applicant can demonstrate that the location is the least subject to risk;

2. New primary dwelling units, accessory dwelling units or accessory living quarters, and required infrastructure, are allowed if:

a. the structure is located on a separate lot in existence on or before February 16, 1995;

b. a feasible alternative location outside of the channel migration hazard area is not available on-site; and

c. to the maximum extent practical, the structure and supporting infrastructure is located the farthest distance from any source of channel migration hazard, unless the applicant can demonstrate that an alternative location is:

(1) the least subject to risk; or

(2) within the outer third of the moderate channel migration hazard area as measured perpendicular to the channel;

3. New accessory structures are allowed if:

a. a feasible alternative location is not available on-site; and

b. to the maximum extent practical, the structure is located the farthest distance from the migrating channel; and

4. The subdivision of property is allowed within the portion of a moderate channel migration hazard area located outside an aquatic area buffer if:

a. All lots contain five-thousand square feet or more of buildable land outside of the moderate channel migration hazard area;

b. Access to all lots does not cross the moderate channel migration hazard area; and

c. All infrastructure is located outside the moderate channel migration hazard area except that an on-site septic system is allowed in the moderate channel migration hazard area if:

(1) a feasible alternative location is not available on-site; and

(2) to the maximum extent practical, the septic system is located the farthest distance from the migrating channel. (Ord. 16985 § 123, 2010: Ord. 15051 § 166, 2004: Ord. 11621 § 75, 1994).

21A.24.280 Landslide hazard areas — development standards and alterations. The following development standards apply to development proposals and alterations on sites containing landslide hazard areas:

A. Unless allowed as an alteration exception under K.C.C. 21A.24.070, only the alterations identified in K.C.C. 21A.24.045 are allowed within a landslide hazard area with a slope of forty percent or greater;

B. A buffer is required from all edges of the landslide hazard area. To eliminate or minimize the risk of property damage or injury resulting from landslides caused in whole or part by the development, the department shall determine the size of the buffer based upon a critical area report prepared by a geotechnical engineer or geologist. If a critical area report is not submitted to the department, the minimum buffer is fifty feet. If the landslide hazard area has a vertical rise of more than two-hundred feet, the department may increase the minimum building setback in K. C. C. 21A.24.200 to one-hundred feet;

C. Unless otherwise provided in K.C.C. 21A.24.045 or as a necessary part of an allowed alteration, removal of any vegetation from a landslide hazard area or buffer is prohibited;

D. All alterations shall minimize disturbance to the landslide hazard area, slope and vegetation unless necessary for slope stabilization; and

E. Alterations in a landslide hazard area located on a slope less than forty percent are allowed if:

1. The proposed alteration will not decrease slope stability on contiguous properties; and

2. The risk of property damage or injury resulting from landsliding is eliminated or minimized. (Ord. 15051 § 167, 2004: Ord. 12822 § 9, 1997: Ord. 10870 § 475, 1993).

21A.24.290 Seismic hazard areas — development standards and alterations. The following development standards apply to development proposals and alterations on sites containing seismic hazard areas:

A. The department may approve alterations to seismic hazard areas only if:

1. The evaluation of site-specific subsurface conditions shows that the proposed development site is not located in a seismic hazard area; or

2. The applicant implements appropriate engineering design based on the best available engineering and geological practices that either eliminates or minimizes the risk of structural damage or injury resulting from seismically induced settlement or soil liquefaction; and

B. The department may waive or reduce engineering study and design requirements for alterations in seismic hazard areas for:

1. Mobile homes;

2. Additions or alterations that do not increase occupancy or significantly affect the risk of structural damage or injury; and

3. One story buildings with less than two-thousand-five hundreds square feet of floor area or roof area, whichever is greater, and that are not dwelling units or used as places of employment or public assembly. (Ord. 16267 § 47, 2008: Ord. 15051 § 168, 2004: Ord. 10870 § 476, 1993).

21A.24.300 Volcanic hazard areas — development standards and alterations. The following development standards apply to development proposal and alterations on sites containing volcanic hazard areas:

A. Within volcanic hazard areas located along the White river upstream from Mud Mountain dam:

1. Critical facilities, apartments, townhouses or commercial structures are not allowed;

2. All new lots created by subdivision, short subdivision or binding site plan shall designate building areas and building setbacks outside of the volcanic hazard area; and

3. The notice of critical areas required under this chapter is required for new single detached dwellings on existing lots;

B. Within volcanic hazard areas located along the White river downstream from Mud Mountain dam and the Green and Duwamish rivers, the department shall evaluate development proposals for critical facilities for risk of inundation or flooding resulting from mudflows originating on Mount Rainier. The applicant shall design critical facilities to withstand, without damage, the effects of mudflows equal in magnitude to the prehistoric Electron mudflow; and

C. This section does not apply until King County has refined the mapping of volcanic hazard areas in cooperation with the United State Geological Survey and

adopted volcanic hazard area maps by public rule. (Ord. 17539 § 55, 2013: Ord. 15051 § 169, 2004: Ord. 10870 § 477, 1993).

***Reviser's note: Ordinance 17539, Sections 44, 45, 46, 52, 53, 55 and 57, do not apply in the shoreline jurisdiction until the effective date of the Washington state Department of Ecology's approval of the amendments as provided in RCW 90.58.090 and K.C.C. 20.12.205.**

21A.24.310 Steep slope hazard areas — development standards and alterations. The following development standards apply to development proposals and alterations on sites containing steep slope hazard areas:

A. Except as provided in subsection D. of this section, unless allowed as an alteration exception under K.C.C. 21A.24.070, only the alterations identified in K.C.C. 21A.24.045 are allowed within a steep slope hazard area;

B. A buffer is required from all edges of the steep slope hazard area. To eliminate or minimize the risk of property damage or injury resulting from slope instability, landsliding or erosion caused in whole or part by the development, the department shall determine the size of the buffer based upon a critical area report prepared by a geotechnical engineer or geologist. If a critical area report is not submitted to the department, the minimum buffer is fifty feet. For building permits for single detached dwelling units only, the department may waive the special study requirement and authorize buffer reductions if the department determines that the reduction will adequately protect the proposed development and the critical area; and

C. Unless otherwise provided in K.C.C. 21A.24.045 or as a necessary part of an allowed alteration, removal of any vegetation from a steep slope hazard area or buffer is prohibited;

D. All alterations are allowed in the following circumstance:

1. Slopes which are forty percent or steeper with a vertical elevation change of up to twenty feet if no adverse impact will result from the exemption based on King County's review of and concurrence with a soils report prepared by a geologist or geotechnical engineer; and

2. The approved regrading of any slope which was created through previous legal grading activities. Any slope which remains forty percent or steeper following site development shall be subject to all requirements for steep slopes. (Ord. 15051 § 170, 2004: Ord. 13190 § 21, 1998: Ord. 11621 § 77, 1994: Ord. 11273 § 5, 1994: Ord. 10870 § 478, 1993).

21A.24.311 Critical aquifer recharge areas — map adopted. The map entitled King County Critical Aquifer Recharge Areas, included in Attachment H* to Ordinance 17485, is hereby adopted as the designation of critical aquifer recharge areas in King County in accordance with RCW 36.70A.170. (Ord. 17485 § 21, 2012: Ord. 16267 § 48, 2008: Ord. 15051 § 172, 2004: Ord. 11481 § 2, 1994. Formerly K.C.C. 20.70.020).

***Available in the King County Archives.**

21A.24.312 Critical aquifer recharge areas — reclassification or declassification. Upon application supported by a critical areas report that includes a hydrogeologic site evaluation, the department, in consultation with the department of natural resources and parks, may determine that an area that is or is not classified as a critical aquifer recharge area on the map adopted under K.C.C. 21A.24.311:

A. Does not meet the criteria for a critical aquifer recharge area and declassify that area if it is classified as a critical aquifer recharge area;

B. Has the wrong critical aquifer recharge area classification and determine the correct classification; or

C. Has not been classified as a critical aquifer recharge area and should be so classified based on the standards of K.C.C. 21A.24.313. (Ord. 16267 § 49, 2008: Ord. 15051 § 173, 2004).

21A.24.313 Critical aquifer recharge areas — categories. Critical aquifer recharge areas are categorized as follows:

A. Category I critical aquifer recharge areas include those mapped areas that King County has determined are:

1. Highly susceptible to groundwater contamination and that are located within a sole source aquifer or a wellhead protection area; or

2. In an area where hydrogeologic mapping or a numerical flow transport model in a Washington department of health approved wellhead protection plan demonstrate that the area is within the one year time of travel to a wellhead for a Group A water system;

B. Category II critical aquifer recharge areas include those mapped areas that King County has determined:

1. Have a medium susceptibility to ground water contamination and are located in a sole source aquifer or a wellhead protection area; or

2. Are highly susceptible to groundwater contamination and are not located in a sole source aquifer or wellhead protection area; and

C. Category III critical aquifer recharge areas include those mapped areas that King County has determined have low susceptibility to groundwater contamination and are located over an aquifer underlying an island that is surrounded by saltwater. (Ord. 16267 § 50, 2008: Ord. 15051 § 174, 2004).

21A.24.314 Critical aquifer recharge areas — King County Code provisions adopted — Washington state underground tank provisions implemented. To protect critical aquifer recharge areas, in accordance with chapter 36.70A RCW, the following provisions of the King County Code are determined to protect critical aquifer recharge areas: K.C.C. chapters 9.04, 9.12, 16.82, 21A.06, 21A.16, 21A.22 and 21A.24 and K.C.C. 17.04.010. For the purposes of RCW 90.76.040, King County declares critical aquifer recharge areas to be environmentally sensitive areas. (Ord. 16852 § 2, 2010: Ord. 15051 § 176, 2004: Ord. 11481 §§ 3, 5, 1994. Formerly K.C.C. 20.70.030).

21A.24.315 Board of Health regulations adopted. The following Titles of the Code of King County Board of Health are hereby adopted in accordance with RCW 36.70A.060 to protect critical aquifer recharge areas: Title 10 "King County Solid Waste Regulations", Title 12 "King County Public Water System Rules and Regulations", and Title 13 "On-Site Sewage Disposal Systems." (Ord. 15051 § 177, 2004: Ord. 11481 § 4, 1994. Formerly K.C.C. 20.70.040).

21A.24.316 Critical aquifer recharge areas — development standards. The following development standards apply to development proposals and alterations on sites containing critical aquifer recharge areas:

A. Except as otherwise provided in subsection H. of this section, the following new development proposals and alterations are not allowed on a site located in a category I critical aquifer recharge area:

1. Transmission pipelines carrying petroleum or petroleum products;

2. Sand and gravel, and hard rock mining unless:

a. the site has mineral zoning as of January 1, 2005; or

b. mining is a permitted use on the site and the critical aquifer recharge area was mapped after the date a complete application for mineral extraction on the site was filed with the department;

3. Mining of any type below the upper surface of the saturated ground water that could be used for potable water supply;

4. Disposal of radioactive wastes, as defined in chapter 43.200 RCW;

5. Hydrocarbon extraction;

6. Commercial wood treatment facilities on permeable surfaces;

7. Underground storage tanks, including tanks that are exempt from the requirements of chapter 173 WAC, with hazardous substances, as defined in chapter 70.105 RCW, that do not comply with standards of chapter 173-360 WAC and K.C.C. Title 17;

8. Above-ground storage tanks for hazardous substances, as defined in chapter 70.105 RCW, unless protected with primary and secondary containment areas and a spill protection plan;

9. Golf courses;

10. Cemeteries;

11. Wrecking yards;

12. Landfills for hazardous waste, municipal solid waste or special waste, as defined in K.C.C. chapter 10.04; and

13. On lots smaller than one acre, an on-site septic system, unless:

a. the system is approved by the Washington state Department of Health and has been listed by the Washington State Department of Health as meeting treatment standard N as provided in WAC chapter 426-172A*; or

b. the Seattle-King County department of public health determines that the systems required under subsection A.13.a. of this section will not function on the site.

B. Except as otherwise provided in subsection H. of this section, the following new development proposals and alterations are not allowed on a site located in a category II critical aquifer recharge area:

1. Mining of any type below the upper surface of the saturated ground water that could be used for potable water supply;

2. Disposal of radioactive wastes, as defined in chapter 43.200 RCW;

3. Hydrocarbon extraction;

4. Commercial wood treatment facilities located on permeable surfaces;

5.a. Except for a category II critical aquifer recharge area located over an aquifer underlying an island that is surrounded by saltwater, underground storage tanks with hazardous substances, as defined in chapter 70.105 RCW, that do not meet the requirements of chapter 173-360 WAC and K.C.C. Title 17; and

b. For a category II critical aquifer recharge area located over an aquifer underlying an island that is surrounded by saltwater, underground storage tanks, including underground storage tanks exempt from the requirements of chapter 173-360 WAC, with hazardous substances, as defined in chapter 70.105 RCW, that do not comply with the standards in chapter 173-360 WAC and K.C.C. Title 17;

6. Above-ground storage tanks for hazardous substances, as defined in chapter 70.105 RCW, unless protected with primary and secondary containment areas and a spill protection plan;

7. Wrecking yards;

8. Landfills for hazardous waste, municipal solid waste, or special waste, as defined in K.C.C. chapter 10.04; and

9. On lots smaller than one acre, an on-site septic systems, unless:

a. the system is approved by the Washington state Department of Health and has been listed by the Washington state Department of Health as meeting treatment standard N as provided in WAC chapter 426-172A*; or

b. the Seattle-King County department of public health determines that the systems required under subsection B.9.a. of this section will not function on the site.

C. Except as otherwise provided in subsection H. of this section, the following new development proposals and alterations are not allowed on a site located in a category III critical aquifer recharge area:

1. Disposal of radioactive wastes, as defined in chapter 43.200 RCW;

2. Hydrocarbon extraction;

3. Commercial wood treatment facilities located on permeable surfaces;

4. Underground storage tanks, including tanks exempt from the requirements of chapter 173-360 WAC, with hazardous substances, as defined in chapter 70.105 RCW, that do not comply with the requirements of chapter 173-360 WAC and K.C.C. Title 17;

5. Above ground storage tanks for hazardous substances, as defined in chapter 70.105 RCW, unless protected with primary and secondary containment areas and a spill protection plan;

6. Wrecking yards; and

7. Landfills for hazardous waste, municipal solid waste, or special waste, as defined in K.C.C. chapter 10.04.

D. The following standards apply to development proposals and alterations that are substantial improvements on a site located in a critical aquifer recharge area:

1. The owner of an underground storage tank, including a tank that is exempt from the requirements of chapter 173 WAC, in a category I or III critical aquifer recharge area or a category II critical aquifer recharge area located over an aquifer underlying an island that is surrounded by saltwater shall either bring the tank into compliance with the standards of chapter 173 WAC and K.C.C. Title 17 or properly decommission or remove the tank; and

2. The owner of an underground storage tank in a category II critical aquifer recharge area not located on located over an aquifer underlying an island that is surrounded by saltwater shall bring the tank into compliance with the standards of chapter 173-360 WAC and K.C.C. Title 17 or shall properly decommission or remove the tank.

E. In any critical aquifer recharge area, the property owner shall properly decommission an abandoned well.

F. On a site located in a critical aquifer recharge area within the urban growth area, a development proposal for new residential development, including, but not limited to, a subdivision, short subdivision, or dwelling unit, shall incorporate best management practices included in the King County Surface Water Design Manual into the site design in order to infiltrate stormwater runoff to the maximum extent practical.

G. On an island surround by saltwater, the owner of a new well located within two hundred feet of the ordinary high water mark of the marine shoreline and within a critical aquifer recharge area shall test the well for chloride levels using testing protocols approved by the Washington state Department of Health. The owner shall report the results of the test to Seattle-King County department of public health and to the department of natural resources and parks. If the test results indicate saltwater intrusion is likely to occur, the department of natural resources and parks, in consultation with Seattle-King County department of public health, shall recommend appropriate measures to prevent saltwater intrusion.

H. On a site greater than twenty acres, the department may approve a development proposal otherwise prohibited by subsections A., B. and C. of this section if the applicant demonstrates through a critical areas report that the development proposal

is located outside the critical aquifer recharge area and that the development proposal will not cause a significant adverse environmental impact to the critical aquifer recharge area.

I. The provisions relating to underground storage tanks in subsections A. through D. of this section apply only when the proposed regulation of underground storage tanks has been submitted to and approved by the Washington state department of ecology, in accordance with 90.76.040 RCW and WAC 173-360-530. (Ord. 16267 § 51, 2008: Ord. 15051 § 179, 2004).

***Reviser's note: The reference to WAC chapter 426-172A is erroneous. WAC chapter 246.272A was apparently intended.**

21A.24.318 Wetlands — categories.

A. Wetlands are classified into category I, category II, category III and category IV based on the adopted Washington State Wetland Rating System for Western Washington, Washington state department of ecology publication number 04-06-025, published August 2004.

B. Wetland rating categories shall not recognize illegal modifications. (Ord. 15051 § 183, 2004).

21A.24.325 Wetlands — buffers. Except as otherwise provided in this section, buffers shall be provided from the wetland edge as follows:

A. In the Urban Growth Area, buffers for wetlands shall be established in accordance with the following standards:

1. The standard buffer widths of the following table shall apply unless modified in accordance with subsection A.2, A.3, C. or D. of this section:

WETLAND CATEGORY AND CHARACTERISTICS	**BUFFER**
Category I	
Natural Heritage Wetlands	215 feet
Bog	215 feet
Estuarine	175 feet
Coastal Lagoon	175 feet
Habitat score from 31 to 36 points	225 feet
Habitat score from 20 to 30 points	150 feet plus 7.5 feet for each habitat score point above 20 points
Category I wetlands not meeting any of the criteria above	125 feet
Category II	
Estuarine	135 feet
Habitat score from 31 to 36 points	200 feet
Habitat score from 20 to 30 points	125 feet plus 7.5 feet for each habitat score point above 20 points
Category II wetlands not meeting any of the criteria above	100 feet
Category III	
Habitat score from 20 to 28 points	125 feet
Category III wetlands not meeting any of the criteria above	75 feet
Category IV	50 feet

2. If a Category I or II wetland with habitat score greater than twenty points is located within three hundred feet of a priority habitat area as defined by the Washington state Department of Fish and Wildlife, the buffer established by subsection A.1. of this section shall be increased by fifty feet unless:

a.(i) the applicant provides relatively undisturbed vegetated corridor at least one hundred feet wide between the wetland and all priority habitat areas located within three hundred feet of the wetland. The corridor shall be protected for the entire distance between the wetland and the priority habitat through a conservation easement, native growth protection easement or the equivalent; and

(ii) the applicable mitigation measures in subsection A.3.b. of this section are provided; or

b. the wetland is a freshwater or deep freshwater wetland; and

3. Buffers calculated in accordance with subsection A.1. and A.2. of this section shall be reduced as follows:

a. Buffers for all categories of wetlands shall be reduced by twenty-five feet if the applicant implements all applicable mitigation measures identified in subsection A.3.b. of this section, or if the applicant proposes alternate mitigation to reduce the impacts of the development and the department determines the alternative provides equivalent mitigation.

b. The following mitigation measures may be used by an applicant to obtain a reduced buffer width under subsection A.1. of this section:

Disturbance	**Measures to minimize impacts**	**Activities that may cause the disturbance**
Lights	Direct lights away from wetland	Parking lots, warehouses, manufacturing, high density residential
Noise	Place activity that generates noise away from the wetland.	manufacturing, high density residential
Toxic runoff	Route all new untreated runoff away from wetland, or Covenants limiting use of pesticides within 150 ft of wetland, or Implement integrated pest management program	Parking lots, roads, manufacturing, residential areas, application of agricultural pesticides, landscaping
Change in water regime	Infiltrate or treat, detain and disperse into buffer new runoff from impervious surfaces using low impact development measures identified in the King County Surface Water Design Manual	Any impermeable surface, lawns, tilling
Pets and Human disturbance	Privacy fencing or landscaping to delineate buffer edge and to discourage disturbance of wildlife by humans and pets	Residential areas
Dust	BMP’s for dust	Tilled fields

Degraded buffer condition	Nonnative plants to be removed and replaced with native vegetation per an approved landscaping plan to be bonded and monitored for a three year period after completion to assure at least 80% survival of plantings	All activities potentially requiring buffers

B. For a wetland located outside the Urban Growth Area:

1. The buffers shown on the following table apply unless modified in accordance with subsections C. and D. of this section:

WETLAND CATEGORY AND CHARACTERISTICS	INTENSITY OF IMPACT OF ADJACENT LAND USE		
	HIGH IMPACT	MODERATE IMPACT	LOW IMPACT
Category I			
Category I wetlands not meeting any of the criteria below	100 feet	75 feet	50 feet
Natural Heritage Wetlands	250 feet	190 feet	125 feet
Bog	250 feet	190 feet	125 feet
Estuarine	200 feet	150 feet	100 feet
Coastal Lagoon	200 feet	150 feet	100 feet
Habitat score from 31 to 36 points	300 feet	225 feet	150 feet
Habitat score from 20 to 30 points	150 feet plus 15 feet for each habitat point above 20	110 feet plus 11.5 feet for each habitat point above 20	75 feet plus 7.5 feet for each habitat point above 20
Category II			
Category II wetlands not meeting any of the criteria below	100 feet	75 feet	50 feet
Estuarine	150 feet	110 feet	75 feet
Interdunal	150 feet	110 feet	75 feet
Habitat score from 31 to 36 points	300 feet	225 feet	150 feet
Habitat score from 20 to 30 points	150 feet plus 15 feet for each habitat point above 20	110 feet plus 11.5 feet for each habitat point above 20	75 feet plus 7.5 feet for each habitat point above 20
Category III			
Category III wetlands not meeting any of the criteria below	80 feet	60 feet	40 feet
Habitat score from 20 to 28 points	150 feet	110 feet	75 feet
Category IV	50 feet	40 feet	25 feet

2. For purposes of this subsection B., unless the director determines a lesser level of impact is appropriate based on information provided by the applicant, the intensity of impact of the adjacent land use is determined as follows:

a. high impact includes:

(1) sites zoned commercial or industrial;

(2) commercial or industrial use on a site regardless of the zoning designation;

(3) nonresidential use on a site zoned for residential use;

(4) active recreation use on a site regardless of zoning;

b. moderate impact includes:

(1) residential uses on sites zoned rural residential;

(2) residential use on a site zoned agriculture or forestry; or

(3) agricultural uses without an approved farm management plan; and

c. low impact includes:

(1) forestry use on a site regardless of zoning designation;

(2) passive recreation uses, such as trails, nature viewing areas, fishing and camping areas, and other similar uses that do not require permanent structures, on a site regardless of zoning; or

(3) agricultural uses carried out in accordance with an approved farm management plan.

C. The department may approve a modification of the minimum buffer width required by this section by averaging the buffer width if:

1. The department determines that:

a. the ecological structure and function of the buffer after averaging is equivalent to or greater than the structure and function before averaging; or

b. averaging includes the corridors of a wetland complex; and

2. The resulting buffer meets the following standards:

a. the total area of the buffer after averaging is equivalent to or greater than the area of the buffer before averaging;

b. the additional buffer is contiguous with the standard buffer; and

c. if the buffer width averaging allows a structure or landscaped area to intrude into the area that was buffer area before averaging, the resulting landscaped area shall extend no more than fifteen feet from the edge of the structure's footprint toward the reduced buffer.

D. Wetland buffer widths shall also be subject to modifications under the following special circumstances:

1. For wetlands containing documented habitat for endangered, threatened or species of local importance, the following shall apply:

a. the department shall establish the appropriate buffer, based on a habitat assessment, to ensure that the buffer provides adequate protection for the sensitive species; and

b. the department may apply the buffer increase rules in subsection A.2. of this section, the buffer reduction rules in subsection A.3. of this section and the buffer averaging rules in subsection C. of this section;

2. For a wetland buffer that includes a steep slope hazard area or landslide hazard area, the buffer width is the greater of the buffer width required by the wetland's category in this section or the top of the hazard area; and

3. For a wetland complex located outside the Urban Growth Area established by the King County Comprehensive Plan or located within the Urban Growth Area in a basin designated as "high" on the Basin and Shoreline Conditions Map, which is included as Attachment A to Ordinance 15051*, the buffer width is determined as follows:

a. the buffer width for each individual wetland in the complex is the same width as the buffer width required for the category of wetland;

b. if the buffer of a wetland within the complex does not touch or overlap with at least one other wetland buffer in the complex, a corridor is required from the buffer of that wetland to one other wetland buffer in the complex considering the following factors:

(1) the corridor is designed to support maintaining viable wildlife species that are commonly recognized to exclusively or partially use wetlands and wetland buffers during a critical life cycle stage, such as breeding, rearing or feeding;

(2) the corridor minimizes fragmentation of the wetlands;

(3) higher category wetlands are connected through corridors before lower category wetlands; and

(4) the corridor width is a least twenty-five percent of the length of the corridor, but no less than twenty-five feet in width; and

(5) shorter corridors are preferred over longer corridors;

c. wetlands in a complex that are connected by an aquatic area that flows between the wetlands are not required to be connected through a corridor;

d. the department may exclude a wetland from the wetland complex if the applicant demonstrates that the wetland is unlikely to provide habitat for wildlife species that are commonly recognized to exclusively or partially use wetlands and wetland buffers during a critical life cycle stage, such as breeding, rearing or feeding; and

e. the alterations allowed in a wetland buffer in K.C.C. 21A.24.045 are allowed in corridors subject to the same conditions and requirements as wetland buffers as long as the alteration is designed so as not to disrupt wildlife movement through the corridor; and

4. Where a legally established roadway transects a wetland buffer, the department may approve a modification of the minimum required buffer width to the edge of the roadway if the part of the buffer on the other side of the roadway sought to be reduced:

a. does not provide additional protection of the proposed development or the wetland; and

b. provides insignificant biological, geological or hydrological buffer functions relating to the other portion of the buffer adjacent to the wetland; and

5. If the site has an approved rural stewardship plan under K.C.C. 21A.24.055, the buffer widths shall be established under the rural stewardship plan and shall not exceed the standard for a low impact land use, unless the department determines that a larger buffer is necessary to achieve no net loss of wetland ecological function.

E. The department may approve a modification to the buffers established in subsections A. and B. of this section if the wetland was created or its characterization was upgraded as part of a voluntary enhancement or restoration project.

F. If the site is located within the shoreline jurisdiction, the department shall determine that a proposal to reduce wetland buffers under this section will result in no net loss of shoreline ecological functions. (Ord. 16985 § 124, 2010: Ord. 16950 § 25, 2010: Ord. 16267 § 52, 2008: Ord. 15051 § 185, 2004).

***Available in the King County Archives.**

21A.24.335 Wetlands — development standards and alterations. The following development standards apply to development proposals and alterations on sites containing wetlands or their buffers:

A. Unless allowed as an alteration exception under K.C.C. 21A.24.070, only the alterations identified in K.C.C. 21A.24.045 are allowed in wetlands and wetland buffers;

B. The applicant shall not introduce any plant or wildlife that is not indigenous to the Puget Sound lowland into any wetland or wetland buffer unless authorized by a state or federal permit or approval;

C. A category IV wetland less than two-thousand-five-hundred square feet that is not part of a wetland complex may be altered in accordance with an approved mitigation plan by relocating the wetland into a new wetland, with equivalent or greater functions, or into an existing wetland at the ratios specified in K.C.C. 21A.24.340 based on the type of mitigation measures proposed; and

D. Alterations to category I wetlands containing bogs or fens are limited to K.C.C. 21A.24.045 D.20. and D.52. (Ord. 16267 § 53, 2008: Ord. 15051 § 187, 2004).

21A.24.340 Wetlands — specific mitigation requirements. In addition to the requirements in K.C.C. 21A.24.125 and 21A.24.130, the following applies to mitigation to compensate for the adverse impacts associated with an alteration to a wetland or wetland buffer:

A. Mitigation measures must achieve equivalent or greater wetland functions, including, but not limited to:

1. Habitat complexity, connectivity and other biological functions; and

2. Seasonal hydrological dynamics, as provided in the King County Surface Water Design Manual;

B. The following ratios of area of mitigation to area of alteration apply to mitigation measures for permanent alterations:

1. For alterations to a wetland buffer, a ratio of one to one; and

2. For alterations to a wetland:

Category and type of wetland	**Wetland reestablishment or creation**	**Wetland rehabilitation**	**1:1 Wetland reestablishment or wetland creation (R/C) and wetland enhancement (E)**	**Wetland enhancement only**
Category IV	1.5:1	3:1	1:1 R/C and 2:1 E	6:1
Category III	2:1	4:1	1:1 R/C and 2:1 E	8:1
Category II estuarine	Case-by-case	4:1 rehabilitation of an estuarine wetland	Case-by-case	Case-by-case
All other Category II	3:1	8:1	1:1 R/C and 4:1 E	12:1
Category I forested	6:1	12:1	1:1 R/C and 10:1 E	Case-by-case
Category I based on score for functions	4:1	8:1	1:1 R/C and 6:1 E	Case-by-case
Category I natural heritage site	Not allowed	6:1 rehabilitation of a natural heritage site	Case-by-case	Case-by-case
Category I coastal lagoon	Not allowed	6:1 rehabilitation of a coastal lagoon	Case-by-case	Case-by-case
Category I bog	Not allowed	6:1 rehabilitation of a bog	Case-by-case	Case-by-case
Category I estuarine	Case-by-case	6:1 rehabilitation of an estuarine wetland	Case-by-case	Case-by-case

C. The following ratios of area of mitigation to area of alteration apply to mitigation measures for temporary alterations where wetlands will not be impacted by permanent fill material:

Wetland category	Permanent conversion of forested and shrub wetlands into emergent wetlands			Mitigation for temporal loss of forested and shrub wetlands when the impacted wetlands will be revegetated to forest or shrub communities		
	Enhancement	Rehabilitation	Creation or restoration	Enhancement	Rehabilitation	Creation or restoration
Category I	6:1	4.5:1	3:1	3:1	2:1	1.5:1
Category II	3:1	2:1	1.5:1	1.5:1	1:1	.75:1
Category III	2:1	1.5:1	1:1	1:1	.75:1	.5:1
Category IV	1.5:1	1:1	.75:1	Not applicable	Not applicable	Not applicable

D. The department may increase the mitigation ratios provided in subsections B. and C. of this section under the following circumstances:

1. The department determines there is uncertainty as to the probable success of the proposed restoration or creation;

2. A significant period of time will elapse between the impact caused by the development proposal and the establishment of wetland functions at the mitigation site;

3. The proposed mitigation will result in a lower category wetland or reduced functions relative to the wetland being impacted; or

4. The alteration causing the impact was an unauthorized impact.

E. The department may decrease the mitigation ratios provided in subsections B. and C. of this section under the following circumstances:

1. The applicant demonstrates by documentation submitted by a qualified wetland specialist that the proposed mitigation actions have a very high likelihood of success based on hydrologic data and prior experience;

2. The applicant demonstrates by documentation by a qualified wetland specialist that the proposed actions for compensation will provide functions and values that are significantly greater than the wetland being impacted;

3. The applicant demonstrates that the proposed actions for mitigation have been conducted in advance of the impact caused by the development proposal and that the actions are successful; or

4. In wetlands where several wetland hydrogeomorphic classes, including, but not limited to depressional, slope, riverine and flow through, are found within one delineated boundary, the department may decrease the ratios if:

a. impacts to the wetland are all within an area that has a different hydrogeomorphic class from the one used to establish the category;

b. the category of the area with a different class is lower than that of the entire wetland; and

c. the applicant provides adequate hydrologic and geomorphic data to establish that the boundary between the hydrogeomorphic classes lies outside of the footprint of the impacts.

F. For temporary alterations to a wetland or its buffer that are predominately woody vegetation, the department may require mitigation in addition to restoration of the altered wetland or buffer; and

G. Mitigation of an alteration to a buffer of a wetland that occurs along an aquatic area lake shoreline in accordance with an allowed alteration under this chapter shall include, but is not limited to, on-site revegetation, maintenance and other restoration of the buffer or setback area to the maximum extent practical. (Ord. 16267 § 54, 2008: Ord. 15051 § 188, 2004: Ord. 14045 § 48, 2001: Ord. 13190 § 23, 1998: Ord. 11621 § 79, 1994: Ord. 10870 § 481, 1993).

21A.24.342 Wetlands — agreement to modify mitigation ratios.

A. The department may enter into an agreement with an applicant to establish mitigation ratios to compensate for the adverse impacts to wetlands of the applicant's development proposals that differ from the ratios required by K.C.C. 21A.24.340.B. The agreement shall require that the applicant:

1. Demonstrate with scientifically-valid data that the program implemented by the applicant has achieved long-term success in reducing the risk of failure and temporal loss of function of the applicant's wetland mitigation projects; and

2. Implement a scientifically rigorous mitigation, monitoring and adaptive management program that includes the following elements:

a. a mitigation planning process that requires mitigation plans to be prepared and signed by a qualified wetland specialist. The mitigation planning process shall use the guidelines contained in Washington State Department of Ecology - U.S. Army Corps of Engineers Publication 04-06-013b "Guidance on Wetland Mitigation in Washington State" or an alternative approach acceptable to the department;

b. construction oversight by a qualified wetland specialist;

c. postconstruction monitoring and reporting by experienced and qualified personnel using scientifically rigorous and accepted methodologies to assess whether the mitigation has been installed and whether it meets the approved goals, objectives and performance standards identified in the mitigation plan;

d. ongoing mitigation site maintenance to facilitate the achievement of the approved goals, objectives and performance standards identified in the mitigation plan. Maintenance includes, but not limited to, the removal and control of nonnative

vegetation, replacement of dead or dying planted vegetation and trash and debris removal;

e. financing or funding guarantees for the duration of the mitigation and monitoring program. At a minimum, funding guarantees must be in place until mitigation activities have met the established performance standards and have been approved by the department; and

f. an adaptive management program that requires the evaluation and adjustment of remedial actions contained within the contingency plan developed as part of the mitigation planning process.

B. The mitigation ratios established by the agreement authorized by this section shall be based on data prepared by the applicant regarding the effectiveness of past and ongoing mitigation projects implemented and monitored by the applicant. In establishing the mitigation ratios, the department shall consider:

1. The applicant's demonstrated success in meeting mitigation performance standards for the different types of mitigation, such as re-establishment, creation, rehabilitation, and enhancement; and

2. The hydrogeomorphic classification, such as slope, riverine, depressional and tidal fringe, of the wetland.

C. The applicant may request coordinated review of the agreement with the Washington state Department of Ecology and the United States Army Corps of Engineers. (Ord. 15051 § 189, 2004).

21A.24.345 Specific mitigation requirements — wetland mitigation banking. The department may approve mitigation in advance of unavoidable adverse impacts to wetlands caused by the development activities through an approved wetland mitigation bank. Wetland mitigation banking is not allowed in the agricultural production districts if the purpose is to compensate for filling wetlands for development outside of the agricultural production districts. (Ord. 15051 § 190, 2004: Ord. 14045 § 49, 2001: Ord. 11621 § 72, 1994).

21A.24.355 Aquatic areas — water types.

A. Aquatic areas are categorized or "typed" as follows:

1. Type S waters include all aquatic areas inventoried as "shorelines of the state" under King County's Shoreline Master Program, K.C.C. Title 25, in accordance with chapter 90.58 RCW, including segments of streams where the mean annual flow is more than twenty cubic feet per second, marine shorelines and lakes twenty acres in size or greater;

2. Type F waters include all segments of aquatic areas that are not type S waters and that contain fish or fish habitat, including waters diverted for use by a federal, state or tribal fish hatchery from the point of diversion for one-thousand-five-hundred feet or the entire tributary if the tributary is highly significant for protection of downstream water quality;

3. Type N waters include all segments of aquatic areas that are not type S or F waters and that are physically connected to type S or F waters by an above-ground channel system, stream or wetland; and

4. Type O waters include all segments of aquatic areas that are not type S, F or N waters and that are not physically connected to type S, F or N waters by an above-ground channel system, pipe or culvert, stream or wetland.

B. For the purposes of the water types in subsection A. of this section, an above-ground channel system is considered to be present if the one-hundred year floodplains of both the contributing and receiving waters are connected.

C. The department may determine that an area upstream of a legal human-made barrier is not fish habitat considering the following factors:

1. The human-made barrier is located beneath public infrastructure that is unlikely to be replaced and it is not feasible to remove the barrier without removing the public infrastructure;

2. The human-made barrier is in the Urban Growth Area established by the King County Comprehensive Plan and is located beneath one or more dwelling units and it is not feasible to remove the barrier without removing the dwelling unit;

3. The human-made barrier is located in a subbasin that is not designated "high" on the Basin and Shoreline Conditions Map which is included as Attachment A to Ordinance 15051*; or

4. The human-made barrier is not identified for removal by a public agency or in an adopted watershed plan. (Ord. 16267 § 55, 2008: Ord. 15051 § 192, 2004).

***Available in the King County Archives.**

21A.24.358 Aquatic areas — buffers.

A. Aquatic area buffers shall be measured as follows:

1. From the ordinary high water mark or from the top of bank if the ordinary high water mark cannot be identified;

2. If the aquatic area is located within a mapped severe channel migration area, the aquatic area buffer width shall be the greater of the aquatic area buffer width as measured consistent with subsection A.1. of this section or the outer edge of the severe channel migration area; and

3. If the aquatic area buffer includes a steep slope hazard area or landslide hazard area, the aquatic area buffer width is the greater of either the aquatic area buffer in this section or the top of the hazard area.

B. Within the Urban Growth Area, aquatic area buffers shall be as follows:

1. A type S or F aquatic area buffer is one-hundred-fifteen-feet;

2. A type S or F aquatic area buffer in a basin or shoreline designated as "high" on the Basin and Shoreline Conditions Map is one-hundred-sixty-five-feet;

3. A type N aquatic area buffer is sixty-five-feet; and

4. A type O aquatic area buffer is twenty-five-feet.

C. Outside the Urban Growth Area, aquatic area buffers shall be as follows:

1. A type S or F aquatic area buffer is one-hundred-sixty-five-feet;

2. A type N aquatic area buffer is sixty-five-feet; and

3. A type O aquatic area buffer is twenty-five-feet.

D. Within the Bear Creek drainage basin a type N aquatic area buffer in a designated regionally significant resource area is one-hundred-feet.

E. The department may approve a modification of buffer widths if:

1.a. The department determines that through buffer averaging the ecological structure and function of the resulting buffer is equivalent to or greater than the structure and function before averaging and meets the following standards:

(1) the total area of the buffer is not reduced;

(2) the buffer area is contiguous; and

(3) averaging does not result in the reduction of the minimum buffer for the buffer area waterward of the top of the associated steep slopes or for a severe channel migration hazard area;

b. the applicant demonstrates that the buffer cannot provide certain functions because of soils, geology or topography, in which case the department shall establish a buffers width that protects the remaining ecological functions that the buffer can provide;

c. the site is zoned RA and is subject to an approved rural stewardship plan. In modifying the buffers, the department shall consider factors such as, the basin and shoreline condition, the location of the site within the basin and shoreline, the buffer condition and the amount of clearing;

d. a legally established roadway transects an aquatic area buffer, the roadway edge closest to aquatic area shall be the extent of the buffer, if the part of the buffer on the other side of the roadway provides insignificant biological or hydrological function in relation to the portion of the buffer adjacent to the aquatic area; or

e. the aquatic area is created or its type is changed as a result of enhancement or restoration projects that are not mitigation for a development proposal or alteration; and

2. If the site is located within the shoreline jurisdiction, that no net loss of shoreline ecological functions will result when considering projects that combine reduced buffers and habitat restoration. (Ord. 16985 § 125, 2010: Ord. 16950 § 26, 2010: Ord. 16267 § 56, 2008: Ord. 15051 § 193, 2004).

21A.24.365 Aquatic areas — development standards and alterations. The following development standards apply to development proposals and alterations on sites containing aquatic areas or their buffers:

A. Unless allowed as an alteration exception under K.C.C. 21A.24.070, only the alterations identified in K.C.C. 21A.24.045 are allowed in aquatic areas and aquatic area buffers;

B. Grading for allowed alterations in aquatic area buffers is only allowed from May 1 to October 1. This period may be modified when the department determines it is necessary along marine shorelines to protect critical forage fish and salmonid migration or as provided in K.C.C. 16.82.095;

C. The moisture-holding capacity of the topsoil layer on all areas of the site not covered by impervious surfaces should be maintained by:

1. Minimizing soil compaction, or

2. Reestablishing natural soil structure and the capacity to infiltrate;

D. New structures within an aquatic area buffer should be sited to avoid the creation of future hazard trees and to minimize the impact on groundwater movement; and

E. To the maximum extent practical:

1. The soil duff layer should not be disturbed, but if disturbed, should be redistributed to other areas of the project site where feasible;

2. A spatial connection should be provided between vegetation within and outside the aquatic area buffer to prevent creation of wind throw hazards; and

3. Hazard trees should be retained in aquatic area buffers and either topped or pushed over toward the aquatic area; and

F. If a restoration, enhancement or mitigation project proposes to place large woody debris waterward of the ordinary high water mark of a Type S aquatic area, the applicant shall consider the potential for recreational hazards in project design. (Ord. 16267 § 57, 2008: Ord. 15051 § 195, 2004).

21A.24.380 Aquatic areas — specific mitigation requirements. In addition the requirements in K.C.C. 21A.24.130, 21A.24.125 and 21A.24.133, the following applies to mitigation to compensate for the adverse impacts associated with an alteration to an aquatic area or aquatic area buffer:

A. Mitigation measures must achieve equivalent or greater aquatic area functions including, but not limited to:

1. Habitat complexity, connectivity and other biological functions;

2. Seasonal hydrological dynamics, water storage capacity and water quality; and

3. Geomorphic and habitat processes and functions;

B. To the maximum extent practical, permanent alterations that require restoration or enhancement of the altered aquatic area, aquatic area buffer or another aquatic area or aquatic area buffer must consider the following design factors, as applicable to the function being mitigated:

1. The natural channel or shoreline reach dimensions including its depth, width, length and gradient;

2. The horizontal alignment and sinuosity;

3. The channel bed, sea bed or lake bottom with identical or similar substrate and similar erosion and sediment transport dynamics;

4. Bank and buffer configuration and erosion and sedimentation rates; and

5. Similar vegetation species diversity, size and densities in the channel, sea bed or lake bottom and on the riparian bank or buffer;

C. Mitigation to compensate for adverse impacts shall meet the following standards:

1. Not upstream of a barrier to fish passage;

2. Is equal or greater in biological function; and

3. To the maximum extent practical is located on the site of the alteration or within one-half mile of the site and in the same aquatic area reach at a 1:1 ratio of area of mitigation to area of alteration; or

4. Is located in the same aquatic area drainage subbasin or marine shoreline and attains the following ratios of area of functional mitigation to area of alteration:

a. a 3:1 ratio for a type S or F aquatic area; and

b. a 2:1 ratio for a type N or O aquatic area;

D. For purposes of subsection C. of this section, a mitigation measure is in the same aquatic area reach if the length of aquatic area shoreline meets the following criteria:

1. Similar geomorphic conditions including slope, soil, aspect and substrate;

2. Similar processes including erosion and transport of sediment and woody debris;

3. Equivalent or better biological conditions including invertebrates, fish, wildlife and vegetation; and

4. Equivalent or better biological functions including mating, reproduction, rearing, migration and refuge; or

5. For tributary streams, a distance of no more than one-half mile;

E. The department may reduce the mitigation ratios in subsection C. of this section to 2:1 ratio for a type S or F aquatic area and 1.5:1 ratio for a type N or O aquatic area if the applicant provides a scientifically rigorous mitigation monitoring program that includes the following elements:

1. Monitoring methods that ensure that the mitigation meets the approved performance standards identified by the department;

2. Financing or funding guarantees for the duration of the monitoring program; and

3. Experienced, qualified staff to perform the monitoring;

F. For rectifying an illegal alteration to any type of aquatic area or its buffer, mitigation measures must meet the following standards:

1. Located on the site of the illegal alteration at a 1:1 ratio of area of mitigation to area of alteration; and

2. To the maximum extent practical, replicates the natural prealteration configuration at its natural prealteration location including the factors in subsection B. of this section; and

G. The department may modify the requirements in this section if the applicant demonstrates that, with respect to each aquatic area function, greater functions can be obtained in the affected hydrologic unit that the department may determine to be the drainage subbasin through alternative mitigation measures.

H. For temporary alterations to an aquatic area or its buffer that is predominately woody vegetation, the department may require mitigation in addition to restoration of the altered aquatic area or buffer. (Ord. 16267 § 58, 2008: Ord. 15051 § 197, 2004: Ord. 10870 § 485, 1993).

21A.24.381 Aquatic habitat restoration project approval. To ensure that agriculture will remain the predominate use in the agriculture production district, the department shall only approve an aquatic habitat restoration project, a floodplain restoration project or a project under the mitigation reserves program that is proposed for a site located within an agricultural production district, as follows:

A. The project shall be allowed only when supported by owners of the land where the proposed project is to be sited;

B. Except as provided in subsection C. of this section, the project shall be located on lands that the department of natural resources and parks determines are unsuitable for direct agricultural production purposes, such as portions of property that have not historically been farmed due to soil conditions or frequent flooding and that it determines cannot be returned to productivity by drainage maintenance; and

C. If the project is located on land determined by the department of natural resources and parks to be suitable for direct agriculture, then:

1. The applicant shall demonstrate to the satisfaction of the department that there are no unsuitable lands available within the agricultural production district that meet the technical or locational requirements of the project;

2. The applicant shall demonstrate to the satisfaction of the department of natural resources and parks that the project will not reduce the ability to farm in the area and that agriculture will remain the predominate use in the agricultural production district; and

3. The project must either:

a. be included in, or be consistent with, an approved Water Resources Inventory Area Plan, Farm Management Plan, Flood Hazard Management Plan or other similar watershed scale plan; or

b. not reduce the baseline agricultural productivity within the agricultural production district. (Ord. 17485 § 22, 2012: Ord. 16267 § 59, 2008).

21A.24.382 Wildlife habitat conservation areas — development standards.

The following development standards apply to development proposals and alterations on sites containing wildlife habitat conservation areas:

A. Unless allowed as an alteration exception under K.C.C. 21A.24.070, only the alterations identified in K.C.C. 21A.24.045 are allowed within a wildlife habitat conservation area;

B. For a bald eagle:

1. The wildlife habitat conservation area is an area with a four-hundred-foot radius from an active nest;

2. Between March 15 and April 30, alterations are not allowed within eight hundred feet of the nest; and

2. Between January 1 and August 31, land clearing machinery, such as bulldozers, graders or other heavy equipment, may not be operated within eight hundred feet of the nest;

C. For a great blue heron:

1. The wildlife habitat conservation area is an area with an eight-hundred-twenty-foot radius from the rookery. The department may increase the radius up to an additional one-hundred sixty-four feet if the department determines that the population of the rookery is declining; and

2. Between January 1 and July 31, clearing or grading are not allowed within nine-hundred-twenty-four feet of the rookery;

D. For a marbled murrelet, the wildlife habitat conservation area is an area with a one-half-mile radius around an active nest;

E. For a northern goshawk, the wildlife habitat conservation area is an area with a one-thousand-five-hundred-foot radius around an active nest located outside of the urban growth area;

F. For an osprey:

1. The wildlife habitat conservation area is an area with a two-hundred-thirty-foot radius around an active nest; and

2. Between April 1 and September 30, alterations are not allowed within six-hundred-sixty feet of the nest;

G. For a peregrine falcon:

1. The wildlife habitat conservation area is an area extending for a distance of one-thousand feet of an eyrie on a cliff face, the area immediately above the eyrie on the rim of the cliff, and the area immediately below the cliff;

2. Between March 1 and June 30, land-clearing activities that result in loud noises, such as from blasting, chainsaws or heavy machinery, are not allowed within one-half mile of the eyrie; and

3. New power lines may not be constructed within one-thousand feet of the eyrie;

H. For a spotted owl, the wildlife habitat conservation area is an area with a three-thousand-seven-hundred-foot radius from an active nest;

I. For a Townsend's big-eared bat:

1. Between June 1 and October 1, the wildlife habitat conservation area is an area with a four-hundred-fifty-foot radius from the entrance to a cave or mine, located outside of the urban area, with an active nursery colony

2. Between November 1 and March 31, the wildlife habitat conservation area is an area with a four-hundred-fifty-foot radius around the entrance to a cave or mine located outside the urban growth area serving as a winter hibernacula;

3. Between March 1 and November 30, a building, bridge, tunnel, or other structure used solely for day or night roosting may not be altered or destroyed;

4. Between May 1 and September 15, the entrance into a cave or mine that is protected because of bat presence is protected from human entry; and

5. A gate across the entrance to a cave or mine that is protected because of bat presence must be designed to allow bats to enter and exit the cave or mine;

J. For a Vaux's swift:

1. The wildlife habitat conservation area is an area with a three-hundred-foot radius around an active nest located outside of the urban growth areas;

2. Between April 1 and October 31, clearing, grading, or outdoor construction is not allowed within four hundred feet of an active or potential nest tree. The applicant may use a species survey to demonstrate that the potential nest tree does not contain an active nest;

K. The department shall require protection of an active breeding site of any federal or state listed endangered, threatened, sensitive and candidate species or King

County species of local importance not listed in subsections B. through J. of this section. If the Washington state Department of Fish and Wildlife has adopted management recommendations for a species covered by this subsection, the department shall follow those management recommendations. If management recommendations have not been adopted, the department shall base protection decisions on best available science. (Ord. 17485 § 23, 2012: Ord. 15051 § 198, 2004).

21A.24.383 Wildlife habitat conservation areas — modification. Upon request of the applicant and based upon a site-specific critical areas report that includes, but is not limited to, an evaluation of the tolerance of the animals occupying the nest or rookery to the existing level of development in the vicinity of the nest or rookery, the department may approve a reduction of the wildlife habitat conservation area for the following species:

A. Bald eagle;

B. Great blue heron; and

C. Osprey. (Ord. 17485 § 24, 2012: Ord. 15051 § 199, 2004).

21A.24.385 Wildlife habitat networks — applicability. The department shall make certain that segments of the wildlife habitat network are set aside and protected along the designated wildlife habitat network adopted by the King County Comprehensive Plan as follows:

A. This section applies to the following development proposals on parcels that include a segment of the designated wildlife habitat network:

1. All urban planned developments, fully contained communities, binding site plans, subdivisions and short subdivisions; and

2. All development proposals on individual lots unless a segment of the wildlife habitat network in full compliance with K.C.C. 21A.24.386 already exists in a tract, easement or setback area, and a notice of the existence of the segment has been recorded;

B. Segments of the wildlife habitat network must be identified and protected in one of the following ways:

1. In urban planned developments, fully contained communities, binding site plans, subdivisions and short subdivisions, native vegetation is placed in a contiguous permanent open-space tract with all developable lots sited on the remaining portion of the project site, or the lots are designed so that required setback areas can form a contiguous setback covering the network segments; or

2. For individual lots, the network is placed in a county-approved setback area. To the maximum extent practical, existing native vegetation is included in the network. The notice required by K.C.C. 21A.27.170 is required; and

C. All wildlife habitat network tracts or setback areas must meet the design standards in K.C.C. 21A.24.386. (Ord. 15051 § 201, 2004: Ord. 13694 § 90, 1999: Ord. 11621 § 52, 1994. Formerly K.C.C. 21A.14.260).

21A.24.386 Wildlife habitat networks — development standards and alterations. The following standards apply to development proposals and alterations on sites containing wildlife habitat network:

A. Unless allowed as an alteration exception under K.C.C. 21A.24.070, only the alterations identified in K.C.C. 21A.24.045 are allowed in the wildlife habitat network;

B. The wildlife habitat network is sited to meet the following conditions:

1. The network forms one contiguous tract or setback area that enters and exits the property where the network crosses the property boundary;

2. To the maximum extent practical, the network maintains a width of three-hundred feet. The network width shall not be less than one-hundred-fifty feet at any point; and

3. The network is contiguous with and includes critical areas and their buffers;

4. To the maximum extent practical, the network connects isolated critical areas or habitat; and

5. To the maximum extent practical, the network connects with wildlife habitat network segments, open space tracts or wooded areas on adjacent properties, if present;

C. The wildlife habitat network tract must be permanently marked in accordance with this chapter;

D. An applicant proposing recreation, forestry or any other use compatible with preserving and enhancing the habitat value of the wildlife habitat network located within the site must have an approved management plan. The applicant shall include and record the approved management plan for a binding site plan or subdivision with the covenants, conditions and restrictions (CCRs), if any. Clearing within the wildlife habitat network in a tract or tracts is limited to that allowed by an approved management plan;

E. If the wildlife habitat network is contained in a setback area, a management plan is not required. Clearing is not allowed within a wildlife habitat network within a setback area on individual lots, unless the property owner has an approved management plan;

F. In urban planned developments, fully contained communities, binding site plans, subdivisions and short subdivisions a homeowners association or other entity capable of long term maintenance and operation shall monitor and assure compliance with any approved management plan;

G. Segments of the wildlife habitat network set aside in tracts, conservation easements or setback area must comply with K.C.C. 16.82.150;

H. The department may credit a permanent open space tract containing the wildlife habitat network toward the other applicable requirements such as surface water management and the recreation space requirement of K.C.C. 21A.14.180, if the proposed uses within the tract are compatible with preserving and enhancing the wildlife habitat value. Restrictions on other uses within the wildlife habitat network tract shall be clearly identified in the management plan;

I. The director may waive or reduce these standards for public facilities such as schools, fire stations, parks and road projects. (Ord. 15051 § 203, 2004: Ord. 11621 § 53, 1994. Formerly K.C.C. 21A.14.386).

21A.24.388 Wildlife habitat conservation areas and wildlife networks — specific mitigation requirements.

In addition to the requirements in K.C.C. 21A.24.130, 21A.24.125 and 21A.24.133, the following applies to mitigation to compensate for the adverse impacts associated with wildlife habitat conservation areas and wildlife habitat networks:

A. Mitigation to compensate for the adverse impacts to a wildlife habitat conservation area must prevent disturbance of each protected species. On-site mitigation may include management practices, such as timing of the disturbance. Off-site mitigation is limited to sites that will enhance the wildlife habitat conservation area;

B. Mitigation to compensate for the adverse impacts to the wildlife habitat network must achieve equivalent or greater biologic functions including, but not limited to, habitat complexity and connectivity functions. Specific mitigation requirements for impacts to the wildlife habitat network shall:

1. Expand or enhance the wildlife network as close to the location of impact as feasible; and

2. Attain the following ratios of area of mitigation to area of alteration:

a. for mitigation on site:

(1) 1:1 ratio for rectifying an illegal alteration to a wildlife habitat network; and

(2) 1.5:1 ratio for enhancement or restoration; and

b. for mitigation off-site:

(1) 2:1 ratio for rectifying an illegal alteration to a wildlife habitat network; and

(2) 3:1 ratio for enhancement or restoration;

C. For temporary alterations, the department may require rectification, restoration or enhancement of the altered wildlife habitat network;

D. The department may increase the width of the wildlife habitat network to mitigate for risks to habitat functions;

E. To the maximum extent practical, mitigation projects involving wildlife habitat network restoration should provide replication of the site's prealteration natural environment including:

1. Soil type, conditions and physical features;
2. Vegetation diversity and density; and
3. Biologic and habitat functions; and

F. The department may modify the requirements in this section if the applicant demonstrates that greater wildlife habitat functions will be obtained in the same wildlife habitat conservation area or wildlife habitat network through alternative mitigation measures. (Ord. 15051 § 204, 2004).

21A.24.500 Critical area designation.

A.1. A property owner or the property owner's agent may request a critical area designation for part or all of a site, without seeking a permit for a development proposal, by filing with the department a written application for a critical area designation on a form provided by the department. If the request is for review of a portion of a site, the application shall include a map identifying the portion of the site for which the designation is sought.

2. The designation may include an evaluation or interpretation of the applicability of critical area buffers and other critical area standards to a future development proposal.

B. In preparing the critical area designation, the department shall perform a critical area review to:

1. Determine whether any critical area exists on the site and confirm its type, location, boundaries and classification;

2. Determine whether a critical area report is required to identify and characterize the location, boundaries and classification of the critical area;

3. Evaluate the critical area report, if required; and

4. Document the existence, location and classification of any critical area.

C. If required by the department, the applicant for a critical area designation shall prepare and submit to the department the critical area report required by subsection B.2. of this section. For sites zoned for single detached dwelling units involving wetlands or aquatic areas, the applicant may elect to have the department conduct the special study in accordance with K.C.C. Title 27;

D. The department shall make the determination of a critical area designation in writing within one hundred twenty days after the application for a critical area designation is complete, as provided in K.C.C. 20.20.050. The periods in K.C.C. 20.20.100.A.1. through 5. are excluded from the one-hundred-twenty-day period. If the determination applies to less than an entire site, the determination shall clearly identify the portion of the site to which the determination applies.

E.1. The written determination made under this section is effective for five years as to the existence, location, classification of a critical area and critical area buffers on the site, unless:

a. there is a change in site conditions;

b. a state or federal agency adopts critical area maps that conflict with the department's written determination.

2. As part of its review of a complete application for a permit or approval, the department shall establish whether the written determination is still effective.

F. If the department designates critical areas on a site under this section, the applicant for a development proposal on that site shall submit proof that a critical area notice has been filed as required by K.C.C. 21A.24.170. Except as provided in this subsection, the department's determination under this section is final. If the department relies on a critical area designation made under this section during its review of an application for a permit or other approval of a development proposal and the permit or other approval is subject to an administrative appeal, any appeal of the designation shall be consolidated with and is subject to the same appeal process as the underlying development proposal. If the King County hearing examiner makes the county's final decision with regard to the permit or other approval type for the underlying development proposal, the hearing examiner's decision constitutes the county's final decision on the designation. If the King County council, acting as a quasi-judicial body, makes the county's final decision with regard to the permit or other approval type for the underlying development proposal, the King County council's decision constitutes the county's final decision on the designation. (Ord. 17841 § 43, 2014: Ord. 16267 § 60, 2008: Ord. 15051 § 209, 2004: Ord. 14187 § 1, 2001).

21A.24.510 Septic system design and critical area designation. An applicant proposing to install a septic system or locate a well shall apply for a critical area designation under K.C.C. 21A.24.500 before seeking approval of the septic system design or well location from the Seattle-King County department of public health. (Ord. 15051 § 211, 2004: Ord. 14187 § 2, 2001).

21A.24.515 Critical areas monitoring. The department of natural resources and parks, in consultation with the department, shall conduct monitoring to evaluate the effect of this chapter on protecting the functions and values of critical areas. (Ord. 17420 § 105, 2012: Ord. 16267 § 61, 2008: Ord. 15051 § 230, 2004).

21A.24.520 Buffer modifications to achieve zoned density. If a property owner is unable to subdivide a RA zoned parcel twenty acres or smaller at the density allowed under K.C.C. 21A.12.030 after application of the requirements of this chapter, the director may approve modifications to requirements for critical area buffers if:

A. The applicant demonstrates that after the use of all provisions of this title, including but not limited to, clustering and buffer averaging, reduction in critical area buffers required by this chapter is necessary to achieve the density allowed under K.C.C. 21A.12.030;

B. To the maximum extent practical, the subdivision or short subdivision design has the least adverse impact on the critical area and critical area buffer;

C. The modification does not pose an unreasonable threat to the public health, safety or welfare on or off the development proposal site and is consistent with the general purposes of this chapter and the public interest; and

D. The applicant provides mitigation to compensate for the adverse impacts to critical areas and buffers resulting from any modification to critical area buffers approved under this section. (Ord. 17539 § 56, 2013: Ord. 15051 § 231, 2004).

21A.24.530 Vesting period for lots in final short plats. Unless the department finds that a change in conditions creates a serious threat to the public

health or safety in the short subdivision, for a period of five years after recording, a lot within a short subdivision shall be governed by the provisions of this chapter in effect at the time a fully completed application for short subdivision approval was filed in accordance with K.C.C. chapter 20.20. (Ord. 15051 § 232, 2004).

21A.24.540 Reliance upon standards established through critical area review of a previously approved conditional use permit. For a development proposal that requires a conditional use permit, the provisions of this chapter in effect at the time a complete application for the conditional use permit was submitted shall apply to the development proposal if:

A. Critical areas on the development proposal site have been categorized and delineated and the impacts of development on the critical areas have been considered in the review of the conditional use permit;

B. There are no outstanding violations of the conditions of the approved conditional use permit relating to the protection of the critical area;

C. The development proposal is in compliance with all conditions that have been imposed as part of the approved conditional use permit; and

D. The conditional use permit has not expired. (Ord. 15051 § 233, 2004).

21A.24.550 Consolidated site review for single-family residential development.

A. A development proposal shall be deemed to comply with the provisions of this chapter and the department shall not require additional critical areas, fire or drainage review of a development proposal for a single-family residential development that is consistent with the conditions established by the department in its review of the development proposal if the applicant meets all of the following requirements:

1. The applicant provides to the department a critical areas report prepared by a preferred consultant, as provided in K.C.C. Title 27, for the critical areas on the development proposal site;

2. The department has issued a critical areas designation under K.C.C. 21A.24.500. If applicable, the designation shall be issued before septic system design, application and approval;

3. The development proposal qualifies for small project drainage review and does not require targeted drainage review under K.C.C. chapter 9.04;

4. The development proposal does not require an alteration exception or reasonable use exception under this chapter, a variance from road standards under K.C.C. Title 14 or a drainage adjustment under K.C.C. chapter 9.04; and

5. The development proposal locates structures, on-site septic drainfield areas, the well location, and other impervious surfaces, including but not limited to driveways, within the areas identified by the department.

B. If an applicant indicates on a form approved by the department that a development proposal for a single family residence will be proposed for review under this section, the department shall consolidate critical areas, drainage, road standards, and fire review. Based on the information provided by the applicant under this section, the department shall identify a development footprint on the property where the applicant may clear and place structures and other impervious surfaces in order to meet the requirements of this chapter and K.C.C. chapters 9.04 and 16.82. At the time of development permit application, the department shall screen the proposal for compliance with the conditions established by the department under this section, set the conditions of permit approval and, if required, establish the mitigation financial guarantee. (Ord. 15051 § 234, 2004).

21A.24.560 Vesting of an approved on-site sewage disposal system. An on-site sewage disposal system approved prior to January 1, 2005, shall be subject to the provisions of this chapter in effect at the time of the on-site sewage disposal system approval. (Ord. 15051 § 235, 2004).

21A.25 SHORELINES

Sections:

21A.25.010 Shoreline master program elements.
21A.25.020 Definitions
21A.25.030 Liberal construction
21A.25.040 Shoreline master program goals - required for permits or appeals.
21A.25.050 Shoreline jurisdiction delineated.
21A.25.060 Names of shoreline environments designations.
21A.25.070 Boundary determination.
21A.25.080 Sequence of mitigation measures - priority.
21A.25.090 Shoreline use and modification - defined - no net loss of shoreline ecological functions allowed - sequencing compliance.
21A.25.100 Shoreline use.
21A.25.110 Aquaculture.
21A.25.120 Public boat launching facilities.
21A.25.130 Forest practices.
21A.25.140 Public access.
21A.25.150 Recreational development.
21A.25.160 Shoreline modification.
21A.25.170 Shoreline stabilization.
21A.25.180 Dock, pier, moorage pile or buoy, float or launching facility.
21A.25.190 Excavation, dredging, dredge material disposal and filling.
21A.25.200 Channel migration zone - new development to avoid future shoreline stabilization.
21A.25.210 Expansion of a dwelling unit or residential accessory structure.
21A.25.220 Shoreline dimensions and density.
21A.25.230 Subdivisions.
21A.25.240 Historic resources.
21A.25.250 Parking facilities.
21A.25.260 New utility facilities and repair and replacement of existing utility facilities.
21A.25.280 Transportation facilities.
21A.25.290 Development limitations - mitigation - substantial development - record of review - conditions of approval - programmatic statement of exemption - exception to statement of exemption.
21A.25.300 Permits - prerequisite to other permits.
21A.25.310 Application review for expansion or replacement of a nonconforming use or development.
21A.25.320 Appeals.

21A.25.010 Shoreline master program elements. The King County shoreline master program elements are established in K.C.C. 20.12.200. (Ord. 16985 § 17, 2010).

21A.25.020 Definitions. The definitions in K.C.C. chapter 21A.06, chapter 90.58 RCW and chapter 173-26 apply within the shoreline jurisdiction. The definitions in chapter 90.58 RCW and chapter 173-26 WAC apply if there is a conflict with the definitions in K.C.C. chapter 21A.06. In addition, the following definitions apply to this chapter unless the context clearly requires otherwise:

A. "Development" means any development as defined in chapter 90.58 RCW.

B. "Shoreline mixed use" means shoreline development that contains a water-dependent use combined with a water related, water enjoyment or a non-water-oriented use in a single building or on a single site in an integrated development proposal. Water dependent uses must comprise a significant portion of the floor area or site area in a shoreline mixed use development. (Ord. 16985 § 19, 2010: Ord. 11792 § 23, 1995: Ord. 3688 Ch. 2 (part), 1978. Formerly K.C.C. 25.08.010).

21A.25.030 Liberal construction. This chapter is exempted from the rule of strict construction and shall be liberally construed to give full effect to the objectives and purposes for which it was enacted. (Ord. 16985 § 21, 2010: Ord. 3688 § 104, 1978. Formerly K.C.C. 25.04.040).

21A.25.040 Shoreline master program goals - required for permits or appeals. The goals, policies, and regulations of the King County shoreline master program must be met before issuing any permits or approvals on land within the shoreline jurisdiction. (Ord. 16985 § 23, 2010: Ord. 11792 § 22, 1995: Ord. 11016 § 17, 1993: Ord. 9614 § 110, 1990: Ord. 5317 § 17, 1981: Ord. 3688 § 105, 1978. Formerly K.C.C. 25.04.050).

21A.25.050 Shoreline jurisdiction delineated.

A. The King County shoreline jurisdiction consists of:

1. All water areas of the state, as defined in RCW 90.58.030, including reservoirs and associated wetlands, together with the lands underlying them, except for:

a. lakes smaller than twenty acres and their associated wetlands; and

b. segments of rivers and streams and their associated wetlands where the mean annual flow is less than twenty cubic feet per second; and

2.a. The shorelands that extend landward in all directions as measured on a horizontal plane for two hundred feet from the ordinary high water mark of the waterbodies identified in subsection A.1. of this section;

b. the one hundred year floodplain and contiguous floodplain areas landward two hundred feet from the one-hundred year floodplain; and

c. all wetlands and river deltas associated with the streams, lakes and tidal waters that are subject to chapter 90.58 RCW.

B. The shoreline jurisdiction does not include tribal reservation lands and lands held in trust by the federal government for tribes. Nothing in the King County Shoreline Master Program or action taken under that program shall affect any treaty right to which the United States is a party.

C. The lakes and segments of rivers and streams constituting the King County shoreline jurisdiction are set forth in Attachment K. to Ordinance 17485.* The King County shoreline jurisdiction is shown on a map adopted in chapter 5 of the King County Comprehensive Plan. If there is a discrepancy between the map and the criteria established in subsection A. of this section, the criteria shall constitute the official King County shoreline jurisdiction. (Ord. 17485 § 25, 2012: Ord. 16985 § 25, 2010: Ord. 3688 § 303, 1978. Formerly K.C.C. 25.12.030).

***Available in the King County Archives.**

21A.25.060 Names of shoreline environments designations.

A. In order to accomplish the goals, policies and regulations of the King County shoreline master program, the following shoreline environment designations have been established:

1. High Intensity shoreline;
2. Residential shoreline;
3. Rural shoreline;
4. Conservancy shoreline;
5. Resource shoreline;
6. Forestry shoreline;
7. Natural shoreline; and
8. Aquatic.

B. The shoreline environment designations are included on a map in chapter 5 of the King County Comprehensive Plan. If there is a discrepancy between the map and the criteria established in chapter 5 of the King County Comprehensive Plan for shoreline environment designations, the criteria shall constitute the official King County shoreline environment designation. Any parcel of land included within the shoreline jurisdiction without a shoreline environment designation shall be considered within the Conservancy environment.

C. The purpose of each shoreline environment designation is defined as follows:

1. The purpose of the High Intensity shoreline is to provide for high intensity water-oriented commercial and industrial uses;

2. The purpose of the Residential shoreline is to accommodate residential and commercial uses on a scale appropriate with urban residential zones;

3. The purpose of the Rural shoreline is to accommodate land uses normally associated with rural area levels of development while providing appropriate public access and recreational uses to the maximum extent practicable;

4. The purpose of the Conservancy shoreline is to conserve areas that are a high priority for restoration, include valuable historic properties or provide recreational opportunities;

5. The purpose of the Resource shoreline is to allow for mining and agricultural uses on lands that are designated under the Growth Management Act as agricultural land of long term commercial significance or mineral resource lands;

6. The purpose of the Forestry shoreline is to allow for forestry uses;

7. The purpose of the Natural shoreline is to protect those shoreline areas that are relatively free of human influence or have high ecological quality. This designation allows only very low intensity uses in order to maintain the existing high levels of ecological process and function; and

8. The Aquatic environment is to protect, restore and manage the unique characteristics and resources of the areas waterward of the ordinary high water mark. (Ord. 16985 § 27, 2010: Ord. 3688 § 302, 1978. Formerly K.C.C. 25.12.020).

21A.25.070 Boundary determination.

A. Where different environment designations have been given to a tributary and the main stream at the point of confluence, the environment designation given to the main stream shall extend for a distance of two hundred feet up the tributary.

B. In case of uncertainty as to a wetland or environment boundary, the director shall determine its exact location in accordance with RCW 90.58.030 and this chapter. (Ord. 16985 § 29, 2010: Ord. 3688 § 305, 1978. Formerly K.C.C. 25.12.050).

21A.25.080 Sequence of mitigation measures - priority.

A. Mitigation measures shall be applied in the following sequence of steps listed in order of priority, with subsection A.1. of this section being top priority:

1. Avoiding the impact altogether by not taking a certain action or parts of an action;

2. Minimizing impacts by limiting the degree or magnitude of the action and its implementation by using appropriate technology or by taking affirmative steps to avoid or reduce impacts;

3. Rectifying the impact by repairing, rehabilitating or restoring the affected environment;

4. Reducing or eliminating the impact over time by preservation and maintenance operations;

5. Compensating for the impact by replacing, enhancing or providing substitute resources or environments; and

6. Monitoring the impact and the compensation projects and taking appropriate corrective measures.

B. In determining appropriate mitigation measures applicable to shoreline development, lower priority measures shall be applied only where higher priority measures are determined to be infeasible or inapplicable.

C. Mitigation shall be designed to:

1. Achieve no net loss of ecological functions for each new development;

2. Not require mitigation in excess of that necessary to assure that the development will result in no net loss of shoreline ecological functions; and

3. Not result in a significant adverse impact on other shoreline ecological functions.

D. When compensatory measures are appropriate under the mitigation priority sequence in subsection A. of this section, preferential consideration shall be given to measures that replace the impacted functions directly and in the immediate vicinity of the impact. The department may approve alternative compensatory mitigation within the watershed if the mitigation addresses limiting factors or identified critical needs for shoreline resource conservation based on watershed or comprehensive resource management plans applicable to the area of impact. The department may require appropriate safeguards, terms or conditions as necessary to ensure no net loss of shoreline ecological functions as conditions of approval for compensatory mitigation measures. (Ord. 16985 § 129, 2010).

21A.25.090 Shoreline use and modification - defined - no net loss of shoreline ecological functions allowed - sequencing compliance.

A. Shoreline use is an activity that is allowed within a specific shoreline environment. Shoreline uses are identified in K.C.C. 21A.25.100.

B. Shoreline modification is construction of a physical element such as a bulkhead, groin, berm, jetty, breakwater, dredging, filling, vegetation removal or alteration or application of chemicals that changes the natural or existing shoreline conditions. Shoreline modifications are identified in K.C.C. 21A.25.160.

C. King County shall ensure that uses and modifications within the shoreline jurisdiction do not cause a net loss of shoreline ecological functions and comply with the sequencing requirements under K.C.C. 21A.25.080. (Ord. 16985 § 30, 2010).

21A.25.100 Shoreline use.

A. The shoreline use table in this section determines whether a specific use is allowed within each of the shoreline environments. The shoreline environment is located on the vertical column and the specific use is located on the horizontal row of the table. The specific uses are grouped by the shoreline use categories in WAC 173-

26-241. The specific uses are defined by those uses in K.C.C. chapter 21A.08. The table should be interpreted as follows:

1. If the cell is blank in the box at the intersection of the column and the row, the use is prohibited in that shoreline environment;

2. If the letter "P" appears in the box at the intersection of the column and the row, the use may be allowed within the shoreline environment;

3. If the letter "C" appears in the box at the intersection of the column and the row, the use may be allowed within the shoreline environment subject to the shoreline conditional use review procedures specified in K.C.C. 21A.44.100.

4. If a number appears in the box at the intersection of the column and the row, the use may be allowed subject to the appropriate review process in this section, the general requirements of this chapter and the specific development conditions indicated with the corresponding number in subsection C. of this section. If more than one number appears after a letter, all numbers apply.

5. If more than one letter-number combination appears in the box at the intersection of the column and the row, the use is allowed in accordance with each letter-number combination.

6. A shoreline use may be allowed in the aquatic environment only if that shoreline use is allowed in the adjacent shoreland environment.

7. This section does not authorize a land use that is not allowed by the underlying zoning, but may add additional restrictions or conditions or prohibit specific land uses within the shoreline jurisdiction. When there is a conflict between the permitted land uses in K.C.C. chapter 21A.08 and shoreline uses in this section, preference for shoreline uses shall first be given to water-dependent uses, then to water related uses and finally to water enjoyment uses. All uses in the shoreline jurisdiction must comply with all relevant county code provisions and with the King County Shoreline Master Program.

B. **Shoreline uses**

KEY P - Permitted Use. **C -** Shoreline Conditional Use. **Blank** - Prohibited. Shoreline uses are allowed only if the underlying zoning allows the use. Shoreline uses are allowed in the aquatic environment only if the adjacent upland environment allows the use	HIGH INTENSITY	RESIDENTIAL	RURAL	CONSERVANCY	RESOURCE	FORESTRY	NATURAL	AQUATIC
Agriculture								
Agriculture (K.C.C. 21A.08.090)		P	P	P	P	P	P1	
Aquaculture								
Aquaculture (fish and wildlife management, K.C.C. 21A.08.090)	P2	P2	P2	P2	P2	P2	P2	P2
Commercial salmon net pens	C2	C2	C2	C2	C2	C2		C2
Boating Facilities								
Marinas (K.C.C. 21A.08.040)	C3	C3	C3					C3
Commercial Development								
General services (K.C.C. 21A.08.050)	P4	P5	P5					
Business services, except SIC Industry No. 1611, automotive parking and off-street required parking lot (K.C.C. 21A.08.060)	P6							
Retail (K.C.C. 21A.08.070)	P7	P8						
Government Services								
Government services except commuter parking lot, utility facility and private stormwater management facility (K.C.C. 21A.08.060)	P9	P9	P9	P9	P9	P9	P9	C10

Forest Practices								
Forestry (K.C.C. 21A.08.090)		P11	P11	P11	P11	P11	C11	
Industry								
Manufacturing (K.C.C. 21A.08.080)	P12							
In-stream structural uses								
Hydroelectric generation facility, wastewater treatment facility and municipal water production (K.C.C. 21A.08.100)	C13	C13	C13			C13		C13
In-stream utility facilities (K.C.C. 21A.08.060)	P14	P14	P14	P14	P14	P14	P14	C14
In-stream transportation portion of SIC 1611 highway and street construction (K.C.C. 21A.08.060)								C15
In-stream fish and wildlife management, except aquaculture (K.C.C. 21A.08.090)								C16
Mining								
Mineral uses (K.C.C. 21A.08.090)					C17	C17		C17
Recreational Development								
Recreational/cultural except for marinas and docks and piers (K.C.C. 21A.08.040)	P18	P19	P19	P20		P19	P21	C
Residential Development								
Single detached dwelling units (K.C.C. 21A.08.030)		P	P	P	P	C22	C22	
Townhouse, apartment, mobile home park, cottage housing (K.C.C. 21A.08.030)	P23	P			P			
Group residences (K.C.C. 21A.08.030)	P23	P						
Accessory uses (K.C.C. 21A.08.030)	P24	P24	P24	P24	P24	C22 and 24	C22 and 24	
Temporary lodging (K.C.C. 21A.08.030)	P23	P27	P27	C27	C27			
Live-aboards	P28	P28	P28					P28
Transportation and parking								
Transportation facilities	P29	P29	P29	C29	P29	P29	C29	C29
Commuter parking lot (K.C.C. 21A.08.060)								
Automotive parking (K.C.C. 21A.08.060)								
Off-street required parking lot (K.C.C. 21A.08.060)								
Utilities								
Utility facility (K.C.C. 21A.08.060)	P26	P26	P26	P26	P26	P26	P26	C26
Regional land uses								
Regional uses except hydroelectric generation facility, wastewater treatment facility and municipal water production (K.C.C. 21A.08.100)	P30							

C. Development conditions:

1. In the Natural environment, limited to low intensity agriculture, such as livestock use with an animal unit density of no more than one per two acres in the shoreline jurisdiction, seasonal hay mowing and related activities and horticulture not to exceed twenty percent of the site area located within the shoreline jurisdiction.

2.a. The supporting infrastructure for aquaculture may be located landward of the aquaculture operation, subject to the limitations of K.C.C. Title 21A.

b. The aquaculture operation must meet the standards in K.C.C. 21A.25.110.

c. In aquatic areas adjacent to the residential shoreline environment, net pen facilities shall be located no closer than one thousand five hundred feet from the ordinary high water mark of this environment, unless the department allows a specific lesser distance that it determines is appropriate based upon a visual impact analysis. Other types of floating culture facilities may be located within one thousand five hundred feet of the ordinary high water mark if supported by a visual impact analysis.

d. In aquatic areas adjacent to the rural shoreline environment, net pen facilities shall be located no closer than one thousand five hundred feet from the ordinary high water mark of this environment, unless the department allows a specific lesser distance that it determines is appropriate based upon a visual impact analysis.

e. In the natural shoreline environment and aquatic areas adjacent to the natural shoreline environment, limited to aquaculture activities that do not require structures, facilities or mechanized harvest practices and that will not alter the natural character of the site or alter natural systems or features.

3.a. New marinas are not allowed along the east shore of Maury Island, from Piner Point to Point Robinson.

b. Marinas must meet the standards in K.C.C. 21A.25.120.

4. Water dependent general services land uses in K.C.C. 21A.08.050 are allowed. Non-water dependent general services land uses in K.C.C. 21A.08.050 are only allowed on sites that are not contiguous with the ordinary high water mark or on sites that do not have an easement that provides direct access to the water.

5.a. Water-dependent general services land uses in K.C.C. 21A.08.050 are allowed.

b. Non-water-dependent general services land uses in K.C.C. 21A.08.050 are only allowed as part of a shoreline mixed-use development that includes water-dependent uses.

c. Non-water-oriented general services land uses must provide a significant public benefit by helping to achieve one or more of the following shoreline master program goals:

(1) economic development for water-dependent uses;

(2) public access;

(3) water-oriented recreation;

(4) conservation of critical areas, scenic vistas, aesthetics or fish and wildlife habitat; and

(5) protection and restoration of historic properties.

6. Water-dependent business services uses in K.C.C. 21A.08.050 are allowed. Water-related business services uses are only allowed as part of a shoreline mixed-use development and only if they support a water-dependent use. The water-related business services uses must comprise less than one-half of the square footage of the structures or the portion of the site within the shoreline jurisdiction.

7.a Water-dependent retail uses in K.C.C. 21A.08.050 are allowed.

b. Non-water-dependent retail uses in K.C.C. 21A.08.050 are only allowed as part of a shoreline mixed-use development if the non-water-dependent retail use supports a water-dependent use. Non-water-dependent uses must comprise less than one-half of the square footage of the structures or the portion of the site within the shoreline jurisdiction.

c. Non-water-oriented retail uses must provide a significant public benefit by helping to achieve one or more of the following shoreline master program goals:

(1) economic development for water-dependent uses;

(2) public access;

(3) water-oriented recreation;

(4) conservation of critical areas, scenic vistas, aesthetics or fish and wildlife habitat; and

(5) protection and restoration of historic properties.

8. Water-dependent retail uses in K.C.C. 21A.08.050 are allowed. Non-water-dependent retail uses in K.C.C. 21A.08.050 are only allowed if the retail use provides a significant public benefit by helping to achieve one or more of the following shoreline master program goals:

a. economic development for water-dependent uses;

b. public access;

c. water-oriented recreation;

d. conservation of critical areas, scenic vistas, aesthetics or fish and wildlife habitat; and

e. protection and restoration of historic properties.

9.a. Water-dependent government services in K.C.C. 21A.08.060 are allowed.

b. Non-water-dependent government services in K.C.C. 21A.08.060 are only allowed as part of a shoreline mixed-use development if the non-water-dependent government use supports a water-dependent use. Non-water-dependent uses must comprise less than one-half of the square footage of the structures or the portion of the site within the shoreline jurisdiction. Only low-intensity water-dependent government services are allowed in the Natural environment.

10. The following standards apply to government services uses within the Aquatic environment:

a. Stormwater and sewage outfalls are allowed if upland treatment and infiltration to groundwater, streams or wetlands is not feasible and there is no impact on critical saltwater habitats, salmon migratory habitat and the nearshore zone. However, stormwater and sewage outfalls are not allowed in the Maury Island Aquatic Reserve, except from Piner Point to Point Robinson;

b. Water intakes shall not be located near fish spawning, migratory or rearing areas. Water intakes must adhere to Washington state Department of Fish and Wildlife fish screening criteria. To the maximum extent practical, intakes should be placed at least thirty feet below the ordinary high water mark;

c. Desalinization facilities shall not be located near fish spawning, migratory or rearing areas. Intakes should generally be placed deeper than thirty feet below the ordinary high water mark and must adhere to Washington state Department Fish and Wildlife fish screening criteria. Discharge of desalination wastewater or concentrated mineral is not allowed in the Maury Island Aquatic Reserve, except that outside the Inner and Outer Harbormaster Harbor, discharge may be considered if there is no impact on critical saltwater habitats, salmon migratory habitat and the nearshore zone;

d. Cable crossings for telecommunications and power lines shall:

(1) be routed around or drilled below aquatic critical habitat or species;

(2) be installed in sites free of vegetation, as determined by physical or video seabed survey;

(3) be buried, preferably using directional drilling, from the uplands to waterward of the deepest documented occurrence of native aquatic vegetation; and

(4) use the best available technology;

e. Oil, gas, water and other pipelines shall meet the same standards as cable crossings and in addition:

(1) pipelines must be directionally drilled to depths of seventy feet or one half mile from the ordinary high water mark; and

(2) use the best available technology for operation and maintenance;

f. Breakwaters are not allowed within the Maury Island Aquatic Reserve or within the Aquatic environment adjacent to the Conservancy and Natural shorelines.

11. In the Natural environment, limited to low intensity forest practices that conserve or enhance the health and diversity of the forest ecosystem or ecological and hydrologic functions conducted for the purpose of accomplishing specific ecological enhancement objectives. In all shoreline environments, forest practices must meet the standards in K.C.C. 21A.25.130.

12. Manufacturing uses in the shoreline environment must give preference first to water-dependent manufacturing uses and second to water-related manufacturing uses:

a. Non-water-oriented manufacturing uses are allowed only:

(1) as part of a shoreline mixed-use development that includes a water-dependent use, but only if the water-dependent use comprises over fifty percent of the floor area or portion of the site within the shoreline jurisdiction;

(2) on sites where navigability is severely limited; or

(3) on sites that are not contiguous with the ordinary high water mark or on sites that do not have an easement that provides direct access to the water; and

(4) all non-water-oriented manufacturing uses must also provide a significant public benefit, such as ecological restoration, environmental clean-up, historic preservation or water-dependent public education;

b. public access is required for all manufacturing uses unless it would result in a public safety risk or is incompatible with the use;

c. shall be located, designed and constructed in a manner that ensures that there are no significant adverse impacts to other shoreline resources and values.

d. restoration is required for all new manufacturing uses;

e. boat repair facilities are not permitted within the Maury Island Aquatic Reserve, except as follows:

(1) engine repair or maintenance conducted within the engine space without vessel haul-out;

(2) topside cleaning, detailing and bright work;

(3) electronics servicing and maintenance;

(4) marine sanitation device servicing and maintenance that does not require haul-out;

(5) vessel rigging; and

(6) minor repairs or modifications to the vessel's superstructure and hull above the waterline that do not exceed twenty-five percent of the vessel's surface area above the waterline.

13. The water-dependent in-stream portion of a hydroelectric generation facility, wastewater treatment facility and municipal water production are allowed, including the upland supporting infrastructure, and shall provide for the protection and preservation, of ecosystem-wide processes, ecological functions, and cultural resources, including, but not limited to, fish and fish passage, wildlife and water resources, shoreline critical areas, hydrogeological processes, and natural scenic vistas.

14. New in-stream portions of utility facilities may be located within the shoreline jurisdiction if:

a. there is no feasible alternate location;

b. provision is made to protect and preserve ecosystem-wide processes, ecological functions, and cultural resources, including, but not limited to, fish and fish passage, wildlife and water resources, shoreline critical areas, hydrogeological processes, and natural scenic vistas; and

c. the use complies with the standards in K.C.C. 21A.25.260.

15. Limited to in-stream infrastructure, such as bridges, and must consider the priorities of the King County Shoreline Protection and Restoration Plan when designing in-stream transportation facilities. In-stream structures shall provide for the protection and preservation, of ecosystem-wide processes, ecological functions, and cultural resources, including, but not limited to, fish and fish passage, wildlife and water resources, shoreline critical areas, hydrogeological processes, and natural scenic vistas.

16. Limited to hatchery and fish preserves.

17. Mineral uses:

a. must meet the standards in K.C.C. chapter 21A.22;

b. must be dependent upon a shoreline location;

c. must avoid and mitigate adverse impacts to the shoreline environment during the course of mining and reclamation to achieve no net loss of shoreline ecological function. In determining whether there will be no net loss of shoreline ecological function, the evaluation may be based on the final reclamation required for the site. Preference shall be given to mining proposals that result in the creation, restoration, or enhancement of habitat for priority species;

d. must provide for reclamation of disturbed shoreline areas to achieve appropriate ecological functions consistent with the setting;

e. may be allowed within the active channel of a river only as follows:

(1) removal of specified quantities of sand and gravel or other materials at specific locations will not adversely affect the natural processes of gravel transportation for the river system as a whole;

(2) the mining and any associated permitted activities will not have significant adverse impacts to habitat for priority species nor cause a net loss of ecological functions of the shoreline; and

(3) if no review has been previously conducted under this subsection C.17.e., prior to renewing, extending or reauthorizing gravel bar and other in-channel mining operations in locations where they have previously been conducted, the department shall require compliance with this subsection C.17.e. If there has been prior review, the department shall review previous determinations comparable to the requirements of this section C.17.e. to ensure compliance with this subsection under current site conditions; and

f. Must comply with K.C.C. 21A.25.190.

18. Only water-dependent recreational uses are allowed, except for public parks and trails, in the High Intensity environment and must meet the standards in K.C.C. 21A.25.140 for public access and K.C.C. 21A.25.150 for recreation.

19. Water-dependent and water-enjoyment recreational uses are allowed in the Residential, Rural and Forestry environments and must meet the standards in K.C.C. 21A.25.140 for public access and K.C.C. 21A.25.150 for recreation.

20. In the Conservancy environment, only the following recreation uses are allowed and must meet the standards in K.C.C. 21A.25.140 for public access and K.C.C. 21A.25.150 for recreation:

a. parks; and

b. trails.

21. In the Natural environment, only passive and low-impact recreational uses are allowed.

22. Single detached dwelling units must be located outside of the aquatic area buffer and set back from the ordinary high water mark to the maximum extent practical.

23. Only allowed as part of a water-dependent shoreline mixed-use development where water-dependent uses comprise more than half of the square footage of the structures on the portion of the site within the shoreline jurisdiction.

24. Residential accessory uses must meet the following standards:

a. docks, piers, moorage, buoys, floats or launching facilities must meet the standards in K.C.C. 21A.25.180;

b. residential accessory structures located within the aquatic area buffer shall be limited to a total footprint of one-hundred fifty square feet; and

c. accessory structures shall be sited to preserve visual access to the shoreline to the maximum extent practical.

25. New highway and street construction is allowed only if there is no feasible alternate location. Only low-intensity transportation infrastructure is allowed in the Natural environment.

26. Utility facilities are subject to the standards in K.C.C. 21A.25.260.

27. Only bed and breakfast guesthouses.
28. Only in a marina.
29. Transportation facilities are subject to the standards in K.C.C. 21A.25.280.
30. Only solid waste transfer stations and subject to K.C.C. 21A.25.260. (Ord. 17485 § 26, 2012: Ord. 16985 § 31, 2010).

21A.25.110 Aquaculture. An applicant for an aquaculture facility must use the sequential measures in K.C.C. 21A.25.080. The following standards apply to aquaculture:

A. Unless the applicant demonstrates that the substrate modification will result in an increase in habitat diversity, aquaculture that involves little or no substrate modification shall be given preference over aquaculture that involves substantial substrate modification and the degree of proposed substrate modification shall be limited to the maximum extent practical.

B. The installation of submerged structures, intertidal structures and floating structures shall be limited to the maximum extent practical.

C. Aquaculture proposals that involve substantial substrate modification or sedimentation through dredging, trenching, digging, mechanical clam harvesting or other similar mechanisms, shall not be permitted in areas where the proposal would adversely impact critical saltwater habitats.

D. Aquaculture activities that after implementation of mitigation measures would have a significant adverse impact on natural, dynamic shoreline processes or that would result in a net loss of shoreline ecological functions shall be prohibited.

E. Aquaculture should not be located in areas that will result in significant conflicts with navigation or other water-dependent uses.

F. Aquaculture facilities shall be designed, located and managed to prevent the spread of diseases to native aquatic life or the spread of new nonnative species.

G. Aquaculture practices shall be designed to minimize use of artificial chemical substances and shall use chemical compounds that are least persistent and have the least impact on plants and animals. Herbicides and pesticides shall be used only in conformance with state and federal standard and to the minimum extent needed for the health of the aquaculture activity.

H. Noncommercial salmon net pen facilities that involve minimal supplemental feeding and limited use of chemicals or antibiotics as provided in subsection G. of this section may be located in King County waters if they are:

1. subsistence salmon net pens operated by tribes with treaty fishing rights;
2. for the limited penned cultivation of wild salmon stocks during a limited portion of their lifecycle to enhance restoration of native stocks; or
3. implemented as mitigation for a development activity.

I. If uncertainty exists regarding potential impacts of a proposed aquaculture activity and for all experimental aquaculture activities, unless otherwise provided for, the department may require baseline and periodic operational monitoring by a county-approved consultant, at the applicant's expense, and shall continue until adequate information is available to determine the success of the project and the magnitude of any probable significant adverse environmental impacts. Permits for such activities shall include specific performance measures and provisions for adjustment or termination of the project at any time if monitoring indicates significant, adverse environmental impacts that cannot be adequately mitigated.

J. Aquaculture developments approved on an experimental basis shall not exceed five acres in area, except land-based projects and anchorage for floating systems, and three years in duration. The department may issue a new permit to

continue an experimental project as many times as it determines is necessary and appropriate.

K. The department may require aquaculture operations to carry liability insurance in an amount commensurate with the risk of injury or damage to any person or property as a result of the project. Insurance requirements shall not be required to duplicate requirements of other agencies.

L. If aquaculture activities are authorized to use public facilities, such as boat launches or docks, King County may require the applicant to pay a portion of the cost of maintenance and any required improvements commensurate with the use of those facilities.

M. New aquatic species that are not previously cultivated in Washington state shall not be introduced into King County saltwaters or freshwaters without prior written approval of the Director of the Washington state Department of Fish and Wildlife and the Director of the Washington Department of Health. This prohibition does not apply to: Pacific, Olympia, Kumomoto, Belon or Virginica oysters; Manila, Butter, or Littleneck clams; or Geoduck clams.

N. Unless otherwise provided in the shoreline permit issued by the department, repeated introduction of an approved organism after harvest in the same location shall require approval by the county only at the time the initial aquaculture use permit is issued. Introduction, for purposes of this section, shall mean the placing of any aquatic organism in any area within the waters of King County regardless of whether it is a native or resident organism within the county and regardless of whether it is being transferred from within or without the waters of King County.

O. For aquaculture projects, over-water structures shall be allowed only if necessary for the immediate and regular operation of the facility. Over-water structures shall be limited to the, storage of necessary tools and apparatus in containers of not more than three feet in height, as measured from the surface of the raft or dock.

P. Except for the sorting or culling of the cultured organism after harvest and the washing or removal of surface materials or organisms before or after harvest, no processing of any aquaculture product shall occur in or over the water unless specifically approved by permit. All other processing and processing facilities shall be located landward of the ordinary high water mark.

Q. Aquaculture wastes shall be disposed of in a manner that will ensure strict compliance with all applicable governmental waste disposal standards, including, but not limited to, the Federal Clean Water Act, Section 401, and chapter 90.48 RCW, Water Pollution Control. No garbage, wastes or debris shall be allowed to accumulate at the site of any aquaculture operation.

R. Unless approved in writing by the National Marine Fisheries Service or the U.S. Fish and Wildlife Service, predator control shall not involve the killing or harassment of birds or mammals. Approved controls include, but are not limited to, double netting for seals, overhead netting for birds and three-foot high fencing or netting for otters. The use of other nonlethal, nonabusive predator control measures shall be contingent upon receipt of written approval from the National Marine Fisheries Service or the U.S. Fish and Wildlife Service, as required.

S. Fish net pens and rafts shall meet the following criteria in addition to the other applicable regulations of this section:

1. Fish net pens shall not be located in inner Quartermaster Harbor, consistent with the recommendations in the Washington state Department of Natural Resources Maury Island Environmental Aquatic Reserve Final Management Plan (October 29, 2004);

2. Fish net pens shall meet, at a minimum, state approved administrative guidelines for the management of net pen cultures. In the event there is a conflict in requirements, the more restrictive requirement shall prevail;

3. Fish net pens shall not occupy more than two surface acres of water area, excluding booming and anchoring requirements. Anchors that minimize disturbance to substrate, such as helical anchors, shall be employed. Such operations shall not use chemicals or antibiotics;

4. Aquaculture proposals that include new or added net pens or rafts shall not be located closer than one nautical mile to any other aquaculture facility that includes net pens or rafts. The department may authorize a lesser distance if the applicant demonstrates to the satisfaction of the department that the proposal will be consistent with the environmental and aesthetic policies and objectives of this chapter and the Shoreline Master Program. The applicant shall demonstrate to the satisfaction of the department that the cumulative impacts of existing and proposed operations would not be contrary to the policies and regulations of the program;

5. Net cleaning activities shall be conducted on a frequent enough basis so as not to violate state water quality standards. When feasible, the cleaning of nets and other apparatus shall be accomplished by air drying, spray washing or hand washing; and

6. In the event of a significant fish kill at the site of a net pen facility, the fin fish aquaculture operator shall submit a timely report to Public Health - Seattle-King County, Environmental Health Division and the department stating the cause of death and shall detail remedial actions to be implemented to prevent reoccurrence.

T. All floating and submerged aquaculture structures and facilities in navigable waters shall be marked in accordance with United States Coast Guard requirements.

U. The rights of treaty tribes to aquatic resources within their usual and accustomed areas shall be addressed through direct coordination between the applicant and the affected tribes through the permit review process.

V. Aquaculture structures and equipment shall be of sound construction and shall be so maintained. Abandoned or unsafe structures and equipment shall be removed or repaired promptly by the owner. Where any structure might constitute a potential hazard to the public in the future, the department shall require the posting of a bond commensurate with the cost of removal or repair. The department may abate an abandoned or unsafe structure in accordance with K.C.C. Title 23.

W. Aquaculture shall not be approved where it will adversely impact eelgrass and macroalgae.

X. Commercial salmon net pens shall meet the following criteria and requirements:

1. Each commercial salmon net pen application shall provide a current, peer-reviewed science review of environmental issues related to salmon net pen aquaculture;

2. The department shall only approve a commercial salmon net pen application if the department determines the scientific review demonstrates that the project construction and activities will achieve no net loss of ecological function in a manner that has no significant adverse short-term impact and no documented adverse long-term impact to applicable elements of the environment, including, but not limited to, habitat for native salmonids, water quality, eel grass beds, other aquaculture, other native species, the benthic community below the net pen or other environmental attributes;

3. The department's review shall:

a. include an assessment of the risk to endangered species, non-endangered species, and other biota that could be affected by the net pen; and

b. evaluate and model water quality impacts utilizing current information, technology, and assessment models. The project proponent shall be financially responsible for this water quality assessment;

4. Commercial salmon net pens shall be designed, constructed and maintained to prevent escapement of fish in all foreseeable circumstances, including, but not limited to, tide, wind and wave events of record, floating and submerged debris, and tidal action;

5. Commercial salmon net pens shall not be located:

a. within three hundred feet of an area containing eelgrass or a kelp bed;

b. within one thousand five hundred feet of an ordinary high water mark; or

c. in a designated Washington state Department of Natural Resources aquatic reserve.

6. A commercial salmon net pen may not be used to mitigate the impact of a development proposal; and

7. The conditional use permit for commercial salmon net pen must be renewed every five years. An updated scientific review shall be conducted as part of the renewal and shall include a new risk assessment and evaluation of the impact of the operation of the salmon net pen during the previous five years. (Ord. 17485 § 27, 2012: Ord. 16985 § 32, 2010).

21A.25.120 Public boat launching facilities.

A. The traffic generated the facility must be safely and conveniently handled by the streets serving the proposed facility;

B. The facility must provide adequate parking in accordance with K.C.C. chapter 21A.18;

C. Live-aboards on a vessel are only allowed in a marina and only as follows:

1. They are for residential use only;

2. The marina shall provide shower and toilet facilities on land;

3. There shall be no sewage discharges to the water;

4. Live-aboards shall not exceed ten percent of the total slips in the marina; and

5. The vessels shall be owner-occupied;

D. The marina must be sited to protect the rights of navigation;

E. The marina must be equipped with pumpout facilities;

F. The marina must have provisions available for cleanup of accidental spills of contaminants;

G. Marinas and boat ramps must be located where their development will not interrupt littoral currents, at the ends of drift cells and away from erosional pocket beaches;

H. Lighting shall be maintained to avoid creating shading for aquatic predator species and other impacts to upland wildlife;

I. Vessels moored on waters of the state shall obtain any required lease or permission from the state; and

J. New covered or enclosed moorages are not allowed in the Maury Island aquatic reserve. (Ord. 16985 § 33, 2010).

21A.25.130 Forest practices.

A. Forest practices within shorelines of statewide significance shall meet the following conditions:

1. Only selective commercial timber harvest is allowed, except other timber harvesting methods may be permitted where the topography, soil conditions or silviculture practices necessary for forest regeneration render selective commercial timber harvests ecologically detrimental;

2. No more than thirty percent of the merchantable trees may be harvested in any ten year period of time; and

3. Clear cutting of timber that is necessary for the preparation of land for other uses authorized by the King County shoreline master program may be permitted so long as limited to the maximum extent practical.

B. Forest practices in the Natural environment must be of low intensity and only for the purpose of enhancing forest health.

C. Forest practices within shoreline environments must comply with the Forest Practices Rules in Title 222 WAC and the revised Forest Practices Board Manual except:

1. The small forest landowner forestry riparian easement program established in chapter 222-21 WAC does not apply within shorelines; and

2. Roads crossing wetlands and aquatic areas within shorelines shall not exceed fourteen feet in width for single lane roads and twenty-six feet in width for two-lane roads, plus any additional width needed for curves or safety conditions. (Ord. 16985 § 35, 2010: Ord. 13190 § 27, 1998: Ord. 11792 § 27, 1995: Ord. 9614 § 113, 1990: Ord. 3688 § 506, 1978. Formerly K.C.C. 25.20.060).

21A.25.140 Public access.

A. Except as otherwise provided in subsection B. of this section, public access shall be required for:

1. Attached residential developments;

2. New subdivisions of more than four lots;

3. Developments for water enjoyment, water related and non-water-dependent uses;

4. Publicly owned land, including, but not limited to, land owned by public agencies and public utilities;

5. Marinas; and

6. Publicly financed shoreline stabilization projects.

B. Public access shall:

1. Connect to other public and private public access and recreation facilities on adjacent parcels to the maximum extent practical;

2. Be sited to ensure public safety is considered; and

3. Be open to the general public;

C. Public access is not required if the applicant demonstrates to the satisfaction of the department that public access would be incompatible with the proposed use because of safety or security issues, would result in adverse impacts to the shoreline environment that cannot be mitigated or there are constitutional or other legal limitations that preclude requiring public access;

D. Public pedestrian and bicycle pathways and recreation areas constructed as part of a private development proposal should enhance access and enjoyment of the shoreline and provide features in scale with the development, such as:

1. View points;

2. Places to congregate in proportion to the scale of the development;

3. Benches and picnic tables;

4. Pathways; and

5. Connections to other public and private public access and recreation facilities; and

E. Private access from single detached residences to the shoreline shall:

1. Not exceed three feet in width;

2. Avoid removal of significant trees and other woody vegetation to the maximum extent practical; and

3. Avoid a location that is parallel to the shoreline to the maximum extent practical. (Ord. 16985 § 36, 2010).

21A.25.150 Recreational development. Recreational development must meet the following standards:

A. The recreational development must be permitted in the underlying zone;

B. Recreational uses in the Natural environment must be water-oriented;

C. Swimming areas shall be separated from boat launch areas and marinas, to the maximum extent practical;

D. The development of underwater sites for sport diving shall not:

1. Take place at depths of greater than eighty feet;

2. Constitute a navigational hazard; and

3. Be located in areas where the normal waterborne traffic would constitute a hazard to those people who may use such a site;

E. The construction of swimming facilities, docks, piers, moorages, buoys, floats and launching facilities below the ordinary high water mark shall be governed by the regulations relating to docks, piers, moorage, buoys, floats or launching facility construction in K.C.C. 21A.25.180

F. Public boat launching facilities or marinas shall be governed by K.C.C. 21A.25.120;

G. Campgrounds in the Natural environment shall meet the following conditions:

1. Campsites shall be located outside the shoreline jurisdiction if possible, and if not, be located outside of critical areas buffers;

2. Restrooms and parking shall be located outside the shoreline jurisdiction; and

3. Removal of vegetation shall be limited to the maximum extent practical;

H. Public contact with unique and fragile areas shall be permitted where it is possible without destroying the natural character of the area;

I. Water viewing, nature study, recording and viewing shall be accommodated by open space, platforms, benches or shelter, consistent with public safety and security;

J. Public recreation shall be provided on county-owned lands consistent with this chapter unless the director determines public recreation is not compatible with other uses on the site or will create a public safety risk; and

K. To the maximum extent practical, proposals for non water oriented active recreation facilities shall be located outside of the shoreline jurisdiction and shall not be permitted where the non water oriented active recreation facility would have an adverse impact on critical saltwater habitat. (Ord. 16985 § 38, 2010: Ord. 3688 § 415, 1978. Formerly K.C.C. 25.16.200).

21A.25.160 Shoreline modification.

A. The shoreline modification table in this section determines whether a specific shoreline modification is allowed within each of the shoreline environments. The shoreline environment is located on the vertical column and the specific use is located on the horizontal row of the table. The specific modifications are grouped by the shoreline modification categories in WAC 173-26-231. The table should be interpreted as follows:

1. If the cell is blank in the box at the intersection of the column and the row, the modification is prohibited in that shoreline environment;

2. If the letter "P" appears in the box at the intersection of the column and the row, the modification may be allowed within the shoreline environment;

3. If the letter "C" appears in the box at the intersection of the column and the row, the modification may be allowed within the shoreline environment subject to the shoreline conditional use review procedures specified in K.C.C. 21A.44.100;

4. If a number appears in the box at the intersection of the column and the row, the modification may be allowed subject to the appropriate review process indicated in this section and the specific development conditions indicated with the corresponding number immediately following the table, and only if the underlying zoning allows the modification. If more than one number appears at the intersection of the column and row, both numbers apply; and

5. If more than one letter-number combination appears in the box at the intersection of the column and the row, the modification is allowed within that shoreline environment subject to different sets of limitations or conditions depending on the review process indicated by the letter, the specific development conditions indicated in the development condition with the corresponding number immediately following the table.

6. A shoreline modification may be allowed in the aquatic environment only if that shoreline modification is allowed in the adjacent shoreland environment.

7. This section does not authorize a shoreline modification that is not allowed by the underlying zoning, but may add additional restrictions or conditions or prohibit specific modifications within the shoreline jurisdiction. All shoreline modifications in the shoreline jurisdiction must comply with all relevant county code provisions and with the King County Shoreline Master Program.

B. Shoreline modifications.

KEY P - Permitted Modification. **C -** Shoreline Conditional Use Required. **Blank** - Prohibited. Shoreline modifications are allowed only if the underlying zoning allows the modification. Shoreline modifications are allowed in the aquatic environment only if the adjacent upland environment allows the modification	HIGH INTENSITY	RESIDENTIAL	RURAL	CONSERVANCY	RESOURCE	FORESTRY	NATURAL	AQUATIC
Shoreline stabilization								
Shoreline stabilization, not including flood protection facilities	P1	P1	P1	C1	P1	C1		P1 C1
Flood protection facilities	P2	P2	P2	P2	P2			P2
Piers and docks								
Docks, piers, moorage, buoys, floats or launching facilities	P3	P3	P3	C3	C3	C3		P3 C3
Fill								
Filling	P4 C4	P4 C4	P4 C4	P4 C4	P4 C4	C4	C4	P4 C4
Breakwaters, jetties, groins and weirs								
Breakwaters, jetties, groins and weirs	P5 C5	P5 C5	P5 C5	P5 C5	P5 C5	P5 C5	P5 C5	P5 C5
Beach and dunes management								
Not applicable in King County								
Dredging and dredge material disposal								
Excavation, dredging, dredge material disposal	P6 C6	P6 C6	P6 C6	P6 C6	P6 C6	C6	C6	P6 C6
Shoreline habitat and natural systems enhancement projects								
Habitat and natural systems enhancement projects	P7	P7	P7	P7	P7	P7	P7	P7
Vegetation management								
Removal of existing intact native vegetation	P8	P8	P8	P9	P8	P8	P9	P9

C. Development conditions.

1. New shoreline stabilization, including bulkheads, must meet the standards in K.C.C. 21A.25.170;

2. Flood protection facilities must be consistent with the standards in K.C.C. chapter 21A.24, the King County Flood Hazard Management Plan adopted January 16,

2007, and the Integrated Stream Protection Guidelines (Washington state departments of Fish and Wildlife, Ecology and Transportation, 2003). New structural flood hazard protection measures are allowed in the shoreline jurisdiction only when the applicant demonstrates by a scientific and engineering analysis that the structural measures are necessary to protect existing development, that nonstructural measures are not feasible and that the impact on ecological functions and priority species and habitats can be successfully mitigated so as to assure no net loss of shoreline ecological functions. New flood protection facilities designed as shoreline stabilization must meet the standards in K.C.C. 21A.25.170.

3. Docks, piers, moorage, buoys, floats or launching facilities must meet the standards in K.C.C. 21A.25.180;

4.a. Filling must meet the standards in K.C.C. 21A.25.190.

b. A shoreline conditional use permit is required to:

(1) Place fill waterward of the ordinary high water mark for any use except ecological restoration or for the maintenance and repair of flood protection facilities; and

(2) Dispose of dredged material within shorelands or wetlands within a channel migration zone;

c. Fill shall not placed in critical saltwater habitats except when all of the following conditions are met:

(1) The public's need for the proposal is clearly demonstrated and the proposal is consistent with protection of the public trust, as embodied in RCW 90.58.020;

(2) Avoidance of impacts to critical saltwater habitats by an alternative alignment or location is not feasible or would result in unreasonable and disproportionate cost to accomplish the same general purpose;

(3) The project including any required mitigation, will result in no net loss of ecological functions associated with critical saltwater habitat; and

(4) The project is consistent with the state's interest in resource protection and species recovery.

d. In a channel migration zone, any filling shall protect shoreline ecological functions, including channel migration.

5.a. Breakwaters, jetties, groins and weirs:

(1) are only allowed where necessary to support water dependent uses, public access, approved shoreline stabilization or other public uses, as determined by the director;

(2) are not allowed in the Maury Island Aquatic Reserve except as part of a habitat restoration project or as an alternative to construction of a shoreline stabilization structure;

(3) shall not intrude into or over critical saltwater habitats except when all of the following conditions are met:

(a) the public's need for the structure is clearly demonstrated and the proposal is consistent with protection of the public trust, as embodied in RCW 90.58.020;

(b) avoidance of impacts to critical saltwater habitats by an alternative alignment or location is not feasible or would result in unreasonable and disproportionate cost to accomplish the same general purpose;

(c) the project including any required mitigation, will result in no net loss of ecological functions associated with critical saltwater habitat; and

(d) the project is consistent with the state's interest in resource protection and species recovery.

b. Groins are only allowed as part of a restoration project sponsored or cosponsored by a public agency that has natural resource management as a primary function.

c. A conditional shoreline use permit is required, except for structures installed to protect or restore shoreline ecological functions.

6. Excavation, dredging and filling must meet the standards in K.C.C. 21A.25.190. A shoreline conditional use permit is required to dispose of dredged material within shorelands or wetlands within a channel migration zone

7. If the department determines the primary purpose is restoration of the natural character and ecological functions of the shoreline, a shoreline habitat and natural systems enhancement project may include shoreline modification of vegetation, removal of nonnative or invasive plants, shoreline stabilization, including the installation of large woody debris, dredging and filling. Mitigation actions identified through biological assessments required by the National Marine Fisheries Services and applied to flood hazard mitigation projects may include shoreline modifications of vegetation, removal of nonnative or invasive plants, shoreline stabilization, including the installation of large woody debris, dredging and filling.

8. Within the critical area and critical area buffer, vegetation removal is subject to K.C.C. chapter 21A.24.

9. Except for forest practices conducted under K.C.C. 21A.25.130, existing native vegetation located outside of the critical area and critical area buffer shall be retained to the maximum extent practical. Within the critical area and critical area buffer, vegetation removal is subject to K.C.C. chapter 21A.24. (Ord. 17485 § 28, 2012: Ord. 16985 § 39, 2010).

21A.25.170 Shoreline stabilization.

A. Shoreline stabilization shall not be considered an outright use and shall be permitted only when the department determines that shoreline protection is necessary for the protection of existing legally established primary structures, new or existing non-water-dependent development, new or existing water-dependent development or projects restoring ecological functions or remediating hazardous substance discharges. Vegetation, berms, bioengineering techniques and other nonstructural alternatives that preserve the natural character of the shore shall be preferred over riprap, concrete revetments, bulkheads, breakwaters and other structural stabilization. Riprap using rock or other natural materials shall be preferred over concrete revetments, bulkheads, breakwaters and other structural stabilization. Lesser impacting measures should be used before more impacting measures.

B. Structural shoreline stabilization may be permitted subject to the standards in this chapter and as follows:

1. The applicant provides a geotechnical analysis that demonstrates that erosion from waves or currents is imminently threatening or that, unless the structural shoreline stabilization is constructed, damage is expected to occur within three years;

2. The erosion is not caused by upland conditions;

3. The proposed structural shoreline protection will provide greater protection than feasible, nonstructural alternatives such as slope drainage systems, vegetative growth stabilization, gravel berms and beach nourishment;

4. The proposal is the minimum necessary to protect existing legally established primary structures, new or existing non-water-dependent development, new or existing water-dependent development or projects restoring ecological functions or remediating hazardous substance discharges; and

5. Adequate mitigation measures will be provided to maintain existing shoreline processes and critical fish and wildlife habitat and ensure no net loss or function of intertidal or riparian habitat.

C. Shoreline stabilization to replace existing shoreline stabilization shall be placed landward of the existing shoreline stabilization, but may be placed waterward directly abutting the old structure only in cases where removal of the old structure would result in greater impact on ecological functions. In critical saltwater habitats, existing shoreline stabilization shall not be allowed to remain in place if the existing shoreline stabilization is resulting in the loss of ecological functions. Adequate mitigation measures that maintain existing shoreline processes and critical fish and wildlife habitat must be provided that ensures no net loss or function of intertidal or riparian habitat.

D. The maximum height of the proposed shoreline stabilization shall be no more than one foot above the elevation of extreme high water on tidal waters, as determined by the National Ocean Survey published by the National Oceanic and Atmospheric Administration, or four feet in height on lakes.

E. Shoreline stabilization is prohibited along feeder bluffs and critical saltwater habitat, unless a geotechnical report demonstrates an imminent danger to a legally established structure or public improvement. If allowed, shoreline stabilization along feeder bluffs and critical saltwater habitat must be designed to have the least impact on these resources and on sediment conveyance systems.

F. Shoreline stabilization shall minimize the adverse impact on the property of others to the maximum extent practical.

G. Shoreline stabilization shall not be used to create new lands.

H. Shoreline stabilization shall not interfere with surface or subsurface drainage into the water body.

I. Automobile bodies or other junk or waste material that may release undesirable material shall not be used for shoreline stabilization.

J. Shoreline stabilization shall be designed so as not to constitute a hazard to navigation and to not substantially interfere with visual access to the water.

K. Shoreline stabilization shall be designed so as not to create a need for shoreline stabilization elsewhere.

L. Shoreline stabilization shall comply with the Integrated Stream Protection Guidelines (Washington state departments of Fish and Wildlife, Ecology and Transportation, 2003) and shall be designed to allow for appropriate public access to the shoreline.

M. The department shall provide a notice to an applicant for new development or redevelopment located within the shoreline jurisdiction on Vashon and Maury Island that the development may be impacted by sea level rise and recommend that the applicant voluntarily consider setting the development back further than required by this title to allow for future sea level rise. (Ord. 16985 § 41, 2010: Ord. 5734 § 5, 1981: Ord. 3688 § 413, 1978. Formerly K.C.C. 25.16.180).

21A.25.180 Dock, pier, moorage pile or buoy, float or launching facility. Any dock, pier, moorage pile or buoy, float or launching facility authorized by this chapter shall be subject to the following conditions:

A. Docks, piers, moorage piles or buoys, floats or launching facilities are allowed only for water dependent uses or for public access and shall be limited to the minimize size necessary to support the use. New private boat launch ramps are not allowed;

B. Any dock, pier, moorage pile or buoy, float or launching facility proposal on marine waters:

1. Must include an evaluation of the nearshore environment and the potential impact of the facility on that environment; and

2. Avoid impacts to critical saltwater habitats unless an alternative alignment or location is not feasible;

C. In the High Intensity, Residential, Rural and Conservancy environments, the following standards apply:

1. Only one dock, pier, moorage pile or buoy, float or launching facility may be allowed for a single detached residential lot and only if the applicant demonstrates there is no feasible practical alternative;

2. For subdivisions or short subdivisions or for multiunit dwelling unit development proposals:

a. Only one joint use dock, pier, float or launching facility is allowed; and

b. One moorage pile or buoy if a dock, pier, float or launching facility is allowed or two moorage piles or buoys if a dock, pier, float or launching facility is not allowed;

3. Only one dock, pier, moorage pile or buoy, float or launching facility is allowed for each commercial or industrial use; and

4. Multiuser recreational boating facilities serving more than four single detached residences shall comply with K.C.C. 21A.25.120.

D. In the Conservancy environment, a dock, pier, moorage pile or buoy, float or launching facility for a commercial or manufacturing use must be located at least two hundred fifty feet from another dock or pier;

E. In the Resource and Forestry Shoreline environments, only one dock, pier, moorage pile or buoy, float or launching facility is permitted and only as an accessory use to a residential use or to support a resource or forestry use;

F. In the Natural environment, a dock, pier, moorage pile or buoy, float or launching facility is prohibited;

G. In freshwater lakes:

1. A new pier, dock or moorage pile for residential uses shall meet the following requirements:

New Pier, Dock or Moorage Piles			Dimensional and Design Standards
a.	Maximum Area: surface coverage, including all attached float decking, ramps, ells and fingers	(1)	480 square feet for single dwelling unit;
		(2)	700 square feet for joint-use facility used by 2 dwelling units;
		(3)	1000 square feet for joint-use facility used by 3 or more dwelling units;
		(4)	These area limitations shall include platform lifts;
		(5)	150 square feet for float for a single dwelling unit; and
		(6)	Where a pier cannot reasonably be constructed under the area limitation above to obtain a moorage depth of 10 feet measured below ordinary high water, an additional 4 square feet of area may be added for each additional foot of pier length needed to reach 10 feet of water depth at the landward end of the pier, provided that all other area dimensions, such as maximum width and length, have been minimized.

b.	Maximum Length for piers, docks, ells, fingers and attached floats	(1)	(A)	On Lake Washington and Lake Sammamish, 150 ft, but piers or docks extending further waterward than adjacent piers or docks must demonstrate that they will not have an adverse impact on navigation; and
			(B)	On all other freshwater lakes, the shorter of: 80 feet or the point where the water depth is 13 feet below ordinary high water
		(2)	26 feet for ells; and	
		(3)	20 feet for fingers and float decking attached to a pier	
c.	Maximum Width	(1)	4 feet for pier or dock walkway or ramp;	
		(2)	6 feet for ells;	
		(3)	2 feet for fingers;	
		(4)	6 feet for float decking attached to a pier, must contain a minimum of 2 feet of grating down the center of the entire float; and	
		(5)	For piers or docks with no ells or fingers, the most waterward 26-foot section of the walkway may be 6 feet wide.	
d.	Height of piers and diving boards	(1)	Minimum of 1.5 feet above ordinary high water to bottom of pier stringers, except the floating section of a dock and float decking attached to a pier;	
		(2)	Maximum of 3 feet above deck surface for diving boards or similar features;	
		(3)	Maximum of 3 feet above deck for safety railing, which shall be an open framework.	
e.	Minimum Water Depth for ells and float decking attached to a pier	(1)	Must be in water with depths of 10 feet or greater at the landward end of the float	
		(2)	Must be in water with depths of 9 feet or greater at the landward end of the ell or finger	
f.	Decking for piers, docks walkways, platform lifts, ells and fingers	(1)	If float tubs for docks preclude use of fully grated decking material, then a minimum of 2 feet of grating down the center of the entire float shall be provided	
		(2)	Piers, docks, and platform lifts must be fully grated or contain other materials that allow a minimum of fifty percent light transmittance through the material	
g.	Location of ells, fingers and deck platforms	(1)	Within 30 feet of the OHWM, only the pier walkway or ramp is allowed	
		(2)	No closer than 30 feet waterward of the OHWM, measured perpendicular to the OHWM	
h.	Pilings and Moorage Piles	(1)	Pilings or moorage piles shall not be treated with pentachlorophenol, creosote, chromated copper arsenate (CCA) or comparably toxic compounds.	
		(2)	First set of pilings or moorage piles located no closer than 18 feet from OHWM	
		(3)	Moorage piles shall not be any farther waterward than	

			the end of the pier or dock
i.	Mitigation	Plantings or other mitigation as provided in subsection L. of this section.	

2. On Lake Washington and Lake Sammamish, the department may approve the following modifications to a new pier proposal that deviates from the dimensional standards of subsection G.1. of this section if both the U.S. Army Corps of Engineers and Washington state Department of Fish and Wildlife have approved an alternate project design. In addition, the following requirements and all other applicable provisions in this chapter shall be met:

	Administrative Approval for Alternative Design of New Pier or Dock	Requirements	
a.	State and Federal Agency Approval	U.S. Army Corps of Engineers, and the Washington state Department of Fish and Wildlife have approved proposal	
b.	Maximum Area	No larger than authorized through state and federal approval	
c.	Maximum Width	(1)	Except as provided in c.ii. of this subsection, the pier and all components shall meet the standards noted in subsection G.1. of this section.
		(2)	4 feet for portion of pier or dock located within 30 feet of the OHWM; and 6 feet for walkways
d.	Minimum Water Depth	No shallower than authorized through state and federal approval	

3.a. A replacement of an existing pier or dock shall meet the following requirements:

	Replacement of Existing Pier or Dock	Requirements	
(1)	Replacement of entire existing pier or dock, including piles OR more than fifty percent of the pier-support piles and more than fifty percent of the decking or decking substructure (e.g. stringers)	Must meet the dimensional decking and design standards for new piers as described in subsection G.1. of this section, except the department may approve an alternative design described in subsection G.3.b. of this section.	
(2)	Mitigation	(a)	Existing skirting shall be removed and may not be replaced.
		(b)	Existing in-water and overwater structures other than existing pier or dock located within 30 feet of the OHWM, except for existing or authorized shoreline stabilization measures, shall be removed.

b. On Lake Washington and Lake Sammamish, the department may approve the following modifications to a pier replacement proposal that deviates from the dimensional standards of subsection G.1. of this section, if both the U.S. Army Corps of Engineers and Washington state Department of Fish and Wildlife have approved an alternate project design. With submittal of a building permit, the applicant shall provide

documentation that the U.S. Army Corps of Engineers, and the Washington state Department of Fish and Wildlife have approved the alternative proposal design. In addition, the following requirements and all other applicable provisions in this chapter shall be met;

Administrative Approval for Alternative Design of Replacement Pier or Dock		Requirements
(1)	State and Federal Agency Approval	U.S. Army Corps of Engineers and the Washington state Department of Fish and Wildlife have approved proposal
(2)	Maximum Area	No larger than existing pier or that allowed under subsection G.1. of this section, whichever is greater
(3)	Maximum Length	26 feet for fingers and float decking attached to a pier. Otherwise, the pier and all components shall meet the standards noted in subsection G.1. of this section
(4)	Maximum Width	(a) 4 feet for walkway or ramp located within 30 feet of the OHWM; otherwise, 6 feet for walkways
		(b) 8 feet for ells and float decking attached to a pier
		(c) For piers with no ells or fingers, the most waterward 26 feet section of the walkway may be 8 feet wide
		(d) Otherwise, the pier and all components shall meet the standards noted in subsection G.1. of this section
(5)	Minimum Water Depth	No shallower than authorized through state and federal approval

4. Proposals involving the addition to or enlargement of existing piers or docks must comply with the requirements in the following table. These provisions shall not be used in combination with the provisions for new or replacement piers in subsection G.1. or G.3. of this section.

	Addition to Existing Pier or Dock	Requirements	
a.	Addition or enlargement	(1)	Must demonstrate that there are no alternatives with less impact on the shoreline; and
		(2)	Must demonstrate that there is a need for the enlargement of an existing pier or dock and that there are no alternatives with less impact on the shoreline Examples of need include, but are not limited to safety concerns or inadequate depth of water
b.	Dimensional standards	Enlarged portions must comply with the new pier or dock standards for length and width, height, water depth, location, decking and pilings and for materials as described in subsection G.1. of this section.	
c.	Decking for piers, docks walkways, ells and fingers	Must convert an area of decking within 30 feet of the OHWM to grated decking equivalent in size to the additional surface coverage. Grated or other materials must allow a minimum of fifty percent light transmittance through the material	
d.	Mitigation	(1)	Existing skirting shall be removed and may not be

			replaced
		(2)	Existing in-water and overwater structures located within 30 feet of the OHWM, except for existing or authorized shoreline stabilization measures or pier or dock walkways or piers, shall be removed at a 1:1 ratio to the area of the addition

5.a. Repair proposals that replace only decking or decking substructure and less than fifty percent of the existing pier-support piles must comply with the following regulations:

Minor Repair of Existing Pier or Dock		Requirements	
(1)	Replacement pilings or moorage piles	(a)	Must use materials as described under subsection G.1.h(3) of this section
		(b)	Must minimize the size of pilings or moorage piles and maximize the spacing between pilings to the extent allowed by site-specific engineering or design considerations
(2)	Replacement of 50 percent or more of the decking or 50 percent or more of decking substructure	Must replace any solid decking surface of the pier or dock located within 30 feet of the OHWM with a grated surface material that allows a minimum of fifty percent light transmittance through the material	

b. Other repairs to existing legally established moorage facilities where the nature of the repair is not described in this subsection shall be considered minor repairs and are permitted, consistent with all other applicable codes and regulations. If cumulative repairs of an existing pier or dock would make a proposed repair exceed the threshold for a replacement pier established in subsection G.3. of this section, the repair proposal shall be reviewed under subsection G.1. of this section for a new pier or dock, except as described in subsection G.3.b. of this section for administrative approval of alternative design.

H. Boatlifts, personal watercraft lifts, boatlift canopies and moorage piles may be permitted as an accessory to piers and docks, subject to the following regulations:

	Boatlift, Personal Watercraft Lift, Boat Canopy and Moorage Piles	Requirements	
1.	Location	a,	Boat lifts shall be placed as far waterward of the OHWM as feasible and safe, but not more than sixty feet from OHWM
		b.	Boat lifts are not permitted within the Maury Island Environmental Aquatic Reserve
		c.	The bottom of a boatlift canopy shall be elevated above the boatlift to the maximum extent practical, the lowest edge of the canopy must be a least 4 feet above the ordinary high water, and the top of the canopy must not extend more than 7 feet above an associated pier
		d.	Moorage piles shall not be closer than 30 feet from OHWM or any farther waterward than the end of the pier or dock
2.	Maximum Number	a.	1 free-standing or deck-mounted boatlift per dwelling

			unit
		b.	1 personal watercraft lift or 1 fully grated platform lift per dwelling unit
		c.	1 boatlift canopy per dwelling unit, including joint use piers
3.	Canopy Materials	a.	Must be made of translucent fabric materials.
		b.	Must not be constructed of permanent structural material.
4.	Fill for Boatlift	a.	Maximum of 2 cubic yards of fill are permitted to anchor a boatlift, subject to the following requirements:
		b.	May only be used if the substrate prevents the use of anchoring devices that can be embedded into the substrate
		c.	Must be clean
		d.	Must consist of rock or precast concrete blocks
		e.	Must only be used to anchor the boatlift
		f.	Minimum amount of fill is used to anchor the boatlift

I. Moorage buoys shall meet the following conditions:

1. Buoys shall not impede navigation;

2. The use of buoys for moorage of recreational and commercial vessels is preferred over pilings or float structures;

3. Buoys shall be located and managed in a manner that minimizes impacts to eelgrass and other aquatic vegetation;

4. Preference should be given mid-line float or all-rope line systems that have the least impact on marine vegetation;

5. New buoys that would result in a closure of local shellfish beds for future harvest shall be prohibited; and

6. No more than four buoys per acre are allowed.

J.1. A boat lift, dock, pier, moorage pile or buoy, float, launching facility or other overwater structure or device shall meet the following setback requirements:

a. All piers, docks, boatlifts and moorage piles for detached dwelling unit use shall comply with the following location standards:

New Pier, Dock, Boatlift and Moorage Pile or Buoy		Minimum Setback Standards
(1)	Side property lines	15 feet
(2)	Another moorage structure not on the subject property, excluding adjacent moorage structure that does not comply with required side property line setback	25 feet, except that this standard shall not apply to moorage piles
(3)	Outlet of an aquatic area, including piped streams	Maximum distance feasible while meeting other required setback standards established under this section
(4)	Public park	Outside of the urban growth area, 25 feet

b. Joint-use structures may abut property lines when the property owners sharing the moorage facility have mutually agreed to the structure location in a contract recorded with the King County division of records and elections to run with the

properties. A copy of the contract must accompany an application for a building permit or a shoreline permit.

2. An overwater structure may abut property lines for the common use of adjacent property owners

K. On marine shorelines, a new, repaired, or replaced pier, dock or float for residential uses shall meet the following requirements:

Pier, Dock or Float on Marine Waters			Dimensional and Design Standards
1.	Maximum Area: surface coverage, including all attached float decking and ramps	a.	480 square feet for single dwelling unit;
		b.	700 square feet for joint-use facility used by 2 dwelling units;
		c.	1000 square feet for joint-use facility used by 3 or more dwelling units;
		d.	These area limitations shall include platform lifts; and
		e.	240 square feet for float for a single dwelling unit.
2.	Maximum Width	a.	4 feet for pier or dock for single dwelling unit;
		b.	6 feet for pier or dock for joint use facility; and
		c.	4 feet for ramp connecting to a pier or float
3.	Floats	a.	For a single-use structure, the float width must not exceed 8 feet and the float length must not exceed 30 feet. Functional grating must be installed on at least 50% of the surface area of the float;
		b.	For a joint-use structure, the float width must not exceed 8 feet and the float length must not exceed 60 feet. Functional grating must be installed on at least 50% of the surface area of the float;
		c.	To the maximum extent practical, floats must be installed with the length in the north-south direction;
		d.	If the float is removed seasonally, the floats shall be stored above mean high/higher water/ordinary high water line at a department approved location;
		e.	Flotation for the float shall be fully enclosed and contained in a shell, such as polystyrene tubs not shrink wrapped or sprayed coatings, that prevents breakup or loss of the flotation material into the water and is not readily subject to damage by ultraviolet radiation or abrasion caused by rubbing against piling or waterborne debris;
		f.	Flotation components shall be installed under the solid portions of the float, not under the grating; and
		g.	If the float is positioned perpendicular to the ramp, a small float may be installed to accommodate the movement of the ramp due to tidal fluctuations. The dimensions of the small float cannot exceed 6 feet in width and 10 feet in length.
4.	Float stops	a.	To suspend the float above the substrate, the preferred

			and least impacting option is to suspend the float above the substrate by installing float stops (stoppers) on piling anchoring new floats. The stops must be able to fully support the entire float during all tidal elevations;
		b.	If float stops attached to pilings are not feasible (this must be explained in the application), then up to four 10 inch diameter stub pilings can be installed instead;
		c.	Float feet attached to the float may be considered an option only under these circumstances: (1) in coarse substrate with 25% of the grains are at least 25 mm in size for a grain size sample taken from the upper one foot of substrate; and (2) for elevations of 3 feet below mean high high water and lower, if 25% of the grains are at least 4 mm in size for a grain size sample taken from the upper one foot of substrate;
		d.	For repair or replacement of existing float feet if: (1) substrate contains mostly gravel; and (2) proposed replacement or repair includes other improvements of the environmental baseline, such as the removal of creosote-treated piling and increased amounts of grating; and
		e.	Floats can be held in place with lines anchored with a helical screw or "duckbill" anchor, piling with stoppers or float support/stub pilings as follows: (1) For a single-use float, a maximum of 4 piling (not including stub piling) or helical screw or “duckbill” anchors can be installed to hold the float in place. (2) For a joint-use float, a maximum of 8 piling or helical screw or "duckbill" anchors can be installed to hold the float in place. (3) If anchors and anchor lines need to be used, the anchor lines shall not rest on the substrate at any time. (4) In rocky substrates where a helical screw or "duckbill" anchor cannot be used, if the applicant submits a rationale why these types of anchors cannot be used and the department concurs with this rationale, a department approved anchor of another type, such as a concrete block, may be permitted.
5.	Decking for piers, docks walkways, platform lifts, ells and fingers	a.	Grating must not be covered, on the surface or underneath, with any stored items, such as floats, canoes, kayaks, planter boxes, sheds, carpet, boards or furniture;
		b.	Grating shall be kept clean of algae, mud or other debris that may impede light transmission;
		c,	Piers, docks, and platform lifts must be fully grated or contain other materials that allow a minimum of fifty percent light transmittance through the material;
		d.	Grating openings shall be oriented lengthwise in the east-west direction to the extent practicable and the structures themselves should be oriented to maximize natural light penetration;
		e.	Overwater structures shall incorporate as much functional grating as possible. Grating needs to have a minimum of

			60% open area; and
		f.	The area of floating boat lifts to be moored at the overwater structure shall be included in the float grating calculations.
6.	Pier or dock configuration	Only straight line piers or docks are allowed. Ells, fingers or "T" shaped docks and piers are not allowed.	
7.	Pilings and Moorage Piles	a.	Pilings or moorage piles shall not be treated with pentachlorophenol, creosote, chromated copper arsenate (CCA) or comparably toxic compounds;
		b.	Replacement or proposed new piling can be steel, concrete, plastic or untreated or treated wood. Any piling subject to abrasion and subsequent deposition of material into the water shall incorporate design features to minimize contact between all of the different components of overwater structures during all tidal elevations;
		c.	New piling associated with a new pier must be spaced at least 20 feet apart lengthwise along the structure, unless the length of structure itself is less than 20 feet. If the structure itself is less than 20 feet in length, piling can only be placed at the ends of the structure. Piles in forage fish spawning areas shall be spaced at least 40 feet apart;
		d.	If the project includes the replacement of existing piling, they should be either partially cut with a new piling secured directly on top, fully extracted, or cut 2 feet below the mudline. If treated piling are fully extracted or cut, the holes or piles must be capped with clean, appropriate material. Hydraulic water jets cannot be used to remove piling;
		e.	A maximum of two moorage piles may be installed to accommodate the moorage of boats exceeding the length of the floats; and
		f.	Dolphins are not permitted.
8.	Mitigation	Plantings or other mitigation as provided in subsection L. of this section.	

L. New, expanded, replacement or repaired piers, docks, floats, boatlifts, boat canopies and moorage piles or buoys shall comply with the following:

1. Existing habitat features, such as large and small woody debris and substrate material, shall be retained and new or expanded moorage facilities placed to avoid disturbance of such features;

2. Invasive weeds, such as milfoil, may be removed as provided in K.C.C. chapter 21A.24;

3. In order to mitigate the impacts of new or expanded moorage facilities, the applicant shall plant site-appropriate emergent vegetation and a buffer of vegetation a minimum of ten feet wide along the entire length of the lot immediately landward of ordinary high water mark. Planting shall consist of native shrubs and trees and, when possible, emergent vegetation. At least five native trees will be included in a planting plan containing one or more evergreen trees and two or more trees that like wet roots, such as willow species. Such planting shall be monitored for a period of five years consistent with a monitoring plan approved in accordance with K.C.C. chapter 21A.24. This subsection is not intended to prevent reasonable access through the shoreline

critical area buffer to the shoreline, or to prevent beach use of the shoreline critical area;

M. Except as otherwise provided for covered boat lifts under subsection H. of this section, covered docks or piers, covered moorages, covered floats, and other covered structures are not permitted waterward of the ordinary high water mark; and

N. No dwelling unit may be constructed on a dock or pier. A water related or water enjoyment use may be allowed on a dock, pier or other over-water structure only as part of a mixed-use development and only if accessory to and in support of a water-dependent use. (Ord. 16985 § 43, 2010: Ord. 15971 § 107, 2007: Ord. 12763 § 1, 1997: Ord. 3688 § 409(4), 1978. Formerly K.C.C. 25.16.120).

21A.25.190 Excavation, dredging, dredge material disposal and filling. Excavation, dredging, dredge material disposal and filling may be permitted only as follows:

A. Fill or excavation landward of the ordinary high water mark shall be subject to K.C.C. chapters 16.82 and 21A.24;

B. Fill may be permitted below the ordinary high water mark only:

1. When necessary to support a water dependent use;

2. To provide for public access;

3. When necessary to mitigate conditions that endanger public safety, including flood risk reduction projects;

4. To allow for cleanup and disposal of contaminated sediments as part of an interagency environmental cleanup plan;

5. To allow for the disposal of dredged material considered suitable under, and conducted in accordance with, the dredged material management program of the Washington state Department of Natural Resources;

6. For expansion or alteration of transportation or utility facilities currently located on the shoreline and then only upon demonstration that alternatives to fill are not feasible; or

7. As part of mitigation actions, environmental restoration projects and habitat enhancement projects;

C. Fill or excavations shall be permitted only when technical information demonstrates water circulation, littoral drift, aquatic life and water quality will not be substantially impaired and that the fill or excavation will not obstruct the flow of the ordinary high water, flood waters or cutoff or isolate hydrolic features from each other;

D. Dredging and dredged material disposal below the ordinary high water mark shall be permitted only:

1. When necessary for the operation of a water dependent use;

2. When necessary to mitigate conditions that endanger public safety or fisheries resources;

3. As part of and necessary to roadside or agricultural ditch maintenance that is performed consistent with best management practices promulgated through administrative rules under the critical areas provisions of K.C.C. chapter 21A.24 and if:

a. the maintenance does not involve any expansion of the ditch beyond its previously excavated size. This limitation shall not restrict the county's ability to require mitigation, under K.C.C. chapter 21A.24, or other applicable laws;

b. the ditch was not constructed or created in violation of law;

c. the maintenance is accomplished with the least amount of disturbance to the stream or ditch as possible;

d. the maintenance occurs during the summer low flow period and is timed to avoid disturbance to the stream or ditch during periods critical to salmonids; and

e. the maintenance complies with standards designed to protect salmonids and salmonid habitat, consistent with K.C.C. chapter 21A.24, though this subsection D.3.e. shall not be construed to permit the mining or quarrying of any substance below the ordinary high water mark;

4. For establishing, maintaining, expanding, relocating or reconfiguring navigation channels and basins when necessary to ensure safe and efficient accommodation of existing navigation uses when:

a. significant ecological impacts are minimized;

b. mitigation is provided;

c. maintained to the existing authorized location, depth and width;

5. For restoration projects when;

a. the site where the fill is placed is located waterward of the ordinary high water mark; and

b. the project is associated with a habitat project under the Model Toxics Control Act or the Comprehensive Environmental Response, Compensation, and Liability Act; or

c. any habitat enhancement or restoration project; and

6. For flood risk reduction projects conducted in accordance with Policy RCM-3 of the King County Flood Hazard Management Plan;

E. Dredging is not allowed waterward of the ordinary high water mark for the primary purpose of obtaining fill material or creating a new marina;

F. Disposal of dredged material shall be done only in approved deep water disposal sites or approved upland disposal sites and is not allowed within wetlands or channel migration zones;

G. Stockpiling of dredged material in or under water is prohibited; and

H. In order to insure that operations involving dredged material disposal and maintenance dredging are consistent with the King County shoreline master program as required by RCW 90.58.140(1), no dredging may commence in any shoreline environment without the responsible person having first obtained either a substantial development permit or a statement of exemption when required under K.C.C. 21A.25.290. A statement of exemption or shoreline permit is not required before emergency dredging needed to protect property from imminent damage by the elements, if statement of exemption or substantial development permit is subsequently obtained following the procedures in K.C.C. 16.82.065. (Ord. 16985 § 45, 2010: Ord. 16172 § 7, 2008: Ord. 13247 § 3, 1998: Ord. 5734 § 6, 1981: Ord. 3688 § 414, 1978. Formerly K.C.C. 25.16.190).

21A.25.200 Channel migration zone - new development to avoid future shoreline stabilization. In the channel migration zone in the shoreline jurisdiction, to the maximum extent practical, new development shall be located and designed to avoid the need for future shoreline stabilization. (Ord. 16985 § 131, 2010).

21A.25.210 Expansion of a dwelling unit or residential accessory structure.

The expansion of a dwelling unit or residential accessory structure located in the shoreline jurisdiction, if allowed under K.C.C. 21A.24.045, is subject to the following:

A. If the proposed expansion will result in a total cumulative expansion of the dwelling unit and accessory structures of more than one thousand square feet, a shoreline variance is required; and

B. If the site has an approved rural stewardship plan under K.C.C. 21A.24.055, the expansion is not allowed. (Ord. 17485 § 29, 2012: Ord. 16985 § 46, 2010).

21A.25.220 Shoreline dimensions and density.

A. The shoreline dimensions table in subsections B. and C. of this section establishes the shoreline standards within each of the shoreline environments. The shoreline environment is located on the vertical column and the density and dimensions standard is located on the horizontal row of the table. The table should be interpreted as follows:

1. If the cell is blank in the box at the intersection of the column and the row, the standards are the same as for the underlying zoning.

2. If the cell has a number in the box at the intersection of the column and the row, that number is the density or dimension standard for that shoreline environment.

3. If the cell has a parenthetical number in the box at the intersection of the column and the row, that parenthetical number identifies specific conditions immediately following the table that are related to the density and dimension standard for that environment.

B. The dimensions enumerated in this section apply within the shoreline jurisdiction. If there is a conflict between the dimension standards in this section and K.C.C. chapter 21A.12, the more restrictive shall apply.

Shoreline dimensions.

	HIGH INTENSITY	RESIDENTIAL	RURAL	CONSERVANCY	RESOURCE	FORESTRY	NATURAL	AQUATIC
Standards								
Base height	35 feet (1)	35 feet (1)	35 feet (1)	35 feet (1)	35 feet (1)	35 feet (1)	30 feet (1)	35 feet (1)
Maximum density (units per acre)	6 (4)	6 (4)						
Minimum lot area			5 acres (2)	5 acres (2)	10 acres	80 acres	80 acres	
Minimum lot width		50 feet	100 feet	150 feet	150 feet	150 feet	330 feet	
Impervious surface				10% (3)				

C. Development conditions.

1. This height can be exceeded consistent with the base height for the zone only if the structure will not obstruct the view of a substantial number of residences on areas adjoining the shoreline or if overriding considerations of the public interest will be served, and only for:

a. agricultural buildings;

b. water dependent uses and water related uses; and

c. regional light rail transit support structures, but no more than is reasonably necessary to address the engineering, operational, environmental issues at the location of the structure;

2. The minimum lot areas may be reduced as follows:

a. to no less than 10,000 square feet or the minimum lot areas for the zone, whichever is greater, through lot averaging; and

b. when public access is provided, to no less than 8,000 square feet, or the minimum lot area for the zone, whichever is greater, through cluster development, as provided in K.C.C. chapter 21A.14.

3. For lots created before the December 10, 2010, if achieving the ten percent maximum impervious surface limit is not feasible, the amount of impervious surface

shall be limited to the maximum extent practical but not to exceed the amount of impervious surface allowed under K.C.C. 21A.12.030 and 21A.12.040.

4. Except for a mixed use development, the density of the underlying zoning or 6 units per acre, whichever is lower. A mixed use development may have the density of the underlying zone. (Ord. 17485 § 30, 2012: Ord. 16985 § 47, 2010).

21A.25.230 Subdivisions.

A. Any existing lot that does not comply with the density and dimensions standards of K.C.C. chapter 21A.12 or K.C.C. 21A.25.220 and that is located wholly or partially within the shoreline jurisdiction shall be subject to the following provisions:

1. If the adjoining property is not under the same ownership as such lot, then the lot shall be considered a separate building site; and

2. If the adjoining property is under the same ownership as such lot, then the lot shall not be considered a separate building site until the lot is combined with adjoining property under the same ownership in such a way as to comply with the density and dimensions standards of K.C.C. chapter 21A.12.

B. Submerged land within the boundaries of any waterfront parcel shall not be used to compute lot area, lot dimensions, yards, recreation space or other similar required conditions of land subdivision or development, except, where specifically authorized by ordinance, such lands may be used in area computations as an incentive to encourage common open space waterfront areas.

C. All newly created lots wholly or partially within the shoreline shall be of uniform size and dimension, whenever possible.

D. Subdivision of more than four lots shall provide an improved and maintained pedestrian easement to the shoreline that is of sufficient width to ensure usable access for all residents. Public access to the shoreline shall be in conformance with the standards in K.C.C. 21A.25.140.

E. Subdivisions should be designed to locate structures outside the shoreline jurisdiction whenever feasible. When lots are located within the shoreline jurisdiction, the size and shape of the lots should allow for the construction of residential units that do not require shoreline stabilization. (Ord. 16985 § 49, 2010: Ord. 11792 § 26, 1995: Ord.3688 § 410, 1978. Formerly K.C.C. 25.16.150).

21A.25.240 Historic resources. Historic resources include historic buildings, sites, objects, districts and landscapes, prehistoric and historic archaeological resources and traditional cultural places. Development within shoreline environments shall protect historic resources as follows:

A.1. Known historic resources are inventoried by the historic preservation program and are subject to the procedures in K.C.C. 20.62.150. As required by K.C.C. 20.62.150, the department shall inform the historic preservation officer regarding the impacts of development proposals on inventoried resources. Disturbance of known archaeological sites is also subject to state regulations, including chapters 27.44, 27.53 and 68.80 RCW.

2. If a known archaeological site or traditional cultural place is affected by a development proposal, the historic preservation officer shall inform and consult with the Washington state Department of Archaeology and Historic Preservation and any concerned Native American tribes. To the extent feasible, the historic preservation officer shall coordinate county and state required permitting and compliance procedures and requirements to avoid substantial duplication of effort by permit applicants. The department shall require a site inspection or evaluation by a professional archaeologist in coordination with any concerned Native American tribes.

3. In considering shoreline permits or shoreline exemptions with regard to known historic resources, the department may attach conditions to provide sufficient time for the Historic Preservation Officer to consult with the Washington State Department of Archaeology and Historic Preservation and any concerned Native American tribes, and to ensure that historic resources are properly protected, or for appropriate agencies to contact property owners regarding purchase or other long-term stewardship and protection arrangements. Provision for the protection and preservation of historic resources shall be incorporated in permits and exemptions to the maximum extent practical;

B.1. Consistent with the definitions and requirements in chapters 27.44, 27.53 and 68.80 RCW, and with the intent of K.C.C. chapter 20.62, whenever potentially significant historic resources, or archaeological artifacts, are discovered in the process of development on shorelines, work on that portion of the development site shall be stopped immediately and the find reported as soon as possible to the department.

2. For inadvertent discoveries, the department shall notify the historic preservation officer. If an archaeological site or artifacts have been discovered, the department shall also notify the Washington state Department of Archaeology and Historic Preservation, any concerned Native American tribes and other appropriate agencies. The department shall require that a historic resource assessment be conducted immediately by a professional archaeologist, ethnographer or historic preservation professional, as applicable, in consultation with the historic preservation officer, to determine the significance of the discovery and the extent of damage that may have occurred to the resource. The historic resource assessment shall be distributed to the historic preservation officer, and, if an archaeological site, archaeological artifacts or a traditional cultural place have been discovered, the Washington state Department of Archaeology and Historic Preservation, and any concerned Native American tribes for a fifteen-day review period or, in the case of inadvertent discovery of human remains, a thirty-day review period to determine the significance of the discovery. If the historic resource has been determined not to be significant by the agencies or governments listed in this subsection B.2., or if those agencies or governments have failed to respond within the applicable review period following receipt of the historic resource assessment, the stopped work may resume; and

3. Upon receipt of a positive determination of a resource's significance, or if available information suggests that a negative determination is erroneous, the department or the historic preservation officer may require that a historic resource management plan be prepared by a qualified professional archaeologist or other appropriate professional if such action is reasonable and necessary to implement related program objectives and is consistent with the intent of King County policies and codes protecting historic resources;

C.1. If a private or publicly owned historic resource is identified, public access shall be encouraged as appropriate for purposes of public education, but only if:

a. the type or level of public access is consistent with the long term protection of both historic resource values and shoreline ecological functions; and

b. an access management plan is developed in accordance with development site- and resource-specific conditions in consultation with the historic preservation officer and, if an archaeological site, archaeological artifacts or a traditional cultural place have been discovered, the Washington state Department of Archaeology and Historic Preservation, any concerned Native American tribes or other agencies, as appropriate, to address physical protection of the resource, hours of operation, interpretive or directional signage, lighting, pedestrian access or traffic and parking, as appropriate.

2. For archaeological sites and traditional cultural places, the historic preservation program, the Washington state Department of Archaeology and Historic Preservation, any concerned Native tribes or other agencies, as appropriate, shall approve public access measures before provision of public access to a site. (Ord. 16985 § 50, 2010).

21A.25.250 Parking facilities. Parking facilities, except parking facilities associated with single detached dwelling units, shall meet the following standards:

A. Parking areas serving a water-related, water-enjoyment or a non-water-oriented use must be located beneath or upland of the development that the parking area serves, except for utility facilities;

B. The design of parking facilities must use low-impact designs, such as porous concrete and vegetated swales;

C. Lighting shall be the minimum necessary and shall be shielded and directed away from the water and critical areas and critical area buffers; and

D. In the Natural environment, parking areas shall be located at least two hundred feet from the ordinary high water mark. (Ord. 16985 § 51, 2010).

21A.25.260 New utility facilities and repair and replacement of existing utility facilities. New utility facilities and repair and replacement of existing utility facilities may be permitted subject to the general requirements of this chapter, as follows:

A. To the maximum extent practical, new utility and transmission facilities shall:

1. Avoid disturbance of unique and fragile areas;
2. Avoid disturbance of wildlife spawning, nesting and rearing areas;
3. Overhead utility facilities shall not be permitted in public parks, monuments, scenic recreation or historic areas;
4. Avoid changing groundwater patterns and hyporheic flows that support streams and wetlands;
5. Not be located within the Natural shoreline unless the utility is low-intensity; and
6. Avoid locating new utility and transmission facilities in tidelands or in or adjacent to the Maury Island aquatic reserve;

B. New utility distribution and transmission facilities shall be designed to:

1. Be located outside the shoreline jurisdiction where feasible;
2. Be located within existing rights of way and utility corridors where feasible;
3. Minimize visual impact;
4. Harmonize with or enhance the surroundings;
5. Not create a need for shoreline protection; and
6. To the maximum extent practical, use natural screening;

C. To the maximum extent practical the construction, repair, replacement and maintenance of utility facilities shall:

1. Maximize the preservation of natural beauty and the conservation of resources;
2. Minimize scarring of the landscape;
3. Minimize siltation and erosion;
4. Protect trees, shrubs, grasses, natural features and topsoil from drainage; and
5. Avoid disruption of critical aquatic and wildlife stages;

D. Rehabilitation of areas disturbed by the construction, repair, replacement or maintenance of utility facilities shall:

1. Be accomplished as rapidly as possible to minimize soil erosion and to maintain plant and wildlife habitats; and

2. Use plantings compatible with the native vegetation;

E. Solid waste transfer stations shall only be permitted within the High Intensity shoreline environment; and

F. Utility production and processing facilities, such as power plants and sewage treatment plants, are not allowed within the shoreline jurisdiction. (Ord. 16985 § 53, 2010: Ord. 3688 § 411, 1978. Formerly K.C.C. 25.16.160).

21A.25.270 Signs. Signs may be permitted subject to K.C.C. chapter 21A.20, but only as follows:

A. Signs waterward of the ordinary high water mark shall be permitted only to the extent necessary for the operation of a permitted overwater development. No such a sign shall be larger than five square feet;

B. In the Rural environment, signs may not exceed fifty square feet;

C. In the Resource, Natural and Conservancy environments, signs are not allowed except for:

1. Signs of not more than twenty-five square feet within public parks or trails; and
2. Signs permitted under K.C.C. chapter 21A.20 for residential uses;

D. Signs to protect public safety or prevent trespass may be allowed and should be limited in size and number to the maximum extent practical. (Ord. 16985 § 55, 2010: Ord. 3688 § 408, 1978. Formerly K.C.C. 25.16.080).

21A.25.280 Transportation facilities.

A. Transportation facilities, including, but not limited to, streets, alleys, highways, railroads and regional light rail transit may be located in all shoreline environments.

B. Within street or alley rights-of-way, uses shall be limited to street purposes as defined by law.

C. Within railroad and regional light rail transit rights-of-way, allowed uses shall be limited to: tracks, signals or other operating devices; movement of rolling stock; utility lines and equipment; and facilities accessory to and used directly for the delivery and distribution of services to abutting property.

D. New transportation facilities shall, to the maximum extent practical:

1. Be located outside of the shoreline jurisdiction;
2. Avoid disturbance of unique and fragile areas;
3. Avoid disturbance of wildlife spawning, nesting and rearing areas;
4. Avoid changing groundwater patterns and hyporheic flows that support streams and wetlands;
5. Not create a need for shoreline protection; and
6. Use natural screening. (Ord. 16985 § 56, 2010).

21A.25.290 Development limitations - mitigation - substantial development - record of review - conditions of approval - programmatic statement of exemption - exception to statement of exemption.

A. Development within the shoreline jurisdiction, including preferred uses and uses that are exempt from permit requirements, shall be undertaken only if that development is consistent with the policies of RCW 90.58.020, chapter 173-26 WAC the King County shoreline master program and will not result in a net loss of shoreline ecological functions or in a significant adverse impact to shoreline uses, resources and values, such as navigation, recreation and public access. The proponent of a shoreline development shall employ measures to mitigate adverse impacts on shoreline functions and processes following the sequencing requirements of K.C.C. 21A.25.080.

B. A substantial development permit shall be required for all proposed uses and modifications within the shoreline jurisdiction unless the proposal is specifically exempt

from the definition of substantial development in RCW 90.58.030 and WAC 173-27-040 or is exempted by RCW 90.58.140. If a proposal is exempt from the definition of substantial development, a written statement of exemption is required for any proposed uses and modifications if:

1. WAC 173-27-050 applies; or

2. Except for the maintenance of agricultural drainage that is not used by salmonids or as otherwise provided in subsection F. of this section, the proposed use or modification will occur at or below the ordinary high water mark.

C. Whether or not a written statement of exemption is required, all permits issued for development activities within the shoreline jurisdiction shall include a record of review indicating compliance with the shoreline master program and regulations.

D. As necessary to ensure consistency of the project with the shoreline master program and this chapter, the department may attach conditions of approval to a substantial development permit or a statement of exemption or to the approval of a development proposal that does not require either.

E. The department may issue a programmatic statement of exemption as follows:

1. For an activity for which a statement of exemption is required, the activity shall:

a. be repetitive and part of a maintenance program or other similar program;

b. have the same or similar identifiable impacts, as determined by the department, each time the activity is repeated at all sites covered by the programmatic statement of exemption; and

c. be suitable to having standard conditions that will apply to any and all sites;

2. The department shall uniformly apply conditions to each activity authorized under the programmatic statement of exemption at all locations covered by the statement of exemption. The department may require that the applicant develop and propose the uniformly applicable conditions as part of the statement of exemption application and may approve, modify or reject any of the applicant's proposed conditions. The department shall not issue a programmatic statement of exemption until applicable conditions are developed and approved;

3. Activities authorized under a programmatic statement of exemption shall be subject to inspection by the department. The applicant may be required to notify the department each time work subject to the programmatic statement of exemption is undertaken for the department to schedule inspections. In addition, the department may require the applicant to submit periodic status reports. The frequency, method and contents of the notifications and reports shall be specified as conditions in the programmatic statement of exemption;

4. The department may require revisions, impose new conditions or otherwise modify the programmatic statement of exemption or withdraw the programmatic statement of exemption and require that the applicant apply for a standard statement of exemption, if the department determines that:

a. The programmatic statement of exemption or activities authorized under the statement of exemption no longer comply with law;

b. The programmatic statement of exemption does not provide adequate regulation of the activity;

c. The programmatic statement of exemption conditions or the manner in which the conditions are implemented are not adequate to protect against the impacts resulting from the activity; or

d. A site requires site-specific regulation; and

5. If an activity covered by a programmatic statement of exemption also requires other county, state and federal approvals, to the extent feasible, the department shall

attempt to incorporate conditions that comply with those other approvals into the programmatic statement of exemption.

F. A statement of exemption is not required for maintenance of agricultural drainage [or]* agricultural waterways used by salmonids if:

1. The maintenance project is conducted in compliance with a hydraulic project approval issued by the Washington Department of Fish and Wildlife pursuant to RCW 77.55;

2. The maintenance project complies with the King County agricultural drainage assistance program as agreed to by the Washington Department of Fish and Wildlife, the department of permitting and environmental review and the department of natural resources and parks, and as reviewed by the Washington Department of Ecology;

3. The person performing the agricultural drainage maintenance and the land owner has attended training provided by King County on the King County agricultural drainage assistance program and the best management practices required under that program; and

4. The maintenance project complies with the requirements of K.C.C. chapter 16.82. (Ord. 17539 § 57, 2013: Ord. 17420 § 106, 2012: Ord. 16985 § 58, 2010: Ord. 3688 § 801, 1978. Formerly K.C.C. 25.32.010).

***Reviser's notes: Ordinance 17539, Sections 44, 45, 46, 52, 53, 55 and 57, do not apply in the shoreline jurisdiction until the effective date of the Washington state Department of Ecology's approval of the amendments as provided in RCW 90.58.090 and K.C.C. 20.12.205.**

***Language added but not underlined in Ordinance 17539. See K.C.C. 1.24.075.**

21A.25.300 Permits - prerequisite to other permits. In the case of development subject to the permit requirements of this chapter, King County shall not issue any other permit for such development until such time as approval has been granted under this chapter. Any development subsequently authorized by King County shall be subject to the same terms and conditions that apply to the development authorized under this chapter. (Ord. 16985 § 60, 2010: Ord. 3688 § 802, 1978. Formerly K.C.C. 25.32.020).

21A.25.310 Application review for expansion or replacement of a nonconforming use or development. The review of applications for the expansion or replacement of a nonconforming use or development shall be in accordance with K.C.C. chapter 21A.32. (Ord. 16985 § 62, 2010: Ord. 12196 § 59, 1996: Ord. 11792 § 36, 1995: Ord. 5734 § 16, 1981: Ord. 3688 § 806, 1978. Formerly K.C.C. 25.32.060).

21A.25.320 Appeals.

A. Appeals from the final decision of the county with regard to shoreline management shall be governed solely by RCW 90.58.180.

B. The effective date of King County's decision shall be the date of filing with the Department of Ecology as defined in RCW 90.58.140.

C. When a hearing and decision has occurred under K.C.C. 25.32.080, as recodified by Ordinance 16985*, and the examiner's recommendation with regard to disposition of a proposed development under K.C.C. Titles 20 and 21A requires King County council action, the final decision of the county shall be effective on the date of filing as defined in RCW 90.58.140 for the purposes of appeal as provided in RCW 90.50.140. However, development may not occur until the King County council has taken final action on the examiner's recommendation required by K.C.C. Titles 20 and 21A.

(Ord. 16985 § 64, 2010: Ord. 12196 § 62, 1996: Ord. 3688 § 810, 1978. Formerly K.C.C. 25.32.100).

***Reviser's note: K.C.C. 25.32.080 was repealed by Ordinance 16985, Section 137.**

21A.26 DEVELOPMENT STANDARDS - COMMUNICATION FACILITIES

Sections:

21A.26.010 Purpose.
21A.26.020 Exemptions.
21A.26.030 Applicability.
21A.26.050 Setback requirements.
21A.26.060 Landscaping requirements.
21A.26.070 Color and lighting standards.
21A.26.080 Fencing and NIER warning signs.
21A.26.090 Interference.
21A.26.100 NIER exposure standards.
21A.26.110 NIER measurements and calculations.
21A.26.120 Measurements and monitoring.
21A.26.130 Shock and burn standard.
21A.26.140 Modifications.
21A.26.150 Consolidation.
21A.26.160 Supplemental application requirements.
21A.26.170 Notification requirements.
21A.26.180 NIER compliance criteria.
21A.26.190 NIER enforcement.
21A.26.200 Periodic review of NIER standard.
21A.26.210 State regulation.

21A.26.010 Purpose. The purpose of this chapter is to establish guidelines for the siting of towers and antennas. The goals of this chapter are to:

A. Encourage the location of towers in nonresidential areas and minimize the total number of towers throughout the community;

B. Strongly encourage the joint use of new and existing tower sites;

C. Encourage users of towers and antennas to locate them, to the extent possible, in areas where the adverse impact on the community is minimal;

D. Encourage users of towers and antennas to configure them in a way that minimizes the adverse visual impact of the towers and antennas;

E. Enhance the ability of the providers of telecommunications services to provide such services to the community quickly, effectively and efficiently; and

F. Limiting exposures to NIER consistent with Federal Communication Commission statutes. (Ord. 13129 § 12, 1998: Ord. 10870 § 490, 1993).

21A.26.020 Exemptions. The following are exempt from the provisions of this chapter and shall be permitted in all zones:

A. Industrial processing equipment and scientific or medical equipment using frequencies regulated by the Federal Communications Commission (FCC);

B. Machines and equipment that are designed and marketed as consumer products, such as microwave ovens and remote control toys;

C. The storage, shipment or display for sale of transmission equipment;

D. Radar systems for military and civilian communication and navigation;

E. Hand-held, mobile, marine and portable radio transmitters and/or receivers;

F. Two-way radio utilized for temporary or emergency services communications;

G. Licensed amateur (Ham) radio stations and citizen band stations;

H. Earth station downlink using satellite dish antennas with a diameter of less than 12 feet provided that stations in excess of one dish antennas are subject to conditional use permits;

I. Receive-only satellite dish antennas as an accessory use; and

J. Two-way radio antennas, point-to-point microwave dishes, and personal wireless service antennas that are not located on a transmission structure (lattice towers and monopoles); and

K. Any maintenance, reconstruction, repair or replacement of a conforming or nonconforming communication facility, transmission equipment, transmission structure or transmitter building; provided, that the transmission equipment does not result in noncompliance with K.C.C. 21A.26.100 and 21A.26.130.

L. In the event a building permit is required for any emergency maintenance, reconstruction, repair or replacement, filing of the building permit application shall not be required until 30 days after the completion of such emergency activities. In the event a building permit is required for nonemergency maintenance, reconstruction, repair or replacement, filing of the building permit application shall be required prior to the commencement of such nonemergency activities. (Ord. 17191 § 42, 2011: Ord. 10870 § 491, 1993).

21A.26.030 Applicability. The standards and process requirements of this chapter supersede all other review process, setback or landscaping requirements of this title. All communication facilities that are not exempt under K.C.C. 21A.26.020 shall comply with this chapter as follows:

A. New communications facilities, with the exception of consolidations, shall comply with K.C.C 21A.26.020 through 21A.26.130 and K.C.C. 21A.26.160 through 21A.26.190;

B. Modified communications facilities, with the exception of consolidations, shall comply with standards as provided in K.C.C. 21A.26.020, K.C.C. 21A.26.060 through 21A.26.140, and 21A.26.160 through 21A.26.190;

C. Consolidations shall comply with standards as provided in K.C.C. 21A.26.020, K.C.C. 21A.26.060 through 21A.26.130, and K.C.C. 21A.26.150 through 21A.26.190; and

D. New, modified or consolidated minor communication facilities shall comply with the standards of this chapter and K.C.C. chapter 21A.27. In the case of a conflict between this chapter and K.C.C. chapter 21A.27, [K.C.C.] chapter 21.27 shall apply. (Ord. 17191 § 43, 2011 Ord. 17029 § 3, 2011 (Expired 12/31/2012): Ord. 13129 § 23, 1998: Ord. 10870 § 492, 1993).

21A.26.050 Setback requirements. Except as outlined for modifications and consolidations pursuant to K.C.C. 21A.26.140 and 21A.26.150 or when setbacks are increased to ensure compliance with NIER exposure limits, communication facilities shall comply with the following setbacks:

A. Transmission structures, other than those for minor communication facilities, that do not exceed the height limit of the zone in which they are located shall be set back from the property line as required for other structures by the zone in which such transmission structure is located;

B. Transmission structures, other than those for minor communication facilities, that exceed the height limit of the zone in which they are located shall be set back from property lines either a minimum of fifty feet or one foot for every foot in height, whichever results in the greater setback, except:

1. Transmission structures, other than those for minor communication facilities located in the A, F, NB, CB, RB, O or I zones shall be set back from the property line as required by the zone in which they are located; and

2. Transmission structures for minor communication facilities shall be set back from the property line as provided in K.C.C. 21A.27.030;

C. When two or more communication facilities share a common boundary, the setback from such boundary shall comply with the requirements of the zone in which the facilities are located, unless easements are provided:

1. On the adjoining sites that limit development to communication facilities;

2. Of sufficient depth to provide the setbacks required in subsections A and B; and

3. That provide for King County as a third party signatory to the agreement; and

D. Transmitter buildings shall be subject to the setback requirements of the zone in which they are located. (Ord. 17191 § 44, 2011: Ord. 13129 § 24, 1998: Ord. 11621 § 82, 1994: Ord. 10870 § 494, 1993).

21A.26.060 Landscaping requirements. A communication facility site shall provide landscaping as follows:

A. When the facility is located in:

1. The NB, CB, RB, O or I zone, the base of any transmission structure or transmitter building shall be landscaped with eight feet of Type II landscaping as defined by K.C.C. 21A.16.040B, if there is no existing landscaping consistent with K.C.C. chapter 21A.16 along the lot line abutting R, UR, or RA zoned properties.

2. The A, F or M zone, the base of the transmission structure or transmitter building shall be landscaped with ten feet of Type III landscaping (groundcover may be excluded) as defined by K.C.C. 21A.16.040C, if the base of such transmission structure or transmitter building is within three hundred feet of any lot line abutting R, UR, or RA zoned properties.

3. The R, UR or RA zone, the base of any transmission structure or transmitter building shall be landscaped with ten feet of Type I landscaping as defined by K.C.C. 21A.16.040A.

B. When a security fence is used to prevent access onto a transmission structure or transmitter building, any landscaping required pursuant to K.C.C. 21A.26.060A shall be placed outward of such security fence.

C. When a security fence is used:

1. In the NB, CB, RB, O or I zone, wood slats shall be woven into the security fence if made of chain-link material.

2. In the R, UR or RA zone, climbing evergreen shrubs or vines capable of growing on the fence shall supplement any landscaping required pursuant to K.C.C. 21A.26.060A.

D. Landscaping shall be planted according to accepted practice in good soil and maintained in good condition at all times. Landscaping shall be planted as a yard improvement at or before the time of completion of the first structure or within a reasonable time thereafter, considering weather and planting conditions.

E. Existing vegetation may be used and/or supplemented with additional vegetation to comply with the requirements of K.C.C. 21A.26.060A.

F. The director may waive or modify the provisions for landscaping at the base of the transmission support structure and equipment buildings when:

1. Existing structures on the site or the screening effects of existing vegetation on the site or along the site perimeter would preclude the ability to view the base of the tower or equipment building, or

2. The required landscaping is accessible to grazing animals and the animals would be better protected by placement of landscape materials within any proposed fencing or by the use of alternative landscaping vegetation that would not be toxic to the animals. (Ord. 13129 § 15, 1998: Ord. 10870 § 495, 1993).

21A.26.070 Color and lighting standards. Except as specifically required by the Federal Aviation Administration ("FAA") or the FCC, transmission structures shall:

A. Use colors such as grey, blue or green which reduce their visual impacts; provided, wooden poles do not have to be painted; and

B. Not be illuminated, except transmitter buildings may use lighting for security reasons which is compatible with the surrounding neighborhood. (Ord. 10870 § 496, 1993).

21A.26.080 Fencing and NIER warning signs. Communication facility sites shall be:

A. Fenced in a manner which prevents access by the public to transmission structures and/or areas of the site where NIER or shock/burn levels are exceeded. This may be modified if natural features, such as an adjoining waterway, or a topographic feature preclude access;

B. Signed to warn the public of areas of the site where:

1. NIER standards are exceeded; and
2. Potential risks for shocks or burns are present. (Ord. 10870 § 497, 1993).

21A.26.090 Interference. Permit applications for communication facilities shall include:

A. A statement describing the nature and extent of interference which may be caused by the proposed communication facility and the applicant's responsibilities under FCC rules and regulations;

B. Unless the department determines that there will be no noticeable interference from the proposed communication facility, notification of expected interference shall be provided as specified in K.C.C. 21A.26.170; and

C. General information concerning the causes of interference and steps which can be taken to reduce or eliminate it. (Ord. 10870 § 498, 1993).

21A.26.100 NIER exposure standards. To prevent whole-body energy absorption of .08 W/Kg or more, a communication facility, by itself or in combination with others, shall not expose the public to NIER that exceeds the electric or magnetic field strength, or the power density, for the frequency ranges and durations described as follows:

NIER Exposure Standards (1) (6)

Frequency (2)	Mean squared electric field strength (3)	Mean squared magnetic field strength (4)	Equivalent plane-wave power density (5)
0.1 to 3	80,000	0.5	20,000
3 to 30	4,000 x (180/f^2)	0.025 x (180/f^2)	180,000/f^2
30 to 300	800	0.005	200

300 to 1500	4,000 x (f/1500)	0.025 x (f/1500)	f/1.5
1500 to 300,000	4,000	0.025	1000

(1) All standards refer to root mean squared measurements averaged over a six minute period;

(2) Frequency or f is measured in megahertz (MHz);

(3) Electric field strength is expressed in volts squared per meter squared (V^2/m^2);

(4) Magnetic field strength is expressed in amperes squared per meter squared (A^2/m^2); and

(5) Power density is expressed in microwatts per centimeter squared (uW/cm^2).

(6) Peak NIER levels shall not exceed the following equivalent plane-wave power densities:

a. Twenty times the average values in the frequencies below 300 MHz;

b. 4,000 uW/cm^2 in the frequencies between 300 Mhz to 6,000 MHz;

c. (f/1.5)uW/cm^2 in the frequencies 6,000 MHz to 30,000 MHz; and

d. 20,000 uW/cm^2 in the frequencies above 30 GHz.

(Ord. 10870 § 499, 1993).

21A.26.110 NIER measurements and calculations. NIER levels shall be measured and calculated as follows:

A. When measuring NIER for compliance with K.C.C. 21A.26.100:

1. Measuring equipment used shall be generally recognized by the Environmental Protection Agency (EPA), National Council on Radiation Protection and Measurement (NCRPM), American National Standards Institute (ANSI), or National Bureau of Standards (NBS) as suitable for measuring NIER at frequencies and power levels of the proposed and existing sources of NIER;

2. Measurement equipment shall be calibrated as recommended by the manufacturer in accordance with methods used by the NBS and ANSI, whichever has the most current standard;

3. The effect of contributing individual sources of NIER within the frequency range of a broadband measuring instrument may be specified by separate measurement of these sources using a narrowband measuring instrument;

4. NIER measurements shall be taken when and where NIER levels are expected to be highest due to operating or environmental conditions;

5. NIER measurements shall be taken along the perimeter of the communication facility site and other areas on-site or off-site where the health department deems necessary to take measurements; and

6. NIER measurements shall be taken following spatial averaging procedures generally recognized and used by experts in the field of RF measurement or other procedures recognized by the FCC, EPA, NCRPM, ANSI, NBS;

B. NIER calculations shall be consistent with the FCC, Office of Science and Technology (OST) bulletin 65 or other engineering practices recognized by the EPA, NCRPM, ANSI, NBS or similarly qualified organization; and

C. Measurements and calculations shall be certified by a licensed professional engineer and shall be accompanied by an explanation of the protocol, methods, equipment, and assumptions used. (Ord. 10870 § 500, 1993).

21A.26.120 Measurements and monitoring.

A. The department of public health shall measure or contract for measurement of NIER levels as necessary to insure that the NIER standard is not being exceeded.

B. If the NIER level of an existing major communication facility has not been measured within 3 years of June 28, 1993, such facility shall be measured within 120 days from June 28, 1993. All major communication facilities shall be measured every third year thereafter. The measurements shall be submitted to the department of public health for review within 60 days of measurement. The department shall be reimbursed for its review of the measurements pursuant to this section.

C. New major communication facilities shall be measured within 120 days from the commencement of the operation and every third year thereafter. The department shall be reimbursed for its review of the measurements pursuant to this section.

D. The department of public health shall have the authority to assess fees for the cost of plan review. The fee shall be based upon the time required by staff, including overhead cost, for plan review. (Ord. 10870 § 501, 1993).

21A.26.130 Shock and burn standard. The communication facility shall not emit radiation such that the public will be exposed to shock and burn in excess of the standards contained in ANSI C-95.1 or subsequent amendments thereto recognized by ANSI. (Ord. 10870 § 502, 1993).

21A.26.140 Modifications.

A. Cumulative modifications of conforming or nonconforming communication facilities, transmission structures or transmission equipment that do not increase the overall height of the transmission structure or transmission equipment by more than thirty percent shall be allowed subject to the following:

1. A nonconformance with respect to the transmission structure shall not be created or increased, except as otherwise provided above as to height;

2. Existing perimeter vegetation or landscaping shall not be reduced;

3. The modification brings the facility, structure or equipment into compliance with K.C.C. 21A.26.100 and 21A.26.130. The applicant shall provide King County a detailed certification of compliance with these provisions that has been prepared by a licensed professional engineer; and

4. For minor communication facilities, the allowances for increased height established by K.C.C. chapter 21A.27 shall be complied with.

B. Except for consolidations allowed by K.C.C. 21A.26.150, modifications which increase the overall height of the transmission structure or transmission equipment by more than thirty percent shall be subject to the following:

1. Applications for such transmission structures shall be reviewed in accordance with the applicable process specified in this chapter; and

2. Such transmission structures shall comply with K.C.C. 21A.26.020, K.C.C. 21A.26.060 through 21A.26.140, K.C.C. 21A.26.160 through 21A.26.190 and, for minor communication facilities, with K.C.C. chapter 21A.27. (Ord. 17841 § 45, 2014: Ord. 17191 § 45, 2011: Ord. 13129 § 25, 1998: Ord. 10870 § 503, 1993).

21A.26.150 Consolidation. Consolidation of two or more existing transmission structures may be permitted subject to the following:

A. If the consolidated transmission structure cannot meet the requirements of K.C.C. 21A.26.050, it shall be located on the portion of the parcel on which it is situated which, giving consideration to the following, provide the optimum practical setback from adjacent properties:

1. Topography and dimensions of the site,

2. (in the case of a consolidation) to any existing structures to be retained, and

3. (in the case of a guyed transmission tower) to guy anchor placement necessary to assure structural integrity of the consolidated transmission tower.

Consolidated transmission structures shall be set back from abutting residential property a minimum of ten percent of the height of the consolidated transmission structure, but in all cases no less than 100 feet;

B. If a consolidation involves the removal of transmission structures from two or more different sites and if a consolidated transmission structure is to be erected on one of those sites, it shall be erected on the site which provides for the greatest compliance with the standards of this chapter;

C. All existing transmission equipment on the site of a communication facility which does not comply with the provisions of this chapter shall be relocated to the consolidated transmission structure before the relocation of transmission equipment from a non-exempt off-site, conforming communication facility is permitted;

D. The consolidation shall eliminate NIER and electrical current levels attributable to the consolidating transmission equipment which exceed the limits of K.C.C. 21A.26.100 and 21A.26.130;

E. Any transmission structure to be removed as part of a consolidation shall be removed within 12 months of relocation of the transmitting equipment;

F. Consolidation shall result in a net reduction in the number of transmission structures; and

G. Consolidated facilities shall require a conditional use permit. (Ord. 10870 § 504, 1993).

21A.26.160 Supplemental application requirements.

A. In addition to any required site plan, a permit application for a communication facility shall also include:

1. A site plan that shows existing and proposed transmission structures; guy wire anchors; warning signs; fencing and access restrictions;

2. A report by a licensed professional engineer demonstrating compliance with applicable structural standards of K.C.C. Title 16, and describing the general structural capacity of any proposed transmission structure(s), including:

a. The number and type of antennas that can be accommodated; and

b. The basis for the calculation of capacity;

3. A report by a state licensed professional engineer that includes the following:

a. A description of any proposed transmission tower(s) or structure(s), including height above grade, materials, color and lighting; and

b. Information related to interference required by K.C.C. 21A.26.090.

B. Where a permit for a non-exempt communication facility is required, the application shall also include the following information:

1. The name and address of the operator(s) of proposed and existing antennas on the site;

2. The height of any proposed antennas;

3. Manufacture, type, and model of such antennas;

4. Frequency, modulation and class or service;

5. Transmission and maximum effective radiated power;

6. Direction of maximum lobes and associated radiation;

7. The calculated NIER levels attributable to the proposed antennas at points along the property line and other areas off-site which are higher than the property line points, as well as calculated power density (NIER levels) in areas that are expected to be unfenced on-site;

8. For a major communication facility, if there is another major communication facility within one mile of the site of the proposed facility, the level of NIER at the points identified in subsection B.7. as measured within thirty days prior to application; and

9. For a minor communication facility, if there is an existing major communication facility within one-half mile of the site of the proposed facility, the level of NIER at the points identified in subsection B.7. as measured within thirty days prior to the application. (Ord. 17191 § 46, 2011: Ord. 10870 § 505, 1993).

21A.26.170 Notification requirements. Notification of a permit application shall be given to adjacent property owners within a 500 foot radius and the local community council. The area within which mailed notice is required shall be expanded to include at least 20 different owners in rural or lightly inhabited areas or in other appropriate cases to the extent the department determines is necessary. The standards of published notice and posting of property required by K.C.C. 21A.42 shall be pursuant to K.C.C. 21A.40. (Ord. 10870 § 506, 1993).

21A.26.180 NIER compliance criteria. The department of public health shall consider the following criteria in determining compliance with K.C.C. 21A.26.100:

A. The number and location of points at which levels have been determined to exceed NIER standards;

B. The duration of exposure to NIER levels above the standard;

C. The extent by which the levels measured at such points exceed the standards established by this chapter; and

D. The relative contribution of individual sources in a multiple source environment. (Ord. 10870 § 507, 1993).

21A.26.190 NIER enforcement.

A. The department of public health shall be responsible for the enforcement of the provisions of K.C.C. 21A.26.100 in accordance with K.C.C. 23. The department director shall allow no more than 10 days to elapse from the date of a violation before corrective action is commenced. If this deadline cannot be met, the director shall issue a stop work order.

B. If the approved NIER standard is exceeded in an area where there are multiple users and transmission equipment, all users shall share in the NIER the reduction will adequately protect the proposed development and the sensitive area; reductions, scaled proportionally to their current discharges. (Ord. 10870 § 508, 1993).

21A.26.200 Periodic review of NIER standard. The department of public health shall review the county approved NIER standard every three years and report to the chair of the council on whether it should be changed. (Ord. 10870 § 509, 1993).

21A.26.210 State regulation.

A. If state regulations establish a NIER exposure standard which is more restrictive than the county standard, the state standard shall automatically become effective.

B. If such state standards are intended to preempt local enforcement with respect to specific sections of this chapter, said sections shall automatically be deemed ineffective.

C. Application of the provisions of this chapter shall be subject to any rule, regulation, order or decision of any state or federal court or government agency with which such communication facility is obligated to comply. (Ord. 10870 § 510, 1993).

21A.27 DEVELOPMENT STANDARDS - MINOR COMMUNICATION FACILITIES

21A.27.010 Preapplication community meetings.

21A.27.020 Review process.
21A.27.030 Development standards for transmission support structures.
21A.27.040 Visual compatibility standards.
21A.27.050 Visual impact - additional standards to reduce degree
21A.27.060 Time limits and establishment period.
21A.27.070 Cessation of use.
21A.27.080 Colocation.
21A.27.090 Modifications.
21A.27.100 Antennas.
21A.27.110 Location within street, utility and railroad rights-of- way.
21A.27.120 Public parks and open spaces owned by King County.
21A.27.130 Criteria for determining technical feasibility.
21A.27.140 Applicability to vested applications.
21A.27.150 Potential annexation areas.
21A.27.160 Technical evaluation.

21A.27.010 Preapplication community meetings. When a new transmission support structure is proposed, a community meeting shall be convened by the applicant prior to submittal of an application.

A. At least two weeks in advance, notice of the meeting shall be provided as follows:

1. Published in the local paper and mailed to the department, and

2. Mailed notice shall be provided to all property owners within five hundred feet or at least twenty of the nearest property owners, whichever is greater, as required by K.C.C. 21A.26.170 of any potential sites, identified by the applicant for possible development, to be discussed at the community meeting. When the proposed transmission support structure exceeds a height of one hundred twenty feet, the mailed notice shall be provided to all property owners within one thousand feet. The mailed notice shall at a minimum contain a brief description and purpose of the project, the estimated height, approximate location noted on an assessor map with address and parcel number, photo or sketch of proposed facility, a statement that alternative sites proposed by citizens can be presented at the meeting that will be considered by the applicant, a contact name and telephone number to obtain additional information and other information deemed necessary by King County. Because the purpose of the community meeting is to promote early discussion, applicants are encouraged to note any changes to the conceptual information presented in the mailed notice when they submit an application.

B. At the community meeting at which at least one employee of the department of permitting and environmental review, assigned by the director of the department, shall be in attendance, the applicant shall provide information relative to existing transmission support structures and other nonresidential structures, such as water towers and electrical transmission lines, within one-quarter mile of potential sites, and shall discuss reasons why those existing structures are unfeasible. Furthermore, any alternative sites within one-quarter mile, identified by community members and provided to the applicant in writing at least five days in advance of the meeting, shall be evaluated by the applicant to the extent possible given the timeframe, and discussed at the meeting. A listing of the sites, identified in writing and provided to the applicant at or before the community meetings, shall be submitted to the department with the proposed application. Applicants shall also provide a list of meeting attendees and those receiving mailed notice and a record of the published meeting notice at the time of application submittal. (Ord. 17420 § 107, 2012: 17416 § 17, 2012: Ord. 13129 § 2, 1998. Formerly K.C.C. 21A.26.300).

21A.27.020 Review process. Minor communication facilities shall be reviewed as follows:

MINOR COMMUNICATION FACILITIES - REVIEW PROCESS

Zone District(s)	Antenna	Transmission Support Structure
I, RB, CB NB, O	P	P C[1]
F, M	P	P C[1]
UR, RA, A	P	P[2] C[1 and 2]
R1 - R48	P	P C[1]

P - Permitted Use

C - Conditional Use

[1] If the proposal exceeds the development standards of this chapter contained in K.C.C. 21A.27.030 for transmission support structures, the proposal shall be reviewed through this process.

[2] The proposed transmission support structure shall not be located on any RA or A zoned site for which the development rights have been encumbered by the farmlands preservation program.

(Ord. 13129 § 3, 1998. Formerly K.C.C. 21A.26.310).

21A.27.030 Development standards for transmission support structures. A new transmission support structure exceeding the standards of this section are subject to the conditional use permit process as outlined in K.C.C. 21A.27.020. These provisions do not apply to transmission support structures that are being modified or replaced pursuant to the provisions of K.C.C. 21A.27.090 or replace an existing transmission support structure.

MINOR COMMUNICATION FACILITIES - DEVELOPMENT STANDARDS

Zone District(s)	Height and Location Of Tower	Setbacks 1
I	140 feet high	50 feet (or one foot setback for every one foot in height) from any UR, RA, A, or R1 - R48 zone property, whichever provides the greatest setback
RB, CB	120 feet high	SAME AS ABOVE
NB, O, UR, RA, A, R1 - R48	60 feet high	SAME AS ABOVE
F, M	140 feet high	SAME AS ABOVE

[1]Setbacks may be modified to achieve additional screening, see K.C.C. 21A.27.040 or as provided in K.C.C. 21A.26.050.

(Ord. 17841 § 46, 2014: Ord. 13129 § 4, 1998. Formerly K.C.C. 21A.26.320).

21A.27.040 Visual compatibility standards. With consideration to engineering and structural requirements, and the coverage patterns the provider is seeking to achieve, minor communication facilities shall be subject to the following visual compatibility standards in addition to K.C.C. 21A.44.040.

A. Antenna should, to the extent practicable, reflect the visual characteristics of the structure to which it is attached. This should be achieved through the use of colors and materials, as appropriate. When located on structures such as buildings or water towers, the placement of the antenna on the structure should reflect the following order of priority in order to minimize visual impact:

1. A location as close as possible to the center of the structure, and

2. long the outer edges or side-mounted, provided that in this instance, additional means such as screens should be considered and may be required by the department on a case-by-case basis, and

3. When located on the outer edge or side-mounted, be placed on the portion of the structure less likely to be seen from adjacent lands containing, in descending order of priority: existing residences, public parks and open spaces, and public roadways.

B. To the extent that there is no conflict with the color and lighting requirements of the Federal Communication Commission and the Federal Aviation Administration for aircraft safety purposes, transmission support structures shall be designed to blend with existing surroundings to the extent feasible. This should be achieved through the use of compatible colors and materials, and alternative site placement to allow the use of topography, existing vegetation or other structures to screen the proposed transmission support structure from adjacent lands containing, in descending order of priority: existing residences, public parks and open spaces, and public roadways.

C. The setback provisions of K.C.C. 21A.27.030 may be waived by the department or the examiner, in order to achieve greater levels of screening than that which would be available by using the stated setback, during the course of the review process described in K.C.C. 21A.27.020. In waiving the requirement, the department or examiner shall consider the protection of adjacent lands on the basis of the priorities stated in subsections A. and B. of this section. (Ord. 13129 § 5, 1998. Formerly K.C.C. 21A.26.330).

21A.27.050 Visual impact - additional standards to reduce degree. The department shall also consider the following criteria and give substantial consideration to on-site location and setback flexibility authorized in K.C.C. 21A.27.040.C. when reviewing applications for new free-standing towers and determining appropriate levels of mitigation:

A. Whether existing trees and vegetation can be preserved in such a manner that would most effectively screen the proposed tower from residences on adjacent properties;

B Whether there are any natural land-forms, such as hills or other topographic breaks, that can be utilized to screen the tower from adjacent residences;

C. Whether the applicant has utilized a tower design that reduces the silhouette of the portion of the tower extending above the height of surrounding trees; and

D. Whether the factors of subsections B. and C. can be addressed and the height of the proposed tower be reduced and still provide the level of coverage proposed by the applicant. (Ord. 13129 § 17, 1998. Formerly K.C.C. 21A.26.340).

21A.27.060 Time limits and establishment period. The building permit shall become null and void if construction of the transmission support structure has not begun within one year after the effective date of permit approval or if antennas are not installed within one hundred eighty days after construction of the transmission support structure. Extensions shall be allowed only in accordance with the criteria specified for

building permit extensions in K.C.C. 16.04.05013. (Ord. 13129 § 6, 1998. Formerly K.C.C. 21A.26.350).

21A.27.070 Minor communication facilities - cessation of use. Antenna shall be removed from transmission support structures within one hundred eighty days after the antenna is no longer operational. Transmission support structures for wireless communication facilities shall be removed within one year of the date the last antenna is removed. (Ord. 13129 § 7, 1998. Formerly K.C.C. 21A.26.360).

21A.27.080 Colocation.

A. Upon application for a conditional use permit or a building permit for a new free-standing tower, whichever is required first, the applicant shall provide a map showing all existing transmission support structures or other suitable nonresidential structures located within one-quarter mile of the proposed structure with consideration given to engineering and structural requirements. No new transmission support structure shall be permitted if an existing structure suitable for attachment of an antenna or collocation [colocation] is located within one-quarter mile, unless the applicant demonstrates that the existing structure or a new structure complying with K.C.C. 21A.27.090:

1. would be physically or technologically unfeasible pursuant to K.C.C. 21A.27.130, or
2. is not made available for sale or lease by the owner, or
3. is not made available at a market rate cost, or
4. would result in conflicts with Federal Aviation Administration height limitations.

B. The burden of proof shall be on the applicant to show that a suitable existing, modified or replacement structure for mounting of antenna or collocation [colocation] cannot be reasonably or economically used in accordance with these criteria.

C. Prior to the receipt of a building permit to construct a new tower, the applicant shall file a letter agreeing to allow collocation [colocation] on the tower with the department. The agreement shall commit the applicant to provide, either at a market rate cost or at another cost basis agreeable to the affected parties, the opportunity to collocate [colocation] the antenna of other service providers on the applicant's proposed tower to the extent that such collocation [colocation] is technically feasible for the affected parties.

D. All new or modified transmission support structures shall be constructed in a manner that would provide sufficient structural strength to allow the collocation [colocation] of additional antenna from other service providers. (Ord. 14045 § 50, 2001: Ord. 13129 § 8, 1998. Formerly K.C.C. 21A.26.370).

21A.27.090 Modifications.

A. Antenna modifications consistent with K.C.C. 21A.27.100 are permitted outright. Antenna modifications consistent with K.C.C. 21A.27.100 that are proposed for a transmission support structure that was approved by a conditional use permit are permitted outright, notwithstanding conditions in the conditional use permit that limit the number of antennae allowed on the transmission support structure.

B.1. Except as otherwise provided in subsection B.2. of this section, modifications to transmission support structures are permitted outright, if there is no increase in the height of the transmission support structure.

2. A modification to increase the height of a transmission support structure is permitted outright if the increase in height is:

a. necessary to accommodate the actual collocation of the antenna of other service providers, or to accommodate the current providers antenna required to use new technology, such as digital transmissions;

b. limited to no more than forty feet above the height of the existing transmission support structure; or

c. the transmission support structure is located in the rural area zone or a residential zone, the proposed height exceeds sixty feet and the applicant demonstrates the proposed height is required to meet the proposed area of coverage.

3. If modification to increase the height of a transmission support structure is proposed in the rural area zone or a residential zone:

a. notice and a comment period shall be provided consistent with K.C.C. 20.20.060;

b. If the need for additional height is challenged within the comment period specified, a technical evaluation under K.C.C. 21A.27.160 shall be conducted; and

c. The department may approve, require additional mitigation, or deny the proposed height increase on the basis of this technical evaluation. (Ord. 17841 § 47, 2014: Ord. 17539 § 58, 2013: Ord. 14045 § 51, 2001: Ord. 13129 § 9, 1998. Formerly K.C.C.21A.26.380).

21A.27.100 Antennas. Antennas meeting the standards of this section are permitted outright. An antenna shall not extend more than six feet horizontally from any structure to which it is attached. Furthermore, an antenna shall not extend vertically above the uppermost portion of the structure to which it is mounted or attached, as follows:

A. Not more than twenty feet on a nonresidential structure, and

B. Not more than fifteen feet on a residential structure. (Ord. 13129 § 10, 1998. Formerly K.C.C. 21A.26.390).

21A.27.110 Location within street, utility and railroad rights-of-way.

A. The mounting of antenna upon existing structures, such as light and power poles, located within publicly or privately maintained street, utility and railroad right-of-ways is permitted outright. If an existing structure within a street, utility, or railroad rights-of-ways cannot accommodate an antenna due to structural deficiency or does not have the height required to provide adequate signal coverage, the structure may be replaced with a new structure that will serve the original purpose and will not exceed the original height by forty feet. However, minor communication facilities within street, utility and railroad right-of-way that propose the construction of a separate structure used solely for antenna shall be subject to the zoning provisions applicable to the property abutting the portion of right-of-way where the structure is proposed except that the setbacks specified in the zoning code shall not apply. Setbacks shall be those specified in the road design standards. In cases where the abutting property on either side of the right-of-way has different zoning, the more restrictive zoning provisions shall apply.

B. The placement of antenna on existing or replacement structures within street, utility or railroad rights-of-way is the preferred alternative in residential neighborhoods and the Rural Areas and the feasibility of such placement shall be considered by the county whenever evaluating a proposal for a new transmission support structure, except for a new structure that is proposed to collocate antenna for two or more separate service providers. (Ord. 14045 § 52, 2001: Ord. 13129 § 11, 1998. Formerly K.C.C. 21A.26.400).

21A.27.120 Public parks and open spaces owned by King County. Within public parks and open spaces owned by King County, the placement of antennas on existing structures, such as power poles, light poles for streets and parking lots, light standards for recreational fields and communication towers, is the preferred option. If an existing structure within a county-owned park or open space cannot accommodate an

antenna due to structural deficiency, or does not have the height required to provide adequate signal coverage, the structure may be replaced with a new structure provided that the new structure will serve the original purpose and not exceed the original height by forty feet. Any height increase in excess of forty feet will require a conditional use permit.

The construction of a new free-standing tower within public parks and open spaces owned by King County shall be subject to a conditional use permit when the height of the proposed tower exceeds sixty feet. (Ord. 14045 § 53, 2001: Ord. 13129 § 14, 1998. Formerly K.C.C. 21A.26.410).

21A.27.130 Criteria for determining technical feasibility. When an applicant is required to demonstrate that an existing, modified or replacement structure is not technically feasible for collocation, the evidence submitted to corroborate that finding may consist of any of the following:

A. No existing structures are located within the geographic area required to meet the applicant's proposed area of coverage.

B. Existing structures are not of sufficient structural strength to support the applicant's proposed antenna and related equipment and the cost of modification or replacement of an existing structure to allow collocation would equal or exceed that of the construction of the new structure.

C. Existing structures or structures modified consistent with K.C.C. 21A.27.090 would not be of sufficient height required to meet the applicant's proposed area of coverage or allow microwave connection to other sites operated by the applicant.

D. The applicant's proposed antenna would cause interference between the proposed and existing antenna, and that even the additional height permitted for collocations pursuant to K.C.C. 21A.27.090 would not ensure enough separation to avoid such interference. (Ord. 14045 § 54, 2001: Ord. 13129 § 16, 1998. Formerly K.C.C. 21A.26.420).

21A.27.140 Applicability to vested applications. The standards of Ordinance 13129 shall not apply to vested applications for conditional use permits and building permits for transmission support structures. Furthermore, the standards, except for the antenna mounting provisions of K.C.C. 21A.27.100, shall not apply to new building permits required to construct a transmission support structure that been authorized through a prior-vested or prior-approved conditional use or special use permit. (Ord. 13129 § 18, 1998. Formerly K.C.C. 21A.26.430).

21A.27.150 Standards within city potential annexation areas. Within the approved potential annexation areas of a city, the agreed upon permitting jurisdiction shall apply the provisions of the applicable city as provided for by an interlocal agreement that has been entered into between the city and the county. The city standards would be applied when adopted in an ordinance by King County. (Ord. 13129 § 21, 1998. Formerly K.C.C. 21A.26.440).

21A.27.160 Technical evaluation. The department of permitting and environmental review shall retain the services of a registered professional electrical engineer accredited by the state of Washington who holds a Federal Communications General Radio telephone Operator License. The engineer will provide technical evaluation of permit applications for minor communications facilities. The department is authorized to charge the applicant for these services. The specifications for an RFP to retain a consulting engineer shall specify at least the qualifications noted above, the capacity to provide a three week turnaround on data review, a request for a proposed fixed fee for services and shall state a preference for a qualified professional with a

balance of experience in both the private and public sectors. Such a review shall be performed in a timely manner, be limited to the data necessary to establish findings pursuant to K.C.C. 21A.27.130.C. and 21A.27.130.D, and avoid any conflicts with the department's duty to review permit applications within one hundred twenty days of acceptance pursuant to RCW 36.70B.090. This review shall be performed when requested by affected residents pursuant to K.C.C. 21A.27.090. (Ord. 17420 § 108, 2012: Ord. 13129 § 22, 1998. Formerly K.C.C. 21A.26.450).

21A.28 DEVELOPMENT STANDARDS - ADEQUACY OF PUBLIC FACILITIES AND SERVICES

Sections:

21A.28.010 Purpose.
21A.28.020 General requirements.
21A.28.030 Adequate sewage disposal.
21A.28.040 Adequate water supply.
21A.28.050 Surface water management.
21A.28.060 Adequate roads.
21A.28.120 Adequate vehicular access.
21A.28.130 Adequate fire protection.
21A.28.140 School concurrency - Applicability and relationship to fees.
21A.28.150 Findings, recommendations, and decisions regarding school capacities.
21A.28.152 Submission of district capital facilities plan and data.
21A.28.154 School technical review committee.
21A.28.156 Annual council review.
21A.28.160 School concurrency standard.
21A.28.180 Credit for improvements.

21A.28.010 Purpose. The purpose of this chapter is to ensure that public facilities and services necessary to support development are adequate or will be provided in a timely manner consistent with the Public Facilities and Services planning goal of the Washington State Growth Management Act of 1990 by:

A. Specifying the on-site and off-site facilities and services that must be in place or otherwise assured of timely provision prior to development;

B. Allocating the cost of those facilities and services fairly; and

C. Providing a general framework for relating development standards and other requirements of this code to:

1. Adopted service level standards for public facilities and services;
2. Procedural requirements for phasing development projects to ensure that services are provided as development occurs; and
3. The review of development permit applications. (Ord. 10870 § 511, 1993).

21A.28.020 General requirements.

A. All new development proposals including any use, activity or structure allowed by K.C.C. chapter 21A.08 that requires King County approval shall be adequately served by the following facilities and services prior to the time of occupancy, recording or other land use approval, as further specified in this chapter:

1. sewage disposal;
2. water supply;
3. surface water management;
4. roads and access;

5. fire protection service; and
6. schools.

B. All new development proposals for building permits, plats, short plats, urban planned developments, fully contained communities and binding site plans, that will be served by a sewer or water district, shall include a certificate of water availability and a certificate of sewer availability to demonstrate compliance with this chapter and other provisions of the King County Code, the King County Comprehensive Plan and the Growth Management Act.

C. Regardless of the number of sequential permits required, the provisions of this chapter shall be applied only once to any single development proposal. If changes and modifications result in impacts not considered when the proposal was first approved, the county shall consider the revised proposal as a new development proposal. (Ord. 13694 § 91, 1999: Ord. 11621 § 83, 1994: Ord. 10870 § 512, 1993).

21A.28.030 Adequate sewage disposal. All new development shall be served by an adequate public or private sewage disposal system, including both collection and treatment facilities as follows:

A. A public sewage disposal system is adequate for a development proposal provided that:

1. For the issuance of a building permit, preliminary plat or short plat approval or other land use approval, the site of the proposed development is or can be served by an existing disposal system consistent with K.C.C. Title 13, and the disposal system has been approved by the department as being consistent with applicable state and local design and operating guidelines;

2. For the issuance of a certificate of occupancy for a building or change of use permit, the approved public sewage disposal system as set forth in subsection A.1 of this section is installed to serve each building or lot;

3. For recording a final plat, final short plat or binding site plan, the approved public sewage disposal system set forth in subsection A.1 of this section shall be installed to serve each lot respectively; or a bond or similar security shall be deposited with King County for the future installation of an adequate sewage disposal system. The bond may be assigned to a utility to assure the construction of the facilities within two years of recording; and

4. For a zone reclassification or urban planned development permit, the timing of installation of required sewerage improvements shall be contained in the approving ordinance as specified in K.C.C. 20.24.230; and

B. A private individual sewage system is adequate, if an on-site sewage disposal system for each individual building or lot is installed to meet the requirements and standards of the department of public health as to lot size, soils and system design prior to issuance of a certificate of occupancy for a building or change of use permit.(Ord. 13625 § 20, 1999: Ord. 11621 § 84, 1994: Ord. 10870 § 513, 1993).

21A.28.040 Adequate water supply. All new development shall be served by an adequate public or private water supply system as follows:

A. A public water system is adequate for a development proposal only if:

1. For the issuance of a building permit, preliminary plat approval or other land use approval, the applicant demonstrates that the existing water supply system available to serve the site:

a. complies with the applicable planning, operating and design requirements of:

(1) chapters WAC 246-290 and 246-291;

(2) K.C.C. chapters 14.42 and 14.44 and K.C.C. Title 17;

(3) coordinated water system plans;

(4) K.C.C. Titles 12 and 13 and other applicable rules of the King County board of health;

(5) applicable rules of the Washington state Board of Health, Department of Health, Utilities and Transportation Commission and Department of Ecology;

(6) applicable provisions of King County groundwater management plans and watershed plans;

(7) applicable provisions of the King County Comprehensive Plan and development regulations; and

(8) any limitation or condition imposed by the county-approved comprehensive plan of the water purveyor;

b. The proposed improvements to an existing water system have been reviewed by the department and determined to comply with the design standards and conditions specified in subsection A.1.a. of this section; and

c. A proposed new water supply system has been reviewed by the department and determined to comply with the design standards and conditions specified in subsection A.1.a. of this section;

2. Before issuance of a certificate of occupancy for a building or change of use permit, the approved public water system and any system improvements in subsection A.1. of this section are installed to serve each building or lot respectively;

3. For recording a final plat, final short plat or binding site plan, either the approved public water supply system or system improvements in subsection A.1. of this section are installed to serve each lot or a bond or similar security shall be deposited with King County and may be assigned to a purveyor to assure the construction of required water facilities in Group A systems as defined by board of health regulations, within two years of recording; and

4. For a zone reclassification or urban planned development permit, the timing of installation of required water system improvements is included in the approving ordinance as specified in K.C.C. 20.24.230.

B. An on-site individual water system is adequate and the plat or short plat may receive preliminary and final approval, and a building or change of use permit may be issued as provided in K.C.C. 13.24.138 and 13.24.140. (Ord. 15032 § 36, 2004: Ord. 10870 § 514, 1993).

21A.28.050 Surface water management. All new development shall be served by an adequate surface water management system as follows:

A. The proposed system is adequate if the development proposal site is served by a surface water management system approved by the department as being consistent with the design, operating and procedural requirements of the King County Surface Water Design Manual and K.C.C. Title 9;

B. For a subdivision, zone reclassification or urban planned development, the phased installation of required surface water management improvements shall be stated in the approving ordinance as specified in K.C.C. 20.24.230. Such phasing may require that a bond or similar security be deposited with King County; and

C. A request for an adjustment of the requirements of the Surface Water Design Manual and K.C.C. Title 9 shall be reviewed in accordance with K.C.C. 9.04.050 and does not require a variance from this title unless relief is requested from a building height, setback, landscaping or other development standard in K.C.C. chapters 21A.12, 21A.14, 21A.16, 21A.18, 21A.20, 21A.22, 21A.24, 21A.26, 21A.28, 21A.30. (Ord. 15051 § 212, 2004: Ord. 10870 § 515, 1993).

21A.28.060 Adequate roads.

A. All new development shall be served by adequate roads. Roads are adequate if the development's traffic impacts on surrounding public roads are acceptable under the level-of-service standards and the compliance procedures established in K.C.C. Title 14.

B. The renewal of permits or the issuance of a new permit for existing uses constitutes a new development proposal only if it will generate additional traffic above that currently generated by the use.

C. A variance request from the road cross-section or construction standards established by K.C.C. Title 14, Roads and Bridges, shall be reviewed as set forth in K.C.C. 14.42.060 and does not require a variance from this Title unless relief is requested from a building height, setback, landscaping or other development standard set forth in K.C.C. 21A.12 through K.C.C. 21A.30. (Ord. 11621 § 85, 1994: Ord. 10870 § 516, 1993).

21A.28.120 Adequate vehicular access. All new development shall be served by adequate vehicular access as follows:

A. The property upon which the development proposed is to be located has direct access to:

1. A public or private street that meets county road standards or is formally declared acceptable by the county road engineer; or

2. The property has access to such a street over a private driveway approved by the county;

B. The proposed circulation system of a proposed subdivision, short subdivision or binding site plan shall intersect with existing and anticipated streets abutting the site at safe and convenient locations, as determined by the department and the county road engineer; and

C. Every lot upon which one or more buildings is proposed to be erected or traffic generating use is proposed to be established, shall establish safe access as follows:

1. Safe passage from the street right-of-way to building entrances for transit patrons and other pedestrians, in accordance with the design standards set forth in K.C.C. 21A.18;

2. Direct access from the street right-of-way, fire lane or a parking space to any part of the property as needed to provide public services in accordance with adopted standards (e.g. fire protection, emergency medical service, mail delivery or trash collection); and

3. Direct access from the street right-of-way, driveway, alley or other means of ingress/egress approved by King County, to all required off-street parking spaces on the premises. (Ord. 10870 § 522, 1993).

21A.28.130 Adequate fire protection. All new development shall be served by adequate fire protection as set forth below:

A. The site of the development proposed is served by a water supply system that provides at least minimum fire flow and a, road system or fire lane system that provides life safety/rescue access, and other fire protection requirements for buildings as required by K.C.C. Title 17, Fire Code and K.C.C. Title 16, Building and Construction Standards;

B. For a zone reclassification or Urban planned development, the timing of installation of required fire protection improvements shall be stated in the approving ordinance as specified in K.C.C. 20.24.230, secured with a bond or similar security, and deposited with King County; and

C. A variance request from the requirements established by K.C.C. Title 17, Fire Code, shall be reviewed as set forth in K.C.C. 17.08.090 or K.C.C. 17.10.040, and/or in Article 2 of the currently adopted edition of the International Fire Code and does not require a variance from this title unless relief is requested from a building height, setback, landscaping or other development standard set forth in K.C.C. 21A.12 through K.C.C. 21A.30. (Ord. 17837 § 90, 2014: Ord. 10870 § 523, 1993).

21A.28.140 School concurrency - Applicability and relationship to fees.

A. The school concurrency standard set out in Section 21A.28.160 shall apply to applications for preliminary plat or Urban Planned Development (UPD) approval, mobile home parks, requests for multifamily zoning, and building permits for multifamily housing projects which have not been previously evaluated for compliance with the concurrency standard.

B. The county's finding of concurrency shall be made at the time of preliminary plat or UPD approval, at the time that a request to actualize potential multifamily zoning is approved, at the time a mobile home park site plan is approved, or prior to building permit issuance for multifamily housing projects which have not been previously established for compliance with the concurrency standard. Once such a finding has been made, the development shall be considered as vested for purposes of the concurrency determination.

C. Excluded from the application of the concurrency standard are:

1. building permits for individual single family dwellings;

2. any form of housing exclusively for senior citizens, including nursing homes and retirement centers;

3. shelters for temporary placement, relocation facilities and transitional housing facilities.;

4. Replacement, reconstruction or remodeling of existing dwelling units;

5. Short subdivisions;

6. Building permits for residential units in preliminary planned unit developments which were under consideration by King County on January 22, 1991;

7. Building permits for residential units in recorded planned unit developments approved pursuant to K.C.C. Title 21 that have not yet expired per K.C.C. 21.56.060;

8. Building permits applied for by December 31, 1993, related to rezone applications to actualize potential zoning which were under consideration by King County on January 22, 1991;

9. Building permits applied for by December 31, 1993, related to residential development proposals for site plan review to fulfill P-Suffix requirements of multifamily zoning which were under consideration by King County on January 22, 1991; and

10. Any residential building permit for any development proposal for which a concurrency determination has already been made pursuant to the terms of K.C.C. Title 21A.

D. All of the development activities which are excluded from the application of the concurrency standard are subject to school impact fees imposed pursuant to Title 27.

E. The assessment and payment of impact fees are governed by and shall be subject to the provisions in K.C.C. Title 27 addressing school impact fees.

F. A certification of concurrency for a school district shall not preclude the county from collecting impact fees for the district. Impact fees may be assessed and collected as long as the fees are used to fund capital and system improvements needed to serve the new development, and as long as the use of such fees is consistent with the requirements of Chapter 82.02 RCW and this chapter. Pursuant to Chapter 82.02 RCW, impact fees may also be used to recoup capital and system improvement costs previously incurred by a school district to the extent that new growth and development will be served

by the previously constructed improvements or incurred costs. (Ord. 11621 § 87, 1994: 11157 § 25, 1993: Ord. 10870 § 524, 1993).

21A.28.150 Findings, recommendations, and decisions regarding school capacities.

A. In making a threshold determination pursuant to SEPA, the director and/or the hearing examiner, in the course of reviewing proposals for residential development including applications for plats or UPD's, mobile home parks, or multi-family zoning, and multifamily building permits, shall consider the school district's capital facilities plan as adopted by the council.

B. Documentation which the district is required to submit pursuant to section 21A.28.152 or Title 20. shall be incorporated into the record in every case without requiring the district to offer such plans and data into the record. The school district is also authorized to present testimony and documents demonstrating a lack of concurrency in the district and the inability of the district to accommodate the students to be generated by a specific development.

C. Based upon a finding that the impacts generated by the plat, the UPD, mobile home park or the multi-family development were generally not anticipated at the time of the last council review and approval of a school district capital plan and were not included in the district's long-range forecast, the director may require or recommend phasing or provision of the needed facilities and/or sites as appropriate to address the deficiency or deny or condition approval, consistent with the provisions of this chapter, the State Subdivision Act, and the State Environmental Policy Act.

D. Determinations of the examiner or director regarding concurrency can be appealed only pursuant to the provisions for appeal of the development permit process for which the determination has been made. Where no other administrative appeal process is available, an appeal may be taken to the hearing examiner using the appeal procedures for variances. Any errors in the formula identified as a result of an appeal should be referred to the council for possible modifications.

E. Where the council has not adopted an impact fee ordinance for a particular school district, the language of this section shall not affect the authority or duties of the examiner or the director pursuant to the State Environmental Policy Act or the State Subdivision Act. (Ord. 11621 § 88, 1994: 11157 § 26, 1993: Ord. 10870 § 525, 1993).

21A.28.152 Submission of district capital facilities plan and data.

A. On an annual basis, each school district shall submit the following materials to the School Technical Review Committee created pursuant to section 21A.28.154:

1. The district's capital facilities plan adopted by the school board which is consistent with the Growth Management Act.

2. The district's enrollment projections over the next six (6) years, its current enrollment and the district's enrollment projections and actual enrollment from the previous year.

3. The district's standard of service.

4. An inventory and evaluation of district facilities which address the district's standard of service.

5. The district's overall capacity over the next six (6) years, which shall be a function of the district's standard of service as measured by the number of students which can be housed in district facilities.

B. To the extent that the district's standard of service reveals a deficiency in its current facilities, the district's capital facilities plan must demonstrate a plan for achieving the standard of service, and must identify the sources of funding for building or acquiring the necessary facilities to meet the standard of service.

C. Facilities to meet future demand shall be designed to meet the adopted standards of service. If sufficient funding is not projected to be available to fully fund a capital plan which meets the standard of service, the district's capital plan should document the reason for the funding gap.

D. If an impact fee ordinance has been adopted on behalf of a school district, the district shall also submit an annual report to the School Technical Review Committee showing the capital improvements which were financed in whole or in part by the impact fees. (Ord. 11621 § 89, 1994).

21A.28.154 School technical review committee.

A. There is hereby created a school technical review committee (STRC) within King County. The committee shall consist of three county staff persons, one each from the department of permitting and environmental review, the office of financial management and the county council.

B. The committee shall be charged with reviewing each school district's capital facilities plan, enrollment projections, standard of service, the district's overall capacity for the next six years to ensure consistency with the Growth Management Act, King County Comprehensive Plan, and adopted community plans, and the district's calculation and rationale for proposed impact fees.

C. Notice of the time and place of the committee meeting where the district's documents will be considered shall be provided to the district.

D. At the meeting where the committee will review or act upon the district's documents, the district shall have the right to attend or to be represented, and shall be permitted to present testimony to the committee. Meetings shall also be open to the public.

E. In its review, the committee shall consider the following factors:

1. Whether the district's forecasting system for enrollment projections has been demonstrated to be reliable and reasonable.

2. The historic levels of funding and voter support for bond issues in the district;

3. The inability of the district to obtain the anticipated state funding or to receive voter approval for district bond issues;

4. An emergency or emergencies in the district which required the closing of a school facility or facilities resulting in a sudden and unanticipated decline in districtwide capacity; and

5. The standards of service set by school districts in similar types of communities. While community differences will be permitted, the standard established by the district should be reasonably consistent with the standards set by other school districts in communities of similar socioeconomic profile.

6. The committee shall consider the standards identified by the state concerning the ratios of certificated instructional staff to students.

F. In the event that the district's standard of service reveals a deficiency in its current facilities, the committee shall review the district's capital facilities plan to determine whether the district has identified all sources of funding necessary to achieve the standard of service.

G. The district in developing the financing plan component of the capital facilities plan shall plan on a six-year horizon and shall demonstrate its best efforts by taking the following steps:

1. Establish a six-year financing plan, and propose the necessary bond issues and levies required by and consistent with that plan and as approved by the school board

and consistent with RCW 28A.53.020 and RCW 84.52.052 and [84.52.].056 as amended; and

2. Apply to the state for funding, and comply with the state requirement for eligibility to the best of the district's ability.

H. The committee is authorized to request the school district to review and to resubmit its capital facilities plan, or to establish a different standard of service, or to review its capacity for accommodating new students, under the following circumstances:

1. The standard of service established by the district is not reasonable in light of the factors set forth in subsection E. of this section.

2. The committee finds that the district's standard of service cannot reasonably be achieved in light of the secured financial commitments and the historic levels of support in the district; or

3. Any other basis which is consistent with the provisions of this section.

I. The committee shall prepare and submit an annual report to the King County council for each school district recommending a certification of concurrency in the district, except as provided in Subsection L of this section using the school concurrency standard as set forth in K.C.C. 21A.28.160. If a school district fails to submit its capital facilities plan for review by the STRC, King County shall assume the district has adequate capacity to accommodate growth for the following six years.

J. The committee shall submit copies of its recommendation of concurrency for each school district to the director of DDES, to the hearing examiner, and to the district.

K. The committee shall recommend to the council a comprehensive plan amendment adopting the district's capital facilities plan as part of the comprehensive plan, for any plan which the committee concludes accurately reflects the district's facilities status.

L. In the event that after reviewing the district's capital facilities plan and other documents, the committee is unable to recommend certifying concurrency in a school district, the committee shall submit a statement to the council, the director and the hearing examiner stating that the committee is unable to recommend certifying concurrency in a specific school district. The committee shall recommend to the executive that he propose to the council, amendments to the land use element of the King County Comprehensive Plan or amendments to the development regulations implementing the plan to more closely conform county land use plans and school facilities plans, including but not limited to requiring mandatory phasing of plats, UPDs or multifamily development located within the district's boundary. The necessary draft amendments shall accompany such recommendations. (Ord. 17420 § 109, 2012: Ord. 16267 § 62, 2008: Ord. 11621 § 90, 1994).

21A.28.156 Annual council review.

A. On at least an annual basis, the King County council shall review the reports prepared by the Committee and certify the district's plans. The review may occur in conjunction with any update of the Facilities and Services chapter of the King County Comprehensive Plan proposed by the Committee.

B. The council shall review and consider any proposal(s) submitted by the Committee for amending the land use policies of the King County Comprehensive Plan, or the development regulations implementing the plan, including but not limited to requiring mandatory phasing of plats, UPDs or multifamily development when the Committee is unable to recommend a certification of concurrency in a specific school district. Any proposed amendments to the comprehensive plan or development regulations shall be subject to the public hearing and other procedural requirements set out in Title 20 or 21A, as applicable.

C. The council may require the Committee to submit proposed amendments or may itself initiate amendments to the land use policies of the King County Comprehensive Plan, or amendments to the development regulations implementing the plan. (Ord. 11621 § 91, 1994).

21A.28.160 School concurrency standard.

A. Schools shall be considered to have been provided concurrently with the development which will impact the schools if:

1. The permanent and interim improvements necessary to serve the development are planned to be in place at the time the impacts of development are expected to occur; or

2. The necessary financial commitments are in place to assure the completion of the needed improvements to meet the district's standard of service within 3 years of the time that the impacts of development are expected to occur. Necessary improvements are those facilities identified by the district in its capital facilities plan as reviewed and adopted by King County.

B. Any combination of the following shall constitute the "necessary financial commitments" for the purposes of subsection A.

1. The district has received voter approval of and/or has bonding authority;

2. The district has received approval for federal, state, or other funds;

3. The district has received a secured commitment from a developer that the developer will construct the needed permanent school facility, and the school district has found such facility to be acceptable and consistent with its capital facilities plan; and/or

4. The district has other assured funding, including but not limited to school impact fees which have been paid.

C. Compliance with this concurrency requirement of this section shall be sufficient to satisfy the provisions of RCW 58.17.060 and RCW 58.17.110. (Ord. 10870 § 526, 1993).

21A.28.180 Credit for improvements. Whenever a development is granted approval subject to a condition that the development proponent actually provide a school facility acceptable to the district, the development proponent shall be entitled to a credit for the actual cost of providing the facility, against the fee that would be chargeable under the formula provided by K.C.C. Title 27. The cost of construction shall be estimated at the time of approval, but must be documented and the documentation confirmed after the construction is completed to assure that an accurate credit amount is provided. If construction costs are less than the calculated fee amount, the difference remaining shall be chargeable as a school impact fee. (Ord. 10870 § 528, 1993).

21A.30 DEVELOPMENT STANDARDS - ANIMALS, HOME OCCUPATION, HOME INDUSTRY

Sections:

21A.30.010 Purpose.
21A.30.020 Animal regulations - small animals.
21A.30.030 Animal regulations - livestock - purpose.
21A.30.040 Animal regulations -- livestock - densities.
21A.30.045 Animal regulations — livestock management components of farm management plans.
21A.30.060 Animal regulations - livestock - management standards.
21A.30.062 Animal regulations - livestock - building requirements.

21A.30.064 Animal regulations - livestock - livestock regulation implementation and monitoring - agriculture commission livestock committee.
21A.30.066 Animal regulations - livestock - education and enforcement.
21A.30.067 Livestock management - information.
21A.30.068 Livestock management - waste disposal.
21A.30.075 Livestock interdisciplinary teams.
21A.30.080 Home occupation in the R and UR zones.
21A.30.085 Home occupations in the A, F and RA zones.
21A.30.090 Home industry.

21A.30.010 Purpose. The purpose of this chapter is to enhance and preserve the compatibility between neighboring properties by regulating the scope and intensity of accessory uses or activities. (Ord. 10870 § 529, 1993).

21A.30.020 Animal regulations - small animals. The raising, keeping, breeding or boarding of small animals are subject to K.C.C. chapter 11.04, King County Board of Health Code chapter 8.03 and the following requirements:

A.1. Small animals that are kept as household pets in a dwelling unit in aquariums, terrariums, cages or similar containers shall not be limited in number, except as otherwise provided in King County Board of Health Code chapter 8.03 or K.C.C. Title 11.

2. Except as otherwise allowed for a facility licensed under King County Board of Health Code chapter 8.03 or K.C.C. chapter 11.04, other small animals, excluding altered cats, kept as household pets in a dwelling unit shall be limited to five.

3. Altered cats kept as household pets in a dwelling unit shall not be limited in numbers.

B.1. Except as otherwise provided in subsection E. of this section, the number of small animals kept outside a dwelling unit shall be limited as follows:

a. on sites of less than twenty thousand square feet, three per dwelling unit;

b. on sites of between twenty thousand and thirty-five thousand square feet, five per dwelling unit; and

c. on sites greater than thirty-five thousand square feet, one additional small animal per dwelling unit for each one-half acre of site area over thirty-five thousand square feet up to a maximum of twenty.

2. Unaltered animals kept outdoors must be kept on a leash or in a confined area, except as otherwise allowed under K.C.C. chapter 11.04 for a hobby kennel, hobby cattery or under King County Board of Health Code chapter 8.03 for a commercial kennel or commercial cattery.

C. Unless otherwise allowed for a facility licensed under King County Board of Health Code chapter 8.03 or K.C.C. chapter 11.04, the total number of unaltered adult cats and dogs per dwelling unit shall not exceed three.

D. Small animals considered to be household pets shall be treated as other small animals under subsection E. of this section when they are kept for breeding, boarding or training.

E. Small animals kept outside the dwelling unit for breeding, boarding or training as an accessory use of a resident the dwelling unit are allowed, subject to the following limitations:

1. Birds shall be kept in an aviary or loft that meets the following standards:

a. The aviary or loft shall provide one-half square foot for each parakeet, canary or similarly sized birds, one square foot for each pigeon, small parrot or similarly sized bird and two square feet for each large parrot, macaw or similarly sized bird;

b. Aviaries or lofts shall not exceed two thousand square feet, provided this limit shall not apply in rural, forestry or agricultural zones; and

c. The aviary is set back at least ten feet from any property line, and twenty feet from any dwelling unit.

2. Small animals other than birds shall be kept according to the following standards:

a. The minimum site area shall be one-half acre if more than three small animals are being kept;

b. All animals shall be confined within a building, pen, aviary or similar structure;

c. Any covered structure used to house or contain such animals shall maintain a distance of not less than ten feet to any property line, except structures used to house mink and fox shall be a distance of not less than one hundred fifty feet.

d. Poultry, chicken, squab, and rabbits are limited to a maximum of one animal per one square foot of structure used to house such animals, up to a maximum of two thousand square feet. This maximum structure size limit shall not apply in rural area, forestry, or agricultural zones;

e. Hamsters, nutria and chinchilla are limited to a maximum of one animal per square foot of structure used to house such animals, up to a maximum of two thousand square feet;. This maximum structure size limit shall not apply in rural, forestry or agricultural zones

f. Mink and fox are permitted only on sites having a minimum area of five acres.

g. Beekeeping is limited as follows:

(1) Beehives are limited to fifty on sites less than five acres;

(2) The number of beehives shall not be limited on sites of five acres or greater;

(3) Colonies shall be maintained in movable-frame hives at all times;

(4) Adequate space shall be provided in each hive to prevent overcrowding and swarming;

(5) Colonies shall be requeened following any swarming or aggressive behavior;

(6) All colonies shall be registered with the county extension agent before April 1 of each year, on a state registration form acceptable to the county; and

(7) Abandoned colonies, diseased bees, or bees living in trees, buildings, or any other space except in movable-frame hives shall constitute a public nuisance, and shall be abated as set forth in K.C.C. chapter 21A.50;

3. Hobby kennels and hobby catteries are subject to the following requirements:

a. For hobby kennels located on resource rural area or residential zoned sites:

(1) The minimum site area shall be five acres; and

(2) Structures housing animals and outdoor animal runs shall be a minimum distance of one hundred feet from property lines abutting the resource, rural area or residential zones;

b. For hobby kennels located on nonresidential zoned sites, run areas shall be completely surrounded by an eight foot solid wall or fence, and be subject to the requirements in K.C.C. 11.04.060; and

c. Hobby catteries shall be on sites of thirty-five thousand square feet or more, and buildings used to house cats shall be a minimum distance of fifty feet from property lines abutting the rural area zone or residential zones.

F. Commercial kennels and commercial catteries are subject to the following requirements:

1. For commercial kennels located on resource, rural area, or residential zoned sites:

a. The minimum site area shall be five acres; and

b. Structures housing animals and outdoor animal runs shall be a minimum distance of one hundred feet from property lines abutting the resource, rural area or residential zones;

2. For commercial kennels located on nonresidential zoned sites, run areas shall be completely surrounded by an eight foot solid wall or fence, and be subject to the requirements in King County Board of Health Code chapter 8.03; and

3. Commercial catteries shall be on sites of thirty-five thousand square feet or more, and buildings used to house cats shall be a minimum distance of fifty feet from property lines abutting the rural area or residential zones. (Ord. 17841 § 48, 2014: Ord. 17539 § 59, 2013: Ord. 14429 § 5, 2002: Ord. 11157 § 27, 1993: Ord. 10870 § 530, 1993).

21A.30.030 Animal regulations - livestock - purpose. The primary purpose of sections 21A.30.040 - .075 is to support the raising and keeping of livestock in the county in a manner that minimizes the adverse impacts of livestock on the environment particularly with regard to their impacts on water quality and salmonid fisheries habitat in King County watersheds. Maintaining and enhancing the viability of fisheries, livestock-raising and farming are essential to the long-term economic vitality, recreation opportunities and quality of life in rural and resource lands of King County. The following sections establish regulations which set livestock densities and require implementation of best management practices for minimizing non-point pollution from livestock in a manner that recognizes the need for integrated resource management within King County watersheds. They are intended to be consistent with livestock welfare; however, these concerns are more appropriately addressed through K.C.C. 11.04. (Ord. 11168 § 1, 1993).

21A.30.040 Animal regulations — livestock — densities. The raising, keeping, breeding or fee boarding of livestock are subject to K.C.C. chapter 11.04, Animal Control Regulations, and the following requirements:

A. The minimum lot size on which large livestock may be kept shall be 20,000 square feet, provided that the amount of site area available for use by the livestock may be less than 20,000 square feet and provided further that the portion of the total lot area used for confinement or grazing meets the requirements of this section.

B.1. The maximum number of livestock shall be as follows:

a. Commercial dairy farms shall meet the requirements of chapter 90.64 RCW or a livestock management component of a farm management plan adopted in accordance with K.C.C. 21A.30.045;

b. Six resident animal units per gross acre in stables, barns and other livestock operations with covered confinement areas, if no more than three animal units per gross acre are allowed to use uncovered grazing or confinement areas on a full time basis, and the standards in K.C.C. 21A.30.060 are met or a livestock management component of a farm management plan is implemented and maintained in accordance with K.C.C. 21A.30.045. Higher densities may be allowed subject to the conditional use permit process to confirm compliance with the management standards. The conditional use permit process is not required for existing operations that operate with higher densities, in accordance with K.C.C. 21A.30.060 or a livestock management component of a farm management plan is implemented for those operations;

c. Three animal units per gross acre of vegetated site area, if the standards in K.C.C. 21A.30.060 are met or livestock management component of a farm management plan is implemented and maintained in accordance with K.C.C. 21A.30.045; and

d. One animal unit per two acres of vegetated area, not to exceed a total of five animal units, if the standards for storage and handling of manure in K.C.C. 21A.30.060.D. are met.

2. For purposes of this section, an animal unit consists of one adult horse or bovine, two ponies, five small livestock or equivalent thereof excluding sucklings. Miniature horses and feeder calves up to one year of age are considered small livestock. (Ord. 15051 § 213, 2004: Ord. 11168 § 2, 1993: Ord. 11157 § 28, 1993: Ord. 10870 § 532, 1993).

21A.30.045 Animal regulations — livestock management components of farm management plans.

A. To achieve the maximum density allowances using a livestock management component of a farm management plan, the plan must meet the following criteria:

1. The plan is developed as part of a program authorized or approved by King County. Certified Washington state Department of Ecology nutrient management plans that are consistent with all of the criteria of this section may substitute for a livestock management component of a farm management plan for commercial dairy farms. Commercial dairy farms that do not have approved nutrient management plans must meet the requirements of K.C.C 21A.30.060;

2. The plan includes site-specific management measures for minimizing nonpoint pollution from agricultural activities and for managing wetland and aquatic areas including, but not limited to:

a. livestock watering;

b. grazing and pasture management;

c. confinement area management

d. manure management; and

e. exclusion of animals from aquatic areas and their buffers and wetlands and their buffers with the exception of grazed wet meadows.

3. The plan is implemented within a timeframe established in the plan and maintained so that nonpoint pollution attributable to livestock-keeping is minimized; and

4. A monitoring plan may be required as part of the livestock management component of a farm management plan to demonstrate that there is no significant impact to water quality and salmonid fisheries habitat. Monitoring results shall be available to the King County agriculture program.

B. The livestock management component of a farm management plan shall, at a minimum:

1. Generally seek to achieve a twenty-five-foot buffer of diverse, mature vegetation between grazing areas and the ordinary high water mark of all type S and F aquatic areas and the wetland edge of any category I, II or III wetland with the exception of grazed wet meadows, using buffer averaging where necessary to accommodate existing structures. The livestock management component of a farm management plans may vary the width of the buffer of an aquatic area or wetland, and the time and duration of animal exclusion throughout the year, according to guidelines agreed upon by King County and the King Conservation District. The guidelines may support a different buffer width based on both the nature of the farm operation and the function and sensitivity of the aquatic area or wetland. The plan must include best management practices that avoid having manure accumulate in or within ten feet of type N or O waters. Forested lands being cleared for grazing areas shall comply with the critical area buffers in K.C.C. chapter 21A.24;

2. Assure that drainage ditches on the site do not channel animal waste to aquatic areas and wetlands;

3. Achieve an additional twenty-foot buffer downslope of any confinement areas within two hundred feet of type S and F waters. This requirement may be waived for existing confinement areas on lots of two and one-half acres or less in size if:

a. a minimum buffer of twenty-five feet of diverse, mature vegetation is achieved;

b. manure within the confinement area is removed daily during the winter season from October 15 to April 15, and stored in accordance with K.C.C. 21A.30.060.D; and

c. additional best management practices, as recommended by the King Conservation District, are implemented and maintained; and

4. Include a schedule for implementation.

C. Any deviation from the manure management standards must be addressed in a livestock management component of a farm management plan.

D. A copy of the final plans shall be submitted to the department of natural resources and parks within sixty days of completion.

E. The completed farm management plan may be appealed to the hearing examiner in accordance with K.C.C. 20.24.080. The appeal must be filed within thirty days of submitting the farm management plan [with the] department of natural resources and parks under subsection D. of this section. Appeals may be filed only by the property owner or four members of the King County agriculture commission. Any farm management plan not appealed shall constitute prima facie evidence of compliance with the regulatory provisions of K.C.C. 9.12.035. (Ord. 15051 § 214, 2004: Ord. 14199 § 235, 2001: Ord. 11168 § 3, 1993).

21A.30.060 Animal regulations — livestock management standards. Property owners with farms containing either large livestock at densities greater than one animal unit per two acres, or small livestock at densities greater than five animals per acre, or both, are not required to follow an livestock management plan if the owners adhere to the management standards in subsections A. through G. of this section. This section applies only if farm practices do not result in violation of any federal, state or local water quality standards.

A. To minimize livestock access to aquatic areas, property owners shall utilize the following livestock watering options:

1. The preferred option, which is a domestic water supply, stock watering pond, roof runoff collection system, or approved pumped supply from the aquatic areas so that livestock are not required to enter aquatic areas for their water supply.

2. Livestock access to type S and F waters, including their buffers shall be limited to crossing and watering points that have been addressed by a crossing or watering point plan designed to Natural Resource Conservation Services or King Conservation District specifications that prevent free access along the length of the aquatic areas.

a. Fencing shall be used as necessary to prevent livestock access to type S and F waters.

b. Bridges may be used, in accordance with K.C.C. chapter 21A.24, in lieu of crossings. Piers and abutments shall not be placed within the ordinary high water mark or top-of-bank, whichever is greater. Bridges shall be designed to allow free flow of flood waters and shall not diminish flood carrying capacity. These bridges may be placed without a county building permit, but the permit waiver shall not constitute any assumption of liability by the county with regard to such bridge or its placement. The

waiver of county building permit requirements does not constitute a waiver from other required agency permits.

B. Existing grazing areas not addressed by K.C.C. chapter 21A.24 shall maintain a vegetative buffer of fifty feet from the wetland edge of a category I, II or III wetland, except those wetlands meeting the definition of grazed wet meadows, or the ordinary high water mark of a type S or F water.

2. Forested lands being cleared for grazing areas shall comply with critical area buffers in K.C.C. chapter 21A.24.

3. The grazing area buffer may be reduced to twenty-five feet where a twenty-five-foot buffer of diverse, mature vegetation already exists. This buffer reduction may not be used when forested lands are being cleared for grazing areas.

4. Fencing shall be used to establish and maintain the buffer unless the buffer is otherwise impenetrable to livestock.

5. Fencing installed in accordance with the 1990 Sensitive Area Ordinance before February 14, 1994, at setbacks other than those specified in subsection B.1. and 2. of this section shall be deemed to constitute compliance with those requirements.

6. Grazing areas within two hundred feet of a type S or F water or category I, II or III wetland shall not be plowed during the rainy season from October 1 through April 30.

7. Grazing areas may extend to the property line, provided that type S or F waters and category I, II and III wetlands adjacent to the property line are buffered in accordance with subsection B.1., 2. or 3. of this section.

C.1. In addition to the buffers in subsection B.1. and 2. of this section, confinement areas located within two hundred feet of any type S or F waters or category I, II or III, wetlands with the exception of grazed wet meadows shall:

a. have a twenty-foot-wide vegetative filter strip downhill from the confinement area, consisting of heavy grasses or other ground cover with high stem density and that may also include tree cover;

b. not be located in the buffer of any type S or F water or any wetland buffer required by the critical areas ordinance in effect at the time the confinement area is built, or within fifty feet of the wetland edge of any category I, II or III wetland or the ordinary high water mark of any type S or F water. Fencing shall be used to establish and maintain the buffer except where existing natural vegetation is sufficient to exclude livestock from the buffer. Existing confinement areas that do not meet these requirements shall be modified as necessary to provide the buffers specified in this section within five years of January 1, 2005, though the footprint of existing buildings need not be so modified; and

c. have roof drains of any buildings in the confinement area diverted away from the confinement area.

2. Confinement areas may extend to the property line, if aquatic areas and wetlands adjacent to the property line are buffered in accordance with K.C.C. this subsection C. of this section.

D.1. Manure storage areas shall be managed as follows:

a. Surface flows and roof runoff shall be diverted away from manure storage areas;

b. All manure stockpiled within two hundred feet uphill of any the ordinary high water mark of a type S or F water or the edge of a category I, II or III wetland shall either be covered in a manner that excludes precipitation and allows free flow of air to minimize fire danger or be placed in an uncovered concrete bunker or manure lagoon or held for pickup in a dumpster, vehicle or other facility designed to prevent leachate from reaching any aquatic area or wetland. Concrete bunkers shall be monitored quarterly for the first two years after installation, then annually unless problems were

identified in the first two years, in which case quarterly monitoring shall continue and appropriate adjustments shall be made;

c. Manure shall not be stored in any aquatic area buffer or wetland buffer, with the exception of grazed or tilled wet meadows unless there is no other alternative on the property. Manure shall be stored in a location that avoids having runoff from the manure enter aquatic areas or wetlands. Manure piles shall not be closer than one hundred feet uphill from:

(1) any wetland edge excluding grazed or tilled wet meadows;

(2) the ordinary high water mark of any aquatic area; or

(3) any ditch to which the topography would generally direct runoff from the manure; and

d. The location may be reduced to no closer than fifty feet if the manure pile is part of an active compost system that is located on an impervious surface to prevent contact with the soil and includes a leachate containment system.

2. Manure shall be spread on fields only during the growing season, and not on saturated or frozen fields.

E. For purposes of this section, "buffer maintenance" means allowing vegetation in the buffer that provides shade for the aquatic area or acts as a filter for storm water entering the aquatic area, other than noxious weeds, to grow to its mature height, though grasses in the buffer may be mowed but not grazed. Grading in the buffer is allowed only for establishment of watering and crossing points, or for other activities permitted in accordance with K.C.C. chapter 21A.24, with the appropriate permits.

F. Properties that have existing fencing already installed at distances other than those specified in these standards, and for which livestock management farm plans have been developed based on the existing fencing locations, shall be deemed to be in compliance with the fencing requirements of these standards. Properties with or without a livestock management component of a farm management plan that complied with the fencing requirements in effect before January 1, 2005, shall have five years from January 1, 2005, to meet the fencing requirements for aquatic areas that were exempt from fencing under ordinances in effect before January 1, 2005.

G. Buffer areas shall not be subject to public access, use or dedication by reason of the establishment of such buffers. (Ord. 15051 § 215, 2004: Ord. 12786 § 4, 1997: Ord. 11168 § 4, 1993: Ord. 10870 § 534, 1993).

21A.30.062 Animal regulations - livestock - building requirements.

A. In the rural area and residential zones, fee boarding of livestock other than in a legally established stable shall only be as an accessory use to a resident on the subject property.

B. A barn or stable may contain a caretaker's accessory living quarters under the following conditions:

1. Only one accessory living quarter per primary detached dwelling unit, except in the F zone, where accessory living quarters are not permitted;

2. The accessory living quarter shall not exceed five hundred square feet, and

3. The structure must be constructed in conformance with the State Building Code; and

C. A barn or stable may contain a caretaker’s accessory dwelling unit as allowed pursuant to this provisions of this Title relating to accessory dwelling units. (Ord. 17539 § 60, 2013: Ord. 14045 § 55, 2001: Ord. 12786 § 5, 1997: Ord. 11168 § 5, 1993).

21A.30.064 Animal regulations - livestock - livestock regulation implementation and monitoring - agriculture commission livestock committee.

A. In order to evaluate the effectiveness of county livestock regulations, the King County agriculture commission shall appoint an Agriculture Commission Livestock Committee to evaluate emerging livestock husbandry issues to recommend appropriate policies, regulations and support programs.

B. The King County agriculture commission shall:

1. Evaluate the effectiveness of farm management plans and management standards, including but not limited to the need for implementation assistance funding, education and monitoring, as provided
for in this section;

2. Review the recommendations of the livestock committee and the livestock interdisciplinary team when formulating proposals to ensure that goals of this legislation are being met;

3. Provide a link between government experts and the livestock owners who must implement this legislation;

4. Certify the use of experts to prepare farm management plans, if a property owner chooses not to work with the King Conservation District; and

5. Provide recommendations and guidance as necessary to the King County agriculture commission on livestock issues in regards to duties assigned to the Agriculture Commission.

C. The livestock committee may make recommendations to the King County agriculture commission regarding the need for additional funding mechanisms to support implementation of livestock management practices, and livestock waste management solutions.

D. King County shall utilize as high a percentage of any funds available as possible to provide cost-sharing assistance to farmers in implementation of farm management plans (per K.C.C. 21A.30.050). Assistance to farmers should be allocated to encourage early implementation, by providing greater support to farmers who participate in the first years of the program, and less support in the out years. If follow-up monitoring or a complaint indicates that enforcement procedures are required, and it is determined that farm management plans have not been implemented, funding will be withdrawn and repayment required.

E. Monitoring is a critical element in the evaluation of the effectiveness of farm management practices in minimizing non-point pollution in streams and wetlands. As such, the department of natural resources and parks shall develop and implement a management practice monitoring strategy to identify emerging trends and implementation issues.

F. King County shall utilize a percentage of any funds raised by one of the mechanisms developed pursuant to this section to monitor farm management plans and management standards, to provide information regarding the efficacy of the management measures being implemented. This information shall be used to demonstrate the value of such plans to other farmers, and shall be reported to the King County agriculture commission, for use in development of improved standards for the livestock density legislation. (Ord. 14199 § 236, 2001: Ord. 11168 § 6-8, 1993).

21A.30.066 Animal regulations - livestock - education and enforcement.

A. Education. Enforcement of these livestock standards shall initially emphasize achieving compliance with the standards as the primary objective, rather than the collection of fines or penalties. Fines or penalties are appropriate when a property owner or livestock operator has been advised of necessary corrective actions, and has not made those corrections. Where violations of the standards do occur, and such violations are directly linked to identified hazards or the discharge of prohibited contaminants, as

enumerated in K.C.C. 9.12.025, code enforcement must emphasize immediate correction of the practices resulting in the hazard or prohibited discharge.

B. Both the property owner and any renter or lessee of the property, hereinafter referred to "livestock operator," shall be held responsible for compliance with these standards.

C. Prima facie evidence. Establishment and adherence to a farm management plan as allowed by K.C.C. 21A.30.050 or the management standards provided by K.C.C. 21A.30.060 shall be prima facie proof of compliance with the regulatory provisions of K.C.C. 9.12.035.

D. Violations of specific standards. The department of permitting and environmental review shall be responsible for enforcement of the standards set out in this chapter. The surface water management division shall be responsible for enforcement of water quality violations pursuant to K.C.C. Chapter 9.12 for prohibited discharges and hazards. If a specific standard identified in this chapter is not being adhered to, the operator and owner shall be given notice of non-compliance. The notice shall specify what actions must be taken to bring the property into compliance. The operator and owner shall be given 45 days in which to adhere to the management standards of K.C.C. 21A.30.060, or establish a farm management plan pursuant to K.C.C. 21A.30.050 as the owner and/or livestock operator may elect for the purpose of compliance. Should the owner and/or livestock operator fail to bring the property into compliance with the standards, the county, after notice, may commence abatement proceedings and impose civil fines 30 days thereafter, to the extent necessary for compliance. Thereafter, upon exhaustion of any appeals, failure of the operator and owner to comply with any continuing order to abate, the operator and owner shall be subject to civil and criminal penalties, and other procedures, as set forth in this title and K.C.C. Title 23 Enforcement. (Ord. 17420 § 110, 2012: Ord. 11168 § 9, 1993).

21A.30.067 Livestock management - Information. Within 180 days of adoption of Ordinance 11168, King County shall publish and distribute information packets to all affected property owners, describing the ordinance in detail. In particular, the information packets shall outline what will be expected of King County residents who maintain livestock, including timelines, funding sources, and phone numbers and addresses of resource agencies. (Ord. 11168 § 10, 1993).

21A.30.068 Livestock management - waste disposal. Within 180 days of adoption of Ordinance 11168, the solid waste division shall develop a pilot program to investigate potential markets for livestock waste from both commercial and non-commercial operations including, but not limited to, as a replacement to chemical fertilizers in King County parks (flowerbeds and fields); for use in commercial silviculture and nursery operations; for use on private property (similar to Woodland Park Zoo's "Zoodoo" program); and for use in publicly or privately operated composting stations. (Ord. 11168 § 11, 1993).

21A.30.075 Livestock interdisciplinary team. In order to ensure that livestock standards and management plans are customized as much as possible to the stream conditions in each of the various streams, the King County agriculture commission will, in cooperation with the Washington State Department of Fisheries and the Muckleshoot Indian Tribe, the Snoqualmie Indian Tribe, and other affected Indian tribes, establish a livestock interdisciplinary team consisting of three members, with expertise in fisheries, water quality and animal husbandry, to make specific recommendations to the Conservation District and livestock owners adjacent to the streams with regard to buffer needs throughout the parts of each stream which have livestock operations adjoining

such streams. The team shall take into account the recommendations of the adopted Basin Plans and WRIA recommendations, and shall work with the department of natural resources and parks to develop the recommendations. The findings of the interdisciplinary team shall be reported to the King County agriculture commission, which shall assist in the dissemination of the recommendations to owners in the basin. The team shall work initially on those stream systems in which specific problems have been identified and are believed to be livestock related: (Ord. 14199 § 237, 2001: Ord. 11168 § 14, 1993).

21A.30.080 Home occupation in the R and UR zones. In the R, UR, NB, CB and RB zones, residents of a dwelling unit may conduct one or more home occupations as accessory activities, only if:

A. The total floor area of the dwelling unit devoted to all home occupations shall not exceed twenty percent of the floor area of the dwelling unit.

B. Areas within garages and storage buildings shall not be considered part of the dwelling unit and may be used for activities associated with the home occupation;

C. All the activities of the home occupation or occupations shall be conducted indoors, except for those related to growing or storing of plants used by the home occupation or occupations;

D. A home occupation or occupations is not limited in the number of employees that remain off-site. No more than one nonresident employee shall be permitted to work on-site for the home occupation or occupations;

E. The following uses, by the nature of their operation or investment, tend to increase beyond the limits permitted for home occupations. Therefore, the following shall not be permitted as home occupations:

1. Automobile, truck and heavy equipment repair;
2. Autobody work or painting;
3. Parking and storage of heavy equipment;
4. Storage of building materials for use on other properties;
5. Hotels, motels or organizational lodging;
6. Dry cleaning;
7. Towing services;
8. Trucking, storage or self service, except for parking or storage of one commercial vehicle used in home occupation; and
9. Veterinary clinic; and
10. Recreational marijuana processor, recreational marijuana producer or recreational marijuana retailer;

F. In addition to required parking for the dwelling unit, on-site parking is provided as follows:

1. One stall for each nonresident employed by the home occupations; and
2. One stall for patrons when services are rendered on-site;

G. Sales are limited to:

1. Mail order sales;
2. Telephone, Internet or other electronic commerce sales with off-site delivery; and
3. Items accessory to a service provided to patrons who receive services on the premises;

H. On-site services to patrons are arranged by appointment;

I. The home occupation or occupations use or store a vehicle for pickup of materials used by the home occupation or occupations or the distribution of products from the site, only if:

1. No more than one such a vehicle is allowed; and

2. The vehicle is not stored within any required setback areas of the lot or on adjacent streets; and

3. The vehicle does not exceed an equivalent licensed gross vehicle weight of one ton;

J. The home occupation or occupations do not:

1. Use electrical or mechanical equipment that results in a change to the occupancy type of the structure or structures used for the home occupation or occupations; or

2. Cause visual or audible interference in radio or television receivers, or electronic equipment located off-premises or fluctuations in line voltage off-premises; and

K. There shall be no exterior evidence of a home occupation, other than growing or storing of plants under subsection C. of this section or a permitted sign, that would cause the premises to differ from its residential character. Exterior evidence includes, but is not limited to, lighting, the generation or emission of noise, fumes or vibrations as determined by using normal senses from any lot line or on average increase vehicular traffic by more than four additional vehicles at any given time;

L. Customer visits and deliveries shall be limited to the hours of 8:00 a.m. to 7:00 p.m. on weekdays, and 9:00 a.m. to 5:00 p.m. on weekends; and

M. Uses not allowed as home occupations may be allowed as a home industry under K.C.C. 21A.30.090. (Ord. 17710 § 10, 2013: Ord. 17191 § 47, 2011: Ord. 15606 § 19, 2006: Ord. 15032 § 37, 2004: Ord. 11621 § 93, 1994: Ord. 10870 § 536, 1993).

21A.30.085 Home occupations in the A, F and RA zones. In the A, F and RA zones, residents of a dwelling unit may conduct one or more home occupations as accessory activities, under the following provisions:

A. The total floor area of the dwelling unit devoted to all home occupations shall not exceed twenty percent of the dwelling unit.

B. Areas within garages and storage buildings shall not be considered part of the dwelling unit and may be used for activities associated with the home occupation;

C. Total outdoor area of all home occupations shall be permitted as follows:

1. For any lot less than one acre: Four hundred forty square feet; and

2. For lots one acre or greater: One percent of the area of the lot, up to a maximum of five thousand square feet.

D. Outdoor storage areas and parking areas related to home occupations shall be:

1. No less than twenty-five feet from any property line; and

2. Screened along the portions of such areas that can be seen from an adjacent parcel or roadway by the:

a. planting of Type II landscape buffering; or

b. use of existing vegetation that meets or can be augmented with additional plantings to meet the intent of Type II landscaping.

E. A home occupation or occupations is not limited in the number of employees that remain off-site. Regardless of the number of home occupations, the number of nonresident employees is limited to no more than three who work on-site at the same time and no more than three who report to the site but primarily provide services off-site.

F. In addition to required parking for the dwelling unit, on-site parking is provided as follows:

1. One stall for each nonresident employed on-site; and

2. One stall for patrons when services are rendered on-site;

G. Sales are limited to:

1. Mail order sales;

2. Telephone, Internet or other electronic commerce sales with off-site delivery;

3. Items accessory to a service provided to patrons who receive services on the premises;

4. Items grown, produced or fabricated on-site; and

5. On sites five acres or larger, items that support agriculture, equestrian or forestry uses except for the following:

a. motor vehicles and parts (North American Industrial Classification System ("NAICS" Code 441);

b. electronics and appliances (NAICS Code 443); and

c. building material and garden equipments and supplies (NAICS Code 444);

H. The home occupation or occupations do not:

1. Use electrical or mechanical equipment that results in a change to the occupancy type of the structure or structures used for the home occupation or occupations;

2. Cause visual or audible interference in radio or television receivers, or electronic equipment located off-premises or fluctuations in line voltage off-premises; or

3. Increase average vehicular traffic by more than four additional vehicles at any given time;

I. Customer visits and deliveries shall be limited to the hours of 8:00 a.m. to 7:00 p.m. on weekdays, and 9:00 a.m. to 5:00 p.m. on weekends;

J. The following uses, by the nature of their operation or investment, tend to increase beyond the limits permitted for home occupations. Therefore, the following shall not be permitted as home occupations:

1. Hotels, motels or organizational lodging;

2. Dry cleaning:

3. Automotive towing services, automotive wrecking services and tow-in parking lots; and

4. Recreational marijuana processor, recreational marijuana producer or recreational marijuana retailer.

K. Uses not allowed as home occupation may be allowed as a home industry under K.C.C. chapter 21A.30; and

L. The home occupation or occupations may use or store vehicles, as follows:

1. The total number of vehicles for all home occupations shall be:

a. for any lot five acres or less: two;

b. for lots greater than five acres: three; and

c. for lots greater than ten acres: four;

2. The vehicles are not stored within any required setback areas of the lot or on adjacent streets; and

3. The parking area for the vehicles shall not be considered part of the outdoor storage area provided for in subsection C. of this section. (Ord. 17710 § 11, 2013: Ord. 17539 § 61, 2013: Ord. 17191 § 48, 2011: Ord. 16323 § 2, 2008: 15606 § 20, 2006).

21A.30.090 Home industry. A resident may establish a home industry as an accessory activity, as follows:

A. The site area is one acre or greater;

B. The area of the dwelling unit used for the home industry does not exceed fifty percent of the floor area of the dwelling unit.

C. Areas within attached garages and storage buildings shall not be considered part of the dwelling unit for purposes of calculating allowable home industry area but may be used for storage of goods associated with the home industry;

D. No more than six nonresidents who work on-site at the time;

E. In addition to required parking for the dwelling unit, on-site parking is provided as follows:

1. One stall for each nonresident employee of the home industry; and
2. One stall for customer parking;

F. Additional customer parking shall be calculated for areas devoted to the home industry at the rate of one stall per:

1. One thousand square feet of building floor area; and
2. Two thousand square feet of outdoor work or storage area;

G. Sales are limited to items produced on-site, except for items collected, traded and occasionally sold by hobbyists, such as coins, stamps, and antiques;

H. Ten feet of Type I landscaping are provided around portions of parking and outside storage areas that are otherwise visible from adjacent properties or public rights-of-way;

I. The department ensures compatibility of the home industry by:

1. Limiting the type and size of equipment used by the home industry to those that are compatible with the surrounding neighborhood;
2. Providing for setbacks or screening as needed to protect adjacent residential properties;
3. Specifying hours of operation;
4. Determining acceptable levels of outdoor lighting; and
5. Requiring sound level tests for activities determined to produce sound levels that may be in excess of those in K.C.C. chapter 12.88; and

J. Recreational marijuana processors, recreational marijuana producers and recreational marijuana retailers shall not be allowed as home industry. (Ord. 17710 § 12, 2013: Ord. 17191 § 49, 2011: Ord. 15606 § 21, 2006: Ord. 10870 § 537, 1993).

21A.32 GENERAL PROVISIONS - NONCONFORMANCE, TEMPORARY USES, AND RE-USE OF FACILITIES

Sections:

21A.32.010 Purpose.
21A.32.020 Nonconformance - applicability.
21A.32.025 Nonconformance use, structure or improvement - continuation - forfeiture – no reestablishment.
21A.32.040 Nonconformance - abatement of illegal use, structure or development.
21A.32.045 Nonconformance - reestablishment of discontinued nonconforming use, or damaged or destroyed nonconforming structure or site improvement.
21A.32.055 Nonconformance - modifications to nonconforming use, structure or site improvement.
21A.32.065 Nonconformance - expansions of nonconforming uses, structures, or site improvements.
21A.32.075 Nonconformance - required findings.
21A.32.085 Nonconformance - residences.
21A.32.100 Temporary use permits - uses requiring permits.
21A.32.110 Temporary use permits - exemptions to permit requirement.
21A.32.120 Temporary use permits - duration and frequency.
21A.32.130 Temporary use permits - parking.
21A.32.140 Temporary use permits - traffic control.
21A.32.145 Homeless encampments - prohibited. (Effective January 1, 2025, and thereafter.)
21A.32.150 Temporary construction buildings.
21A.32.160 Temporary construction residence.

21A.32.170 Temporary mobile home for medical hardship.
21A.32.180 Temporary real estate offices.
21A.32.190 Temporary school facilities.
21A.32.200 Re-use of facilities - general standards.
21A.32.210 Re-use of facilities - reestablishment of closed public school facilities.
21A.32.220 Re-use of facilities - standards for conversion of historic buildings.
21A.32.230 Public nuisance - prohibited activities.
21A.32.250 Recreational marijuana production and processing facilities – odor management plan.

21A.32.010 Purpose. The purposes of this chapter are to:

A. Establish the legal status of a nonconformance by creating provisions through which a nonconformance may be maintained, altered, reconstructed, expanded or terminated;

B. Provide for the temporary establishment of uses that are not otherwise permitted in a zone and to regulate such uses by their scope and period of use; and

C. Encourage the adaptive re-use of existing public facilities which will continue to serve the community, and to ensure public review of redevelopment plans by allowing:

1. Temporary re-use of closed public school facilities retained in school district ownership, and the reconversion of a temporary re-use back to a school use;

2. Permanent re-use of surplus nonresidential facilities (e.g. schools, fire stations, government facilities) not retained in school district ownership; or

3. Permanent re-use of historic structures listed on the National Register or designated as county landmarks. (Ord. 10870 § 538, 1993).

21A.32.020 Nonconformance - applicability.

A. With the exception of nonconforming extractive operations identified in K.C.C. 21A.22, all nonconformances shall be subject to the provisions of this chapter.

B. This chapter does not supersede or relieve a property owner from compliance with:

1. The International Building and Fire Codes; or

2. The provisions of this code beyond the specific nonconformance addressed by this chapter. (Ord. 17837 § 91, 2014: Ord. 10870 § 539, 1993).

21A.32.025 Nonconformance use, structure or improvement - continuation - forfeiture - no reestablishment. A nonconforming use, structure or improvement may be continued in a manner consistent with this chapter. However, nonconformance status is forfeited if the nonconforming use, structure or improvement is discontinued beyond the provisions of K.C.C. 21A.32.045. Once nonconformance status is forfeited, the nonconforming use, structure or improvement shall not be reestablished. (Ord. 17841 § 49, 2014: Ord. 13130 § 2, 1998).

21A.32.040 Nonconformance - abatement of illegal use, structure or development. Any use, structure or other site improvement not established in compliance with use and development standards in effect at the time of establishment shall be deemed illegal and shall be discontinued or terminated and subject to removal pursuant to the provisions of K.C.C. Title 23. (Ord. 10870 § 541, 1993).

21A.32.045 Nonconformance - reestablishment of discontinued nonconforming use, or damaged or destroyed nonconforming structure or site improvement. A nonconforming use that has been discontinued or a nonconforming

structure or site improvement that has been damaged or destroyed, may be reestablished or reconstructed if:

A. The nonconforming use, structure or site improvement that previously existed is not expanded;

B. A new nonconformance is not created;

C.1. The use has not been discontinued for more than twelve months before its reestablishment, or the nonconforming structure or site improvement is reconstructed in accordance with a complete permit application submitted to the department within twelve months of the occurrence of damage or destruction; or

2. If the use has been discontinued for more than twelve months, the applicant provides documentation that demonstrates to the satisfaction of the department that there was no intent to abandon the use. Documentation may include, but is not limited to, requests for approvals necessary to reestablish the use or structure submitted to appropriate county, state and federal agencies within twelve months after the use was discontinued. A statement from the property owner that merely states that there is no intent to abandon is not sufficient documentation without a showing of additional actions taken by the property owner to reestablish the use or structure; and

D. A nonconforming use, structure or site improvement located within the shoreline jurisdiction that is damaged or destroyed more than fifty percent of its fair market value at present or at the time of its destruction may be reconstructed only insofar as it is consistent with existing regulations. (Ord. 16985 § 111, 2010: Ord. 16594 § 5, 2009: Ord. 13130 § 3, 1998).

21A.32.055 Nonconformance - modifications to nonconforming use, structure or site improvement. Modifications to a nonconforming use, structure or site improvement may be reviewed and approved by the department pursuant to the code compliance review process of K.C.C. 21A.42.030 provided that:

A. The modification does not expand any existing nonconformance; and

B. The modification does not create a new type of nonconformance. (Ord. 15606 § 22, 2006: Ord. 13130 § 4, 1998).

21A.32.065 Nonconformance - expansions of nonconforming uses, structures, or site improvements. A nonconforming use, structure, or site improvement may be expanded as follows:

A. The department may review and approve, pursuant to the code compliance process of K.C.C. 21A.42.030, an expansion of a nonconformance only if:

1. The expansion conforms to all other provisions of this title, except that the extent of the project-wide nonconformance in each of the following may be increased up to ten percent:

a. building square footage,

b. impervious surface,

c. parking, or

d. building height; and

2. No subsequent expansion of the same nonconformance shall be approved under this subsection if the cumulative amount of such expansion exceeds the percentage prescribed in subsection A.1;

B. A special use permit shall be required for expansions of a nonconformance within a development authorized by an existing special use or unclassified use permit if the expansions are not consistent with subsection A. of this section;

C. A conditional use permit shall be required for expansions of a nonconformance:

1. Within a development authorized by an existing planned unit development approval; or

2. Not consistent with the provisions of subsections A. and B. of this section; and

D. No expansion shall be approved that would allow for urban growth outside the urban growth area, in conflict with King County Comprehensive Plan rural and natural resource policies and constitute impermissible urban growth outside an urban growth area. (Ord. 15606 § 23, 2006: Ord. 13130 § 5, 1998).

21A.32.075 Nonconformance - required findings. Modifications or expansions approved by the department shall be based on written findings that the proposed:

Modification or expansion of a nonconformance located within a development governed by an existing conditional use permit, special use permit, unclassified use permit, or planned unit development shall provide the same level of protection for and compatibility with adjacent land uses as the original land use permit approval. (Ord. 13130 § 6, 1998).

21A.32.085 Nonconformance - residences. Any residence nonconforming relative to use may be expanded, after review and approval through the code compliance process in K.C.C. chapter 21A.42, subject to all other applicable codes besides those set forth in this chapter for nonconformances. (Ord. 17841 § 50, 2014: Ord. 13130 § 12, 1998).

21A.32.100 Temporary use permits - uses requiring permits. Except as provided by K.C.C. 21A.32.110, a temporary use permit shall be required for:

A. A use not otherwise permitted in the zone that can be made compatible for a period of up to sixty days a year; or

B. The expansion of an established use that :

1. Is otherwise allowed in the zone;
2. Is not inconsistent with the original land use approval;
3. Exceeds the scope of the original land use approval; and
4. Can be made compatible with the zone for a period of up to sixty days a year. (Ord. 17841 § 51, 2014: Ord. 10870 § 547, 1993).

21A.32.110 Temporary use permits - exemptions to permit requirement.

A. The following uses shall be exempt from requirements for a temporary use permit when located in the RB, CB, NB, O, or I zones for the time period specified below:

1. Uses not to exceed a total of thirty days each calendar year:
   a. Christmas tree lots;
   b. Fireworks stands; and
   c. Produce stands.
2. Uses not to exceed a total of fourteen days each calendar year:
   a. Amusement rides, carnivals, or circuses;
   b. Community festivals; and
   c. Parking lot sales.

B. Any use not exceeding a cumulative total of two days each calendar year shall be exempt from requirements for a temporary use permit.

C. Any community event held in a park and not exceeding a period of seven days shall be exempt from requirements for a temporary use permit.

D. Christmas tree sales not exceeding a total of 30 days each calendar year when located on Rural Area (RA) zoned property with legally established non-residential uses shall be exempt from requirements for a temporary use permit. (Ord. 13022 § 29, 1998: Ord. 12893 § 1, 1997: Ord. 10870 § 548, 1993).

21A.32.120 Temporary use permits - duration and frequency. Except as otherwise provided in this chapter or in K.C.C. chapter 21A.45, temporary use permits shall be limited in duration and frequency as follows:

A. The temporary use permit shall be effective for one year from the date of issuance and may be renewed annually as provided in subsection D. of this section;

B. The temporary use shall not exceed a total of sixty days in any three-hundred and sixty five day period. This requirement applies only to the days that the event or events actually take place. For a winery in the A or RA zones, the temporary use shall not exceed a total of two events per month and all parking for the events must be accommodated on site;

C. The temporary use permit shall specify a date upon which the use shall be terminated and removed; and

D. A temporary use permit may be renewed annually for up to a total of five consecutive years as follows:

1. The applicant shall make a written request and pay the applicable permit extension fees for renewal of the temporary use permit at least seventy days before the end of the permit period;

2. The department must determine that the temporary use is being conducted in compliance with the conditions of the temporary use permit;

3. The department must determine that site conditions have not changed since the original temporary permit was issued; and

4. At least forty-five days before the end of the permit period, the department shall notify property owners within five hundred feet of the property boundaries that a temporary use permit extension has been requested and contact information to request additional information or to provide comments on the proposed extension. (Ord. 17841 § 52, 2014: Ord. 17191 § 50, 2011: Ord. 16950 § 27, 2010: Ord. 15170 § 4, 2005: Ord. 14781 § 3, 2003: Ord. 10870 § 549, 1993).

21A.32.130 Temporary use permits - parking. Parking and access for proposed temporary uses shall be approved by the county. (Ord. 10870 § 550, 1993).

21A.32.140 Temporary use permits - traffic control. The applicant for a proposed temporary use shall provide any parking/traffic control attendants as specified by the King County department of public safety. (Ord. 10870 § 551, 1993).

21A.32.145 Homeless encampments – prohibited. (Effective January 1, 2025, and thereafter). A homeless encampment is a prohibited use and shall not be approved through a temporary use permit. If the King County Ten Year Plan to End Homelessness has not been fully implemented and there is still a need for homeless encampments, the county council may through legislative action extend K.C.C. chapter 21A.45 and Ordinance 15170, Section 16. (Ord. 15170 § 18, 2005).

21A.32.150 Temporary construction buildings. Temporary structures for storage of tools and equipment, or for supervisory offices may be permitted for construction projects, provided that such structures are:

A. Allowed only during periods of active construction; and

B. Removed within 30 days of project completion or cessation of work. (Ord. 10870 § 552, 1993).

21A.32.160 Temporary construction residence.

A. A mobile home may be permitted on a lot as a temporary dwelling for the property owner, provided a building permit for a permanent dwelling on the site has been obtained.

B. The temporary mobile home permit shall be effective for a period of 12 months. The permit may be extended for one additional period of 12 months if the permanent dwelling is constructed with a finished exterior by the end of the initial approval period.

C. The mobile home shall be removed within 90 days of:

1. The expiration of the temporary mobile home permit; or

2. The issuance of a certificate of occupancy for the permanent residence, whichever occurs first. (Ord. 10870 § 553, 1993).

21A.32.170 Temporary mobile home for medical hardship.

A. A mobile home may be permitted as a temporary dwelling on the same lot as a permanent dwelling, provided:

1. The mobile home together with the permanent residence shall meet the setback, height, building footprint, and lot coverage provisions of the applicable zone; and

2. The applicant submits with the permit application a notarized affidavit that contains the following:

a. Certification that the temporary dwelling is necessary to provide daily care, as defined in K.C.C. 21A.06;

b. Certification that the primary provider of such daily care will reside on-site;

c. Certification that the applicant understands the temporary nature of the permit, subject to the limitations outlined in subsections B and C of this section;

d. Certification that the physician's signature is both current and valid; and

e. Certification signed by a physician that a resident of the subject property requires daily care, as defined in K.C.C. 21A.06.

B. Temporary mobile home permits for medical hardships shall be effective for 12 months. Extensions of the temporary mobile home permit may be approved in 12-month increments subject to demonstration of continuing medical hardship in accordance with the procedures and standards set forth in subsection A of this section.

C. The mobile home shall be removed within 90 days of:

1. The expiration of the temporary mobile home permit; or

2. The cessation of provision of daily care. (Ord. 12523 § 4, 1996: Ord. 10870 § 554, 1993).

21A.32.180 Temporary real estate offices. One temporary real estate office may be located on any new residential development, provided that activities are limited to the initial sale or rental of property or units within the development. The office use shall be discontinued within one year of recording of a short subdivision or issuance of a final certificate of occupancy for an apartment development, and within two years of the recording of a formal subdivision. (Ord. 13095 § 1, 1998: Ord. 10870 § 555, 1993).

21A.32.190 Temporary school facilities. Temporary school structures may be permitted during construction of new school facilities or during remodeling of existing facilities, provided that such structures are:

A. Allowed only during periods of active construction or remodeling;

B. Do not expand the student capacity beyond the capacity under construction or remodeling; and

C. Removed within 30 days of project completion or cessation of work. (Ord. 10870 § 556, 1993).

21A.32.200 Re-use of facilities - general standards. The interim or permanent re-use of surplus nonresidential facilities in the rural area and residential zones shall require that no more than fifty percent of the original floor area be demolished for either permanent or interim re-use of facilities. (Ord. 17539 § 62: 2013: Ord. 11621 § 94, 1994: Ord. 10870 § 557, 1993).

21A.32.210 Re-use of facilities - reestablishment of closed public school facilities. The re-establishment or reconversion of an interim nonschool use of school facilities back to school uses shall require a site plan and the issuance of a change of use permit pursuant to K.C.C. 16.04. (Ord. 10870 § 558, 1993).

21A.32.220 Re-use of facilities - standards for conversion of historic buildings. In order to insure that significant features of the property are protected pursuant to K.C.C. 20.62, the following standards shall apply to conversion of historic buildings:

A. Gross floor area of building additions or new buildings required for the conversion shall not exceed 20 percent of the gross floor area of the historic building, unless allowed by the zone;

B. Conversions to apartments shall not exceed one dwelling unit for each 3,600 square feet of lot area, unless allowed by the zone; and

C. Any construction required for the conversion shall require certification of appropriateness from the King County Landmark Commission. (Ord. 10870 § 559, 1993).

21A.32.230 Public nuisance - prohibited activities. It is unlawful for any person to keep, maintain or deposit on any property in the county a public nuisance including, but not limited to, the following:

A. Open storage of rubbish or junk including, but not limited to, refuse, garbage, scrap metal or lumber, concrete, asphalt, tin cans, tires and piles of earth, not including compost bins.

B. Combustible material likely to become easily ignited or debris resulting from any fire and which constitutes a fire hazard, as defined in the International Fire Code as adopted under K.C.C. 17.04.010.

C. Abandoned vehicles, wrecked, dismantled or inoperative vehicles or remnant parts thereof except as provided in K.C.C. 23.10.040. (Ord. 17837 § 92, 2014: Ord. 12024 § 12, 1995).

21A.32.250 Recreational marijuana production and processing facilities – odor management plan. For those recreational marijuana production and processing facilities requiring a conditional use permit under this title, as part of the permit review process, the department may require the applicant to submit an odor management plan for any areas of indoor processing or ventilation of any structure used to produce or process marijuana. The purpose of such plan is to minimize odors and fumes from chemicals or products used in or resulting from either production or processing, or both, of marijuana. (Ord. 17841 § 53, 2014: Ord. 17710 § 14, 2013).

21A.34 GENERAL PROVISIONS - RESIDENTIAL DENSITY INCENTIVES

Section:

21A.34.010 Purpose.
21A.34.020 Permitted locations of residential density incentives.
21A.34.030 Maximum densities permitted through residential density incentive review.
21A.34.040 Public benefits and density incentives.
21A.34.050 Rules for calculating total permitted dwelling units.
21A.34.060 Review process.
21A.34.070 Minor adjustments in final site plans.
21A.34.080 Applicability of development standards.

21A.34.010 Purpose. The purpose of this chapter is to provide density incentives to developers of residential lands in urban areas and rural activity centers, in exchange for public benefits to help achieve Comprehensive Plan goals of affordable housing, open space protection, historic preservation and energy conservation, by:

A. Defining in quantified terms the public benefits that can be used to earn density incentives;

B. Providing rules and formulae for computing density incentives earned by each benefit;

C. Providing a method to realize the development potential of sites containing unique features of size, topography, environmental features or shape; and

D. Providing a review process to allow evaluation of proposed density increases and the public benefits offered to earn them, and to give the public opportunities to review and comment. (Ord. 10870 § 560, 1993).

21A.34.020 Permitted locations of residential density incentives. Residential density incentives (RDI) shall be used only on sites served by public sewers and only in the following zones:

A. In R-4 through R-48 zones; and

B. In NB, CB, RB and O zones when part of a mixed use development. (Ord. 10870 § 561, 1993).

21A.34.030 Maximum densities permitted through residential density incentive review.

A. Except as otherwise provided in subsection B. of this section, the maximum density permitted through residential density incentive ("RDI") review shall be one-hundred fifty percent of the base density of the underlying zone of the development site.

B. The maximum density permitted through RDI review shall be two hundred percent of the base density of the underlying zone of the development site for the following RDI proposals:

1. For proposals where one hundred percent of the units are affordable units; or

2. For cottage housing proposals. (Ord. 15245 § 9, 2005: Ord. 10870 § 562, 1993).

21A.34.040 Public benefits and density incentives.

A. The public benefits eligible to earn increased densities, and the maximum incentive to be earned by each benefit, are in subsection F of this section. The density incentive is expressed as additional bonus dwelling unit, or fractions of dwelling units, earned per amount of public benefit provided.

B. Bonus dwelling units may be earned through any combination of the listed public benefits.

C. The guidelines for affordable housing bonuses including the establishment of rental levels, housing prices and asset limitations, will be updated and adopted annually by the council in the consolidated housing and community development plan.

D. Bonus dwelling units may also be earned and transferred to the project site through the transfer of development rights (TDR) program established in K.C.C. chapter 21A.37, by providing any of the open space, park site or historic preservation public benefits set forth in subsection F.2. or 3. of this section on sites other than that of the RDI development.

E. Residential development in R-4 through R-48 zones with property specific development standards requiring any public benefit enumerated in this chapter, shall be eligible to earn bonus dwelling units in accordance with subsection F of this section if the public benefits provided exceed the basic development standards of this title. If a development is located in a special overlay district, bonus units may be earned if the development provides public benefits exceeding corresponding standards of the special district.

F. The following are the public benefits eligible to earn density incentives through RDI review:

BENEFIT	DENSITY INCENTIVE
1. AFFORDABLE HOUSING	
a. Benefit units consisting of rental housing permanently priced to serve nonsenior citizen low-income households (that is no greater than 30 percent of gross income for households at or below 50 percent of King County median income, adjusted for household size). A covenant on the site that specifies the income level being served, rent levels and requirements for reporting to King County shall be recorded at final approval.	1.5 bonus units per benefit unit, up to a maximum of 30 low-income units per five acres of site area; projects on sites of less than five acres shall be limited to 30 low-income units.
b. Benefit units consisting of rental housing designed and permanently priced to serve low-income senior citizens (that is no greater than 30 percent of gross income for 1- or 2-person households, 1 member of which is 62 years of age or older, with incomes at or below 50 percent of King County median income, adjusted for household size). A covenant on the site that specifies the income level being served, rent levels and requirements for reporting to King County shall be recorded at final approval.	1.5 bonus units per benefit unit, up to a maximum of 60 low-income units per five acres of site area; projects on sites of less than five acres shall be limited to 60 low-income units.
c. Benefit units consisting of senior	1 bonus unit per benefit unit

citizen assisted housing units 600 square feet or less.	
d. Benefit units consisting of moderate income housing reserved for income- and asset-qualified home buyers (total household income at or below 80 percent of King County median, adjusted for household size). Benefit units shall be limited to owner-occupied housing with prices restricted based on typical underwriting ratios and other lending standards, and with no restriction placed on resale. Final approval conditions shall specify requirements for reporting to King County on both buyer eligibility and housing prices.	0.75 bonus unit per benefit unit.
e. Benefit units consisting of moderate income housing reserved for income and asset-qualified home buyers (total household income at or below 80 percent of King County median, adjusted for household size). Benefit units shall be limited to owner-occupied housing with prices restricted based on typical underwriting ratios and other lending standards, and with a 15 year restriction binding prices and eligibility on resale to qualified moderate income purchasers. Final approval conditions shall specify requirements for reporting to King County on both buyer eligibility and housing prices.	1 bonus unit per benefit unit.
f. Benefit units consisting of moderate income housing reserved for income- and asset-qualified home buyers (total household income at or below 80 percent of King County median, adjusted for household size). Benefit units shall be limited to owner-occupied housing, with prices restricted to same income group, based on current underwriting ratios and other lending standards for 30 years from date of first sale. A covenant on the site that specifies the income level and other aspects of buyer eligibility, price levels and requirements for reporting to King County shall be recorded at final approval.	1.5 bonus units per benefit unit.
g. Projects in which 100 percent of	200 percent of the base

the units are reserved for moderate income - and asset-qualified buyers (total household income at or below 80 percent of the King County median, adjusted for household size). All units shall be limited to owner-occupied housing with prices restricted based on current underwriting ratios and other lending standards, and with prices restricted to same income group, for 15 years from date of first sale. Final approval conditions shall specify requirements for reporting to King County on both buyer eligibility and housing prices.	density of the underlying zone. Limited to parcels 5 acres or less in size and located in the R-4 through R-8 zones. Housing types in the R-4 or R-6 zones shall be limited to structures containing four or less units, except for townhouses. Such RDI proposals shall not be eligible to utilize other RDI bonus density incentives listed in this section.
h. Benefit units consisting of mobile home park space or pad reserved for the relocation of an insignia or noninsignia mobile home, that has been or will be displaced due to closure of a mobile home park located in incorporated or unincorporated King County.	1.0 bonus unit per benefit unit.
2. OPEN SPACE, TRAILS AND PARKS	
a. Dedication of park site or trail right-of-way meeting King County location and size standards for neighborhood, community or regional park, or trail, and accepted by the parks division.	0.5 bonus unit per acre of park area or quarter-mile of trail exceeding the minimum requirement of K.C.C. 21A.14 for on-site recreation space or trail corridors, computed on the number of dwelling units permitted by the site's base density.
b. Improvement of dedicated park site to King County standards for developed parks.	0.75 bonus unit per acre of park improvement. If the applicant is dedicating the site of the improvements, the bonus units earned by improvements shall be added to the bonus units earned by the dedication.
c. Improvement of dedicated trail segment to King County standards.	1.8 bonus units per quarter mile of trail constructed to county standard for pedestrian trails; or 2.5 bonus units per quarter mile of constructed to county standard for multipurpose trails (pedestrian/ bicycle/equestrian). Shorter segments shall be awarded bonus units on a pro rata

	basis. If the applicant is dedicating the site of the improvements, the bonus units earned by improvements shall be added to the bonus units earned by the dedication.
d. Dedication of open space, meeting King County acquisition standards to the county or a qualified public or private organization such as a nature conservancy.	0.5 bonus unit per acre of open space.
3. HISTORIC PRESERVATION	
a. Dedication of a site containing an historic landmark in accordance with K.C.C. chapter 20.62, to King County or a qualifying nonprofit organization capable of restoring and/or maintaining the premises to standards set by the King County landmarks commission.	0.5 bonus unit per acre of historic site.
b. Restoration of a site or structure designated as an historic landmark in accordance with K.C.C. chapter 20.62 to a specific architectural or site plan approved by the King County landmarks commission.	0.5 bonus unit per acre of site or one thousand square feet of floor area of building restored.
4. ENERGY CONSERVATION	
a. Benefit units that incorporate conservation features in the construction of all on-site dwelling units heated by electricity that save at least 20 percent of space heat energy use from the maximum permitted by the Northwest Energy Code, as amended. No more than 50 percent of the required savings may result from the installation of heat pumps. None of the required savings shall be achieved by reduction of glazing area below 15 percent of floor area. Energy use shall be expressed as allowable energy load per square foot or as total transmittance (UA).	0.15 bonus unit per benefit unit that achieves the required savings.
b. Benefit units that incorporate conservation features in the construction of all on-site dwelling units heated by natural gas, or other nonelectric heat source, that save at least 25 percent of space heat energy use from the maximum permitted by	0.10 bonus unit per benefit unit that achieves the required savings.

the Northwest Energy Code, as amended. None of the required savings shall be achieved by reduction of glazing area below 15 percent of floor area. Energy use shall be expressed as allowable energy load per square foot or as total transmittance (UA).	
c. Developments located within 1/2 mile of transit routes served on at least a half-hourly basis during the peak hours and hourly during the daytime nonpeak hours or within 1/2 mile of a light rail transit or commuter rail station.	10 percent increase above the base density of the zone.
5. PUBLIC ART	
a. Devoting 1% of the project budget to public art on site.	5 percent increase above the base density of the zone.
b. Contributing 1% of the project budget to the King County public art fund for development of art projects. The contribution shall be used for projects located within a one mile radius of the development project.	5 percent increase above the base density of the zone.
6. COTTAGE HOUSING	
Provision of three to sixteen detached cottage units clustered around at least one common open space.	Two hundred percent of the base density of the underlying zone. Limited to parcels in the R4-R8 zones. Such RDI proposals shall not be eligible to utilize other RDI bonus density incentives listed in this section.
7. COMPACT HOUSING	
In R and UR zones, for the construction of detached single family homes 1500 square feet or smaller.	One hundred fifty percent of the base density of the underlying zone.
8. WALKABLE COMMUNITIES	
In commercial centers located inside the urban growth area, as part of a development proposal that includes	Two hundred percent of the base density of the underlying zone.

elements of walkable design and transit oriented development.

If proposed energy conservation bonus units of this section are reviewed in conjunction with a subdivision or a short subdivision, the applicant shall provide data and calculations for a typical house of the type to be built in the development that demonstrates to the department's satisfaction how the required savings will be achieved. A condition of approval shall be recorded with the plat and shown on the title of each lot specifying the required energy savings that must be achieved in the construction of the dwelling unit. The plat notation shall also specify that the savings shall be based on the energy code in effect at the time of preliminary plat application. (Ord. 16267 § 63, 2008: 15032 § 38, 2004: Ord. 14190 § 36, 2001: Ord. 14045 § 56, 2001: Ord. 10870 § 563, 1993).

21A.34.050 Rules for calculating total permitted dwelling units.

A. The formula for calculating the total number of dwelling units permitted through RDI review is as follows:

DUs allowed by RDI site base density	+	Bonus DUs	+	DUs allowed by sending site density (if any)	= TOTAL RDI DUs

B. The total dwelling units permitted through RDI review shall be calculated using the following steps:

1. Calculate the number of dwellings permitted by the base density of the site in accordance with K.C.C. chapter 21A.12;

2. Calculate the total number of bonus dwelling units earned by providing the public benefits listed in K.C.C. 21A.34.040;

3. Add the number of bonus dwelling units earned to the number of dwelling units permitted by the base density;

4. Add the number of dwelling units permitted by the base density of the site sending TDRs, if any;

5. Round fractional dwelling units to the nearest whole number; .49 or less dwelling units are rounded down; and

6. On sites with more than one zone or zone density, the maximum density shall be calculated for the site area of each zone. Bonus units may be reallocated within the zones in the same manner set forth for base units in K.C.C. 21A.12.180. (Ord. 14190 § 37, 2001: Ord. 10870 § 564, 1993).

21A.34.060 Review process.

A. All RDI proposals shall be reviewed concurrently with a primary proposal to consider the proposed site plan and methods used to earn extra density as follows:

1. For the purpose of this section, a primary proposal is defined as a proposed subdivision, conditional use permit or commercial building permit.

2. When the primary proposal requires a public hearing under this code or Title 19A, the public hearing on the primary proposal shall serve as the hearing on the RDI proposal. The reviewing authority shall make a consolidated decision on the proposed development and use of RDI and consider any appeals of the RDI proposal under the same appeal procedures set forth for the development proposal;

3. When the development proposal does not require a public hearing under this title or K.C.C. Title 19A, the RDI proposal shall be considered along with the development proposal, and any appeals of the RDI proposal shall be considered under the same appeal procedures set forth for the development proposal; and

4. The notice for the RDI proposal also shall include the development's proposed density and a general description of the public benefits offered to earn extra density.

B. RDI applications which propose to earn bonus units by dedicating real property or public facilities shall include a letter from the applicable county receiving agency certifying that the proposed dedication qualifies for the density incentive and will be accepted by the agency or other qualifying organization. (Ord. 14190 § 38, 2001: Ord. 10870 § 565, 1993).

21A.34.070 Minor adjustments in final site plans. When issuing building permits in an approved RDI development, the department may allow minor adjustments in the approved site plan involving the location or dimensions of buildings or landscaping, provided such adjustments shall not:

A. Increase the number of dwelling units;

B. Decrease the amount of perimeter landscaping (if any);

C. Decrease residential parking facilities (unless the number of dwelling units is decreased);

D. Locate structures closer to any site boundary line; or

E. Change the locations of any points of ingress and egress to the site. (Ord. 10870 § 566, 1993).

21A.34.080 Applicability of development standards.

A. RDI developments shall comply with dimensional standards of the zone with a base density most closely comparable to the total approved density of the RDI development, provided that an RDI proposal in the R-4 through R-8 zone shall conform to the height requirements of the underlying zone in which it is located.

B. RDI developments in the R-4 through R-8 zones shall be landscaped as follows:

1. When 75 percent or more of the units in the RDI development consists of townhouses or apartments, the development shall provide perimeter landscaping and tree retention in accordance with K.C.C. 21A.16 for townhouse or apartment projects.

2. When less than 75 percent of the units in the RDI consists of townhouses or apartments, the development shall provide landscaping and tree retention in accordance with K.C.C. 21A.16 for townhouses or apartments on the portion(s) of the development containing such units provided that, if buildings containing such units are more than 100 feet from the development's perimeter, the required landscaping may be reduced by 50 percent.

3. All other portions of the RDI shall provide landscaping or retain trees in accordance with K.C.C. 21A.16.

C. RDI developments in all other zones shall be landscaped or retain trees in accordance with K.C.C. 21A.16.

D. RDI developments shall provide parking as follows:

1. Projects with 100 percent affordable housing shall provide one off-street parking space per unit. The director may require additional parking, up to the maximum standards for attached dwelling units, which may be provided in common parking areas.

2. All other RDI proposals shall provide parking for:

a. market rate/bonus units at levels consistent with K.C.C. 21A.18, and

b. benefit units at 50 percent of the levels required for market rate/bonus units.

E. RDI developments shall provide on-site recreation space as follows:

1. Projects with 100 percent affordable housing shall provide recreation space at 50 percent of the levels required in K.C.C. 21A.14.

2. All other RDI proposals shall provide recreation space for:

a. market rate/bonus units at levels consistent with K.C.C. 21A.14, and

b. benefit units at 50 percent of the levels required for market rate/bonus units. (Ord. 10870 § 567, 1993).

21A.37 GENERAL PROVISIONS - TRANSFER OF DEVELOPMENT RIGHTS (TDR)

Sections:

21A.37.010 Transfer of development rights (TDR) program - purpose.
21A.37.020 Transfer of development rights (TDR) program - sending sites.
21A.37.030 Transfer of development rights (TDR) program - receiving sites.
21A.37.040 Transfer of development rights (TDR) program - calculations.
21A.37.050 Transfer of development rights (TDR) program - development limitations.
21A.37.055 Transfer of development rights (TDR) program - transportation-related greenhouse gas emissions for urban receiving sites.
21A.37.060 Transfer of development rights (TDR) program - documentation of restrictions.
21A.37.070 Transfer of development rights (TDR) program - sending site certification and interagency review committee process.
21A.37.080 Transfer of development rights (TDR) program - transfer process.
21A.37.090 Transfer of development rights (TDR) program - notice.
21A.37.100 Transfer of development rights (TDR) bank -- purpose.
21A.37.110 Transfer of development rights (TDR) bank expenditure and purchase authorization.
21A.37.120 Transfer of development rights (TDR) program - administration of TDR bank.
21A.37.130 Transfer of development rights (TDR) program - sale of TDR rights by TDR bank.
21A.37.140 Transfer of development rights (TDR) program - requirements for transfers by the TDR bank for use in incorporated receiving areas.
21A.37.150 Transfer of development rights (TDR) program - restrictions on expenditure of TDR bank funds on TDR amenities.
21A.37.160 Transfer of development rights (TDR) program - establishment and duties of the TDR executive board.
21A.37.170 Transfer of development rights (TDR) program - exemption from surplus provisions.

21A.37.010 Transfer of development rights (TDR) program - purpose.

A. The purpose of the transfer of development rights program is to transfer residential density from eligible sending sites to eligible receiving sites through a voluntary process that permanently preserves rural, resource and urban separator lands that provide a public benefit. The TDR provisions are intended to supplement land use regulations, resource protection efforts and open space acquisition programs and to encourage increased residential development density or increased commercial square footage, especially inside cities, where it can best be accommodated with the least impacts on the natural environment and public services by:

1. Providing an effective and predictable incentive process for property owners of rural, resource and urban separator land to preserve lands with a public benefit as described in K.C.C. 21A.37.020; and

2. Providing an efficient and streamlined administrative review system to ensure that transfers of development rights to receiving sites are evaluated in a timely

way and balanced with other county goals and policies, and are adjusted to the specific conditions of each receiving site.

B. The TDR provisions in this chapter shall only apply to TDR receiving site development proposals submitted on or after September 17, 2001, and applications for approval of TDR sending sites submitted on or after September 17, 2001. (Ord. 16267 § 64, 2008: Ord. 15032 § 39, 2004: Ord. 14190 § 3, 2001: Ord. 13274 § 1, 1998. Formerly K.C.C. 21A.55.100).

21A.37.020 Transfer of development rights (TDR) program - sending sites.

A. For the purpose of this chapter, sending site means the entire tax lot or lots qualified under subsection B. of this section. Sending sites may only be located within rural or resource lands or urban separator areas with R-1 zoning, as designated by the King County Comprehensive Plan, and shall meet the minimum lot area for construction requirements in K.C.C. 21A.12.100 for the zone in which the sending site is located. Except for lands zoned RA that are managed by the Washington state Department of Natural Resources as state grant or state forest lands, land in public ownership may not be sending sites. If the sending site consists of more than one tax lot, the lots must be contiguous and the area of the combined lots must meet the minimum lot area for construction requirements in K.C.C. 21A.12.100 for the zone in which the sending site is located. For purposes of this section, lots divided by a street are considered contiguous if the lots would share a common lot line if the street was removed; this provision may be waived by the interagency committee if the total acreage of a rural or resource sending site application exceeds one hundred acres. A sending site shall be maintained in a condition that is consistent with the criteria in this section under which the sending was qualified.

B. Qualification of a sending site shall demonstrate that the site contains a public benefit such that preservation of that benefit by transferring residential development rights to another site is in the public interest. A sending site must meet at least one of the following criteria:

1. Designation in the King County Comprehensive Plan or a functional plan as an agricultural production district or zoned A;

2. Designation in the King County Comprehensive Plan or a functional plan as forest production district or zoned F;

3. Designation in the King Count Comprehensive Plan as rural residential, zoned RA-2.5, RA-5 or RA-10, and meeting the definition in RCW 84.34.020 of open space, farm and agricultural land, or timber land;

4. Designation in the King County Comprehensive Plan, or a functional plan as a proposed rural or resource area regional trail or rural or resource area open space site, through either:

a. designation of a specific site; or

b. identification of proposed rural or resource area regional trails or rural or resource area open space sites which meet adopted standards and criteria, and for rural or resource area open space sites, meet the definition of open space land, as defined in RCW 84.34.020;

5. Identification as habitat for federal listed endangered or threatened species in a written determination by the King County department of natural resources and parks, Washington state Department of Fish and Wildlife, United States Fish and Wildlife Services or a federally recognized tribe that the sending site is appropriate for preservation or acquisition; or

6. Designation in the King County Comprehensive Plan as urban separator and zoned R-1.

C. For the purposes of the TDR program, acquisition means obtaining fee simple rights in real property, or a less than a fee simple right in a form that preserves in perpetuity the public benefit supporting the designation or qualification of the property as a sending site.

D. If a sending site has any outstanding code violations, the person responsible for code compliance should resolve these violations, including any required abatement, restoration, or payment of civil penalties, before a TDR sending site may be qualified by the interagency review committee created under K.C.C. 21A.37.070. However, the interagency may qualify and certify a TDR sending site with outstanding code violations if the person responsible for code compliance has made a good faith effort to resolve the violations and the proposal is in the public interest.*

E. For lots on which the entire lot or a portion of the lot has been cleared or graded in accordance with a Class II, III or IV special forest practice as defined in chapter 76.09 RCW within the six years prior to application as a TDR sending site, the applicant must provide an affidavit of compliance with the reforestation requirements of the Forest Practices Act, and any additional reforestation conditions of their forest practice permit. Lots on which the entire lot or a portion of the lot has been cleared or graded without any required forest practices or county authorization, shall be not qualified or certified as a TDR sending site for six years unless the six-year moratorium on development applications has been lifted or waived or the landowner has a reforestation plan approved by the state Department of Natural Resources and King County.* (Ord. 16950 § 28, 2010: Ord. 16267 § 65, 2008: Ord. 15032 § 40, 2004: Ord. 14199 § 240, 2001: Ord. 14190 § 4, 2001: Ord. 14045 § 59, 2001: Ord. 13274 § 4, 1998. Formerly K.C.C. 21A.55.130).

***Reviser's note: K.C.C. 21A.37.020.D. and E. were not included in Ordinance 16950 § 28, but the language was not deleted in accordance with K.C.C. 1.24.075.**

21A.37.030 Transfer of development rights (TDR) program - receiving sites.

A. Receiving sites shall be:

1. King County unincorporated urban sites, except as limited in subsection D. of this section, zoned R-4 through R-48, NB, CB, RB or O, or any combination thereof. The sites may also be within potential annexation areas established under the countywide planning policies; or

2. Cities where new growth is or will be encouraged under the Growth Management Act and the countywide planning policies and where facilities and services exist or where public investments in facilities and services will be made, or

3. RA-2.5 zoned parcels, except as limited in subsection E. of this section, that meet the criteria listed in this subsection A.3. may receive development rights transferred from rural forest focus areas, and accordingly may be subdivided and developed at a maximum density of one dwelling per two and one-half acres. Increased density allowed through the designation of rural receiving areas:

a. must be eligible to be served by domestic Group A public water service;

b. must be located within one-quarter mile of an existing predominant pattern of rural lots smaller than five acres in size;

c. must not adversely impact regionally or locally significant resource areas or critical areas;

d. must not require public services and facilities to be extended to create or encourage a new pattern of smaller lots;

e. must not be located within rural forest focus areas; and

f. must not be located on Vashon Island or Maury Island.

B. Except as provided in this chapter, development of an unincorporated King County receiving site shall remain subject to all zoning code provisions for the base zone, except TDR receiving site developments shall comply with dimensional standards of the zone with a base density most closely comparable to the total approved density of the TDR receiving site development.

C. An unincorporated King County receiving site may accept development rights from one or more sending sites, up to the maximum density permitted under K.C.C. 21A.12.030 and 21A.12.040.

D. Property located within the outer boundaries of the Noise Remedy Areas as identified by the Seattle-Tacoma International Airport may not accept development rights.

E. Property located within the shoreline jurisdiction or located on Vashon Island or Maury Island may not accept development rights. (Ord. 17485 § 31, 2012: Ord. 16267 § 66, 2008: Ord. 15606 § 24, 2006: Ord. 15032 § 41, 2004: Ord. 14190 § 5, 2001: Ord. 14045 § 60, 2001: Ord. 13274 § 5, 1998. Formerly K.C.C. 21A.55.140).

***Reviser's note: The reference to RCW 90.58.020 is erroneous. RCW 90.58.030 was apparently intended.**

21A.37.040 Transfer of development rights (TDR) program - calculations.

A. The number of residential development rights that an unincorporated sending site is eligible to send to a receiving site shall be determined by applying the TDR sending site base density established in subsection D. of this section to the area of the sending site, after deducting the area associated with any existing development, any retained development rights and any portion of the sending site already in a conservation easement or other similar encumbrance. For each existing dwelling unit or retained development right, the sending site area shall be reduced by an area equivalent to the base density for that zone under K.C.C. 21A.12.030.

B. Any fractions of development rights that result from the calculations in subsection A. of this section shall not be included in the final determination of total development rights available for transfer.

C. For purposes of calculating the amount of development rights a sending site can transfer, the amount of land contained within a sending site shall be determined as follows:

1. If the sending site is an entire tax lot, the square footage or acreage shall be determined:

a. by the King County department of assessments records; or

b. by a survey funded by the applicant that has been prepared and stamped by a surveyor licensed in the state of Washington; and

2. If the sending site consists of a lot that is divided by a zoning boundary, the square footage or acreage shall be calculated separately for each zoning classification. The square footage or acreage within each zoning classification shall be determined by the King County record of the action that established the zoning and property lines, such as an approved lot line adjustment. When such records are not available or are not adequate to determine the square footage or acreage within each zoning classification, the department of permitting and environmental review shall calculate the square footage or acreage through the geographic information system (GIS) mapping system.

D. For the purposes of the transfer of development rights (TDR) program only, the following TDR sending site base densities apply:

1. Sending sites designated in the King County Comprehensive Plan as urban separator and zoned R-1 shall have a base density of four dwelling units per acre;

2. Sending sites zoned RA-2.5 shall have a base density of one unit for each two and one-half acres. Sending sites zoned RA-2.5 that are vacant and are smaller than 1.25 acres shall be allocated one additional TDR for each vacant lot that is smaller than 1.25 acres;

3. Sending sites zoned RA-5 or RA-10 shall have a base density of one dwelling unit per five acres. Vacant sending sites that are zone RA-5 and are smaller than two and one-half acres or that are zoned RA-10 and are smaller than five acres shall be allocated on additional TDR for each vacant lot that is smaller than two and one-half acres or five acres, respectively;

4. Sending sites zoned RA and that have a designation under the King County Shoreline Master Program of conservancy or natural shall be allocated one additional TDR;

5. Sending sites zoned A-10 and A-35 shall have a base density of one dwelling unit per five acres for transfer purposes only;

6. Sending sites zoned F within the forest production district shall have a base density of one dwelling unit per eighty acres or one dwelling unit per each lot that is between fifteen and eighty acres in size.

E. A sending site zoned RA, A or F may send one development right for every legal lot larger than five thousand square feet that was created on or before September 17, 2001, if that number is greater than the number of development rights determined under subsection A. of this section. A sending site zoned R-1 may send one development right for every legal lot larger than two thousand five hundred square feet that was created on or before September 17, 2001, if that number is greater than the number of development rights determined under subsection A. of this section.

F. The number of development rights that a King County unincorporated rural or natural resources land sending site is eligible to send to a King County incorporated urban area receiving site shall be determined through the application of a conversion ratio established by King County and the incorporated municipal jurisdiction. The conversion ratio will be applied to the number of available sending site development rights determined under subsection A. or E. of this section.

G. Development rights from one sending site may be allocated to more than one receiving site and one receiving site may accept development rights from more than one sending site.

H. The determination of the number of residential development rights a sending site has available for transfer to a receiving site shall be valid for transfer purposes only, shall be documented in a TDR qualification report prepared by the department of natural resources and parks and sent to the applicant. The qualification report and shall be considered a final determination, not to be revised due to changes to the sending site's zoning, and shall be valid unless conditions on the sending site property that would affect the number of development rights the sending site has available for transfer have changed.

I. Each residential transferable development right that originates from a sending site zoned RA, A or F shall be designated "Rural" and is equivalent to two additional units above base density in eligible receiving sites located in unincorporated urban King County. Each residential transferable development right that originates from a sending site zoned R-1 urban separator shall be designated "Urban" and is equivalent to one additional unit above base density. (Ord. 17485 § 32, 2012: Ord. 17420 § 111, 2012: Ord. 16950 § 29, 2010: Ord. 16267 § 67, 2008: Ord. 15032 § 42, 2004: Ord. 14190 § 6, 2001: Ord. 14045 § 61, 2001: Ord. 13274 § 6, 1998. Formerly K.C.C. 21A.55.150).

21A.37.050 Transfer of development rights (TDR) program - development limitations.

A. Following the transfer of residential development rights a sending site may subsequently accommodate remaining residential dwelling units, if any, on the buildable portion of the parcel or parcels or be subdivided, consistent with the zoned base density provisions of the density and dimensions tables in K.C.C. 21A.12.030 and 21A.12.040, the allowable dwelling unit calculations in K.C.C. 21A.12.070 and other King County development regulations. Any remaining residential dwelling units and associated accessory units shall be located in a single and contiguous reserved residential area that shall be adjacent to any existing development or roadways on the property. The reserved residential area shall be equal to the acreage associated with the minimum lot size of the zone for each remaining residential dwelling unit. For sending sites zoned RA, the subdivision potential remaining after a density transfer may only be actualized through a clustered subdivision, short subdivision or binding site plan that creates a permanent preservation tract as large or larger than the portion of the subdivision set aside as lots. Within rural forest focus areas, resource use tracts shall be at least fifteen acres of contiguous forest land.

B. Only those nonresidential uses directly related to, and supportive of the criteria under which the site qualified are allowed on a sending site.

C. The applicable limitations in this section shall be included in the sending site conservation easement. (Ord. 17485 § 33, 2012: Ord. 15245 § 10, 2005: Ord. 15032 § 43, 2004: Ord. 14190 § 7, 2001).

21A.37.055 Transfer of development rights (TDR) program - transportation-related greenhouse gas emissions for urban receiving sites. An urban receiving site that purchases rural TDRs may include the reduced transportation-related greenhouse gas emissions that the department of natural resources and parks estimates will result from the TDR in calculating the receiving site's greenhouse gas emissions. (Ord. 17485 § 34, 2012: Ord. Ord. 16267 § 68, 2008).

21A.37.060 Transfer of development rights (TDR) program - documentation of restrictions.

A. Prior to issuing a certificate for transferable development rights to a sending site, the department of natural resources and parks, or its successor shall record deed restrictions in the form of a conservation easement documenting the development rights that have been removed from the property and shall place a notice on the title of the sending site. The department of permitting and environmental review, or its successor, shall establish and maintain an internal tracking system that identifies all certified transfer of developments rights sending sites.

B. A conservation easement granted to the county or other appropriate land management agency and that meets the requirements of K.C.C. 21A.37.050 shall be required for land contained in the sending site. The conservation easement shall be documented by a map. The conservation easement shall be placed on the entire lot or lots. The conservation easement shall identify limitations in perpetuity on future residential and nonresidential development consistent with this chapter, as follows:

1. A conservation easement, which contains the easement map, shall be recorded on the entire sending site to indicate development limitations on the sending site;

2. For a sending site zoned A-10 or A-35, the conservation easement shall be consistent in form and substance with the purchase agreements used in the agricultural land development rights purchase program. The conservation easement shall preclude subdivision of the subject property but may permit not more than one dwelling per sending site, and shall permit agricultural uses as provided in the A-10 or A-35 zone;

3. For a rural sending site the conservation easement shall allow for restoration, maintenance or enhancement of native vegetation. A present conditions report shall be required to document the location of existing structures and existing native vegetation and the baseline conservation values of protected property at the time the conservation easement is put in place. If residential development will be allowed on the site under the conservation easement, the present conditions report shall be used to guide the location of residential development;

4. For a sending site qualifying as habitat for federal listed endangered or threatened species, the conservation easement shall protect habitat and allow for restoration, maintenance or enhancement of native vegetation. A present conditions report shall be required to document the location of existing structures. If existing or future residential development will be allowed on the site under the conservation easement, the present conditions report shall be used by the owner to guide the location of residential development; and

5. For a sending site zoned F, the conservation easement shall encumber the entire sending site. Lots between fifteen acres and eighty acres in size are not eligible to participate in the TDR program if they include any existing dwelling units intended to be retained, or if a new dwelling unit is proposed. For eligible lots between fifteen acres and eighty acres in size, the sending site must include the entire lot. For lots greater than eighty acres in size, the sending site shall be a minimum of eighty acres. The conservation easement shall permit forestry uses subject to a forest stewardship plan prepared by the applicant and approved by the county for ongoing forest management practices. The Forest Stewardship Plan shall serve as a present conditions report documenting the baseline conditions of the property and shall include a description of the site's forest resources and the long term forest management objectives of the property owner, and shall not impose standards that exceed Title 222 WAC. (Ord. 17485 § 35, 2012: Ord. 17420 § 112, 2012: Ord. 16267 § 69, 2008: Ord. 15032 § 44, 2004: Ord. 14190 § 8, 2001).

21A.37.070 Transfer of development rights (TDR) program - sending site certification and interagency review committee process.

A. An interagency review committee, chaired by the directors of the department of permitting and environmental review and the department of natural resources and parks, or their designees, shall be responsible for qualification of sending sites. Determinations on sending site certifications made by the committee are appealable to the examiner under K.C.C. 20.24.080. The department of natural resources and parks shall be responsible for preparing a TDR qualification report, which shall be signed by the director of the department of natural resources and parks or the director's designee, documenting the review and decision of the committee. The qualification report shall:

1. Specify all deficiencies of an application, if the decision of the committee is to disqualify the application;

2. For all qualifying applications, provide a determination as to whether or not additional residential dwelling units and associated accessory units may be accommodated in accordance with Ordinance 17985, Section 19.A*: and

3. Be issued a TDR certification letter within sixty days of the date of submittal of a completed sending site certification application.

B. Responsibility for preparing a completed application rests exclusively with the applicant. Application for sending site certification shall include:

1. A legal description of the site;
2. A title report;
3. A brief description of the site resources and public benefit to be preserved;

4. A site plan showing the existing and proposed dwelling units, nonresidential structures, driveways, submerged lands and any area already subject to a conservation easement or other similar encumbrance;

5. Assessors map or maps of the lot or lots;

6. A statement of intent indicating whether the property ownership, after TDR certification, will be retained in private ownership or dedicated to King County or another public or private nonprofit agency;

7. Any or all of the following written in conformance with criteria established through a public rule consistent with K.C.C. chapter 2.98, if the site is qualifying as habitat for a threatened or endangered species:

a. a wildlife habitat conservation plan;

b. a wildlife habitat restoration plan; or

c. a wildlife present conditions report;

8. A forest stewardship plan, written in conformance with criteria established through a public rule consistent with K.C.C. chapter 2.98, if required under K.C.C. 21A.37.060.B.3. and 6.;

9. An affidavit of compliance with the reforestation requirements of the Forest Practices Act and any additional reforestation conditions of the forest practices permit for the site, if required under K.C.C. 21A.37.020.E;

10. A completed density calculation worksheet for estimating the number of available development rights; and

11. The application fee consistent with K.C.C. 27.36.020. (Ord. 17485 § 36, 2012: Ord. 17420 § 113, 2012: Ord. 15032 § 45, 2004: Ord. 14561 § 28, 2002: Ord. 14199 § 241, 2001: Ord.14190 § 9, 2001: Ord. 13274 § 7, 1998. Formerly K.C.C. 21A55.160

***Reviser's note: The reference in Ordinance 17485 to "subsection A of section 19 of this ordinance," which is K.C.C. 21A.24.051.A, is apparently erroneous. It seems that the reference was intended to be to K.C.C. 21A.37.050.A.**

21A.37.080 Transfer of development rights (TDR) program - transfer process.

A. TDR development rights where both the proposed sending and receiving sites would be within unincorporated King County shall be transferred using the following process:

1. Following interagency review committee review and approval of the sending site application as described in K.C.C. 21A.37.070 the interagency review committee shall issue a TDR qualification report, agreeing to issue a TDR certificate in exchange for the proposed sending site conservation easement. After signing and notarizing the conservation easement and receiving the TDR certificate from the county, the sending site owner may market the TDR sending site development rights to potential purchasers. The TDR certificate shall be in the name of the property owner and separate from the land title. If a TDR sending site that has been reviewed and approved by the interagency review committee changes ownership, the TDR qualification report may be transferred to the new owner if requested in writing to the department of natural resources and parks by the person or persons that owned the property when the TDR qualification report was issued, if documents evidencing the transfer of ownership are also provided to the department of natural resources and parks;

2. In applying for receiving site approval, the applicant shall provide the department of permitting and environmental review with one of the following:

a. a TDR qualification report issued in the name of the applicant,

b. a TDR qualification report issued in the name of another person or persons and a copy of a signed option to purchase those TDR sending site development rights,

c. a TDR certificate issued in the name of the applicant, or

d. a TDR certificate issued in the name of another person or persons and a copy of a signed option to purchase those TDR sending site development rights;

3. Following building permit approval, but before building permit issuance by the department of permitting and environmental review or following preliminary plat approval or preliminary short plat approval, but before final plat or short plat recording of a receiving site development proposal which includes the use of TDR development rights, the receiving site applicant shall deliver the TDR certificate issued in the applicant's name for the number of TDR development rights being used and the TDR extinguishment document to the county;

4. When the receiving site development proposal requires a public hearing under this title or K.C.C. Title 19A or its successor, that public hearing shall also serve as the hearing on the TDR proposal. The reviewing authority shall make a consolidated decision on the proposed development and use of TDR development rights and consider any appeals of the TDR proposal under the same appeal procedures set forth for the development proposal; and

5. When the development proposal does not require a public hearing under this title or K.C.C. Title 19A, the TDR proposal shall be considered along with the development proposal, and any appeals of the TDR proposal shall be considered under the same appeal procedures set forth for the development proposal.

6. Development rights from a sending site shall be considered transferred to a receiving site when a final decision is made on the TDR receiving area development proposal, the sending site is permanently protected by a completed and recorded land dedication or conservation easement, notification has been provided to the King County assessor's office and a TDR extinguishment document has been provided to the department of natural resources and parks, or its successor agency.

B. TDR development rights where the proposed receiving site would be within an incorporated King County municipal jurisdiction shall be reviewed and transferred using that jurisdiction's development application review process. (Ord. 17485 § 37, 2012: Ord. 17420 § 114, 2012: Ord. 16267 § 70, 2008: Ord. 15032 § 46, 2004: Ord. 14190 § 10, 2001: Ord. 13274 § 8, 1998. Formerly K.C.C. 21A.55.170).

21A.37.090 Transfer of development rights (TDR) program - notice. Public notice consistent with the provisions of K.C.C. 20.20.060 for Type Four land use decisions shall be provided for parcels identified as TDR receiving sites. (Ord. 14190 § 11, 2001: Ord. 13274 § 9, 1998. Formerly K.C.C. 21A.55.180).

21A.37.100 Transfer of development rights (TDR) bank -- purpose. The purpose of the TDR bank is to assist in the implementation of the transfer of development rights (TDR) program by bridging the time gap between willing sellers and buyers of development rights by purchasing and selling development rights, purchasing conservation easements, and facilitating interlocal TDR agreements with cities in King County through the provision of amenity funds. The TDR bank may acquire development rights and conservation easements only from sending sites located in the rural area or in an agricultural or forest production district as designated in the King County Comprehensive Plan. Development rights purchased from the TDR bank may only be used for receiving sites in cities or in the urban unincorporated area as designated in the King County Comprehensive Plan. (Ord. 17485 § 38, 2012: Ord. 16267 § 71, 2008: Ord. 14763 § 1, 2003: Ord. 14190 § 12, 2001: Ord. 14045 § 62, 2001: Ord. 13733 § 8, 2000. Formerly K.C.C. 21A.55.200).

21A.37.110 Transfer of development rights (TDR) bank expenditure and purchase authorization.

A. The TDR bank may purchase development rights from qualified sending sites at prices not to exceed fair market value and to sell development rights at prices not less than fair market value. The TDR bank may accept donations of development rights from qualified TDR sending sites.

B. The TDR bank may purchase a conservation easement only if the property subject to the conservation easement is qualified as a sending site as evidenced by a TDR qualification report, the conservation easement restricts development of the sending site in the manner required by K.C.C. 21A.37.060 and the development rights generated by encumbering the sending site with the conservation easement are issued to the TDR bank at no additional cost.

C. If a conservation easement is acquired through a county park, open space, trail, agricultural, forestry or other natural resource acquisition program for a property that is qualified as a TDR sending site as evidenced by a TDR qualification report, any development rights generated by encumbering the sending site with the conservation easement may be issued to the TDR bank so long as there is no additional cost for the development rights.

D. The TDR bank may use funds to facilitate development rights transfers. These expenditures may include, but are not limited to, establishing and maintaining internet web pages, marketing TDR receiving sites, procuring title reports and appraisals and reimbursing the costs incurred by the department of natural resources and parks, water and land resources division, or its successor, for administering the TDR bank fund and executing development rights purchases and sales.

E. The TDR bank fund may be used to cover the cost of providing staff support for identifying and qualifying sending and receiving sites, and the costs of providing staff support for the TDR interagency review committee.

F. Upon approval of the TDR executive board, proceeds from the sale of TDR bank development rights shall be available for acquisition of additional development rights and as amenity funds to facilitate interlocal TDR agreements with cities in King County. Amenity funds provided to a city from the sale of TDR bank development rights to that city are limited to one-third of the proceeds from the sale. (Ord. 17485 § 39, 2012: Ord. 16950 § 30, 2010: Ord. 16267 § 72, 2008: Ord. 15032 § 47, 2004: Ord. 14763 § 2, 2003: Ord. 14561 § 29, 2002: Ord. 14199 § 242, 2001: Ord. 14190 § 13: Ord. 13733 § 10, 2000. Formerly K.C.C. 21A.55.210).

21A.37.120 Transfer of development rights (TDR) program - administration of TDR bank.

A. The department of natural resources and parks, water and land resources division, or its successor, shall administer the TDR bank fund and execute purchases of development rights and conservation easements and sales of development rights in a timely manner consistent with policy set by the TDR executive board. These responsibilities include, but are not limited to:

1. Managing the TDR bank fund;
2. Authorizing and monitoring expenditures;
3. Keeping records of the dates, amounts and locations of development rights purchases and sales, and conservation easement purchases;
4. Executing development rights purchases, sales and conservation easements; and
5. Providing periodic summary reports of TDR bank activity for TDR executive board consideration.

B. The department of natural resources and parks, water and land resources division, or its successor, in executing purchase and sale agreements for acquisition of development rights and conservation easements shall ensure sufficient values are being obtained and that all transactions, conservation easements or fee simple acquisitions are consistent with public land acquisition guidelines. (Ord. 14763 § 3, 2003: Ord. 14199 § 243, 2001: Ord. 14190 § 14, 2001: Ord. 13733 § 11, 2000. Formerly K.C.C. 21A.55.220).

21A.37.130 Transfer of development rights (TDR) program - sale of TDR rights by TDR bank.

A. The sale of development rights by the TDR bank shall be at a price that equals or exceeds the fair market value of the development rights. The fair market value of the development rights shall be established by the department of natural resources and shall be based on the amount the county paid for the development rights and the prevailing market conditions.

B. When selling development rights, the TDR bank may select prospective purchasers based on the price offered for the development rights, the number of development rights offered to be purchased, and the potential for the sale to achieve the purposes of the TDR program.

C. The TDR bank may sell development rights only in whole or half increments to incorporated receiving sites through an interlocal agreement or, after the county enacts legislation that complies with chapter 365-198 WAC, to incorporated receiving sites in a city that has enacted legislation that complies with chapter 365-198 WAC. The TDR bank may sell development rights only in whole increments to unincorporated King County receiving sites.

D. All offers to purchase development rights from the TDR bank shall be in writing, shall include a certification that the development rights, if used, shall be used only inside an identified city or within the urban unincorporated area, include a minimum ten percent down payment with purchase option, shall include the number of development rights to be purchased, location of the receiving site, proposed purchase price and the required date or dates for completion of the sale, not later than three years after the date of receipt by King County of the purchase offer.

E. Payment for purchase of development rights from the TDR bank shall be in full at the time the development rights are transferred unless otherwise authorized by the department of natural resources and parks. (Ord. 17485 § 40, 2012: Ord. 15032 § 48, 2004: Ord. 14199 § 244, 2001: Ord. 14190 § 15, 2001: Ord. 13733 § 12, 2000. Formerly K.C.C. 21A.55.230).

21A.37.140 Transfer of development rights (TDR) program - requirements for transfers by the TDR bank for use in incorporated receiving areas.

A. For development rights sold by the TDR bank to be used in incorporated receiving site areas, the county and the affected city or cities must either have executed an interlocal agreement and the city or cities must have enacted appropriate legislation to implement the program for the receiving area or the county and the affected city or cities must each have enacted legislation that complies with chapter 365-198 WAC.

B.1. At a minimum, each interlocal agreement shall:

a. [shall]* describe the legislation that the receiving jurisdiction adopted or will adopt to allow the use of development rights;

b. shall identify the receiving area;

c. shall require the execution of a TDR extinguishment document in conformance with K.C.C. 21A.37.080; and

d. shall address the conversion ratio to be used in the receiving site area.

2. If the city is to receive any amenity funds, the interlocal agreement shall set forth the amount of funding and the amenities to be provided in accordance with K.C.C. 21A.37.150 I. Such an interlocal agreement may also indicate that a priority should be given by the county to acquiring development rights from sending sites in specified geographic areas. If a city has a particular interest in the preservation of land in a rural or resource area or in the specific conditions on which it will be preserved, then the interlocal agreement may provide for periodic inspection or special terms in the conservation easement to be recorded against the sending site as a pre acquisition condition to purchases of development rights within specified areas by the TDR bank.

C. A TDR conversion ratio for development rights purchased from a sending site and transferred to an incorporated receiving site area may express the amount of additional development rights in terms of any combination of units, floor area, height or other applicable development standards that may be modified by the city to provide incentives for the purchase of development rights. (Ord. 17485 § 41, 2012: Ord. 14190 § 16, 2001: Ord. 13733 § 13, 2000. Formerly K.C.C. 21A.55.240).

***Reviser's note: Language added but not underlined in Ordinance 17485. See K.C.C. 1.24.075.**

21A.37.150 Transfer of development rights (TDR) program - restrictions on expenditure of TDR bank funds on TDR amenities.

A. Expenditures by the county for amenities to facilitate development rights sales shall be authorized by the TDR executive board during review of proposed interlocal agreements, and should be roughly proportionate to the value and number of development rights anticipated to be accepted in an incorporated receiving site pursuant to the controlling interlocal agreement, or in the unincorporated urban area, in accordance with K.C.C. 21A.37.040.

B. The county shall not expend funds on TDR amenities in a city before execution of an interlocal agreement, except that:

1. The executive board may authorize up to twelve thousand dollars be spent by the county on TDR amenities before a development rights transfer for use at a receiving site or for the execution of an interlocal agreement if the TDR executive board recommends that the funds be spent based on a finding that the expenditure will expedite a proposed transfer of development rights or facilitate acceptance of a proposed transfer of development rights by the community around a proposed or established receiving site area;

2. King County may distribute the funds directly to a city if a scope of work, schedule and budget governing the use of the funds is mutually agreed to in writing by King County and the affected city. Such an agreement need not be in the form of an interlocal agreement; and

3. The funds may be used for project design renderings, engineering or other professional services performed by persons or entities selected from the King County approved architecture and engineering roster maintained by the department of finance or an affected city's approved architecture and engineering roster, or selected by an affected city through its procurements processes consistent with state law and city ordinances.

C. TDR amenities may include the acquisition, design or construction of public art, cultural and community facilities, parks, open space, trails, roads, parking, landscaping, sidewalks, other streetscape improvements, transit-related improvements or other improvements or programs that facilitate increased densities on or near receiving sites.

D. When King County funds amenities in whole or in part, the funding shall not commit the county to funding any additional amenities or improvements to existing or uncompleted amenities.

E. King County funding of amenities shall not exceed appropriations adopted by the council or funding authorized in interlocal agreements, whichever is less.

F. Public transportation amenities shall enhance the transportation system. These amenities may include capital improvements such as passenger and layover facilities, if the improvements are within a designated receiving area or within one thousand five hundred feet of a receiving site. These amenities may also include programs such as the provision of security at passenger and layover facilities and programs that reduce the use of single occupant vehicles, including car sharing and bus pass programs.

G. Road fund amenities shall enhance the transportation system. These amenities may include capital improvements, such as streets, traffic signals, sidewalks, street landscaping, bicycle lanes and pedestrian overpasses, if the improvements are within a designated receiving site area or within one thousand five hundred feet of a receiving site. These amenities may also include programs that enhance the transportation system.

H. All amenity funding provided by King County to cities to facilitate the transfer of development rights shall be consistent with federal, state and local laws.

I. The timing and amounts of funds for amenities paid by King County to each participating city shall be determined in an adopted interlocal agreement. The interlocal agreement shall set forth the amount of funding to be provided by the county, an anticipated scope of work, work schedule and budget governing the use of the amenity funds. Except for the amount of funding to be provided by the county, these terms may be modified by written agreement between King County and the city. Such an agreement need not be in the form of an interlocal agreement. Such an agreement must be authorized by the TDR executive board. If amenity funds are paid to a city to operate a program, the interlocal agreement shall set the period during which the program is to be funded by King County.

J. A city that receives amenity funds from the county is responsible for using the funds for the purposes and according to the terms of the governing interlocal agreement.

K. To facilitate timely implementation of capital improvements or programs at the lowest possible cost, King County may make amenity payments as authorized in an interlocal agreement to a city before completion of the required improvements or implementation programs, as applicable. If all or part of the required improvements or implementation programs in an interlocal agreement to be paid for from King County funds are not completed by a city within five years from the date of the transfer of amenity funds, then, unless the funds have been used for substitute amenities by agreement of the city and King County, those funds, plus interest, shall be returned to King County and deposited into the originating amenity fund for reallocation to other TDR projects.

L. King County is not responsible for maintenance, operating and replacement costs associated with amenity capital improvements inside cities, unless expressly agreed to in an interlocal agreement. (Ord. 17485 § 42, 2012: Ord. 14190 § 17, 2001: Ord. 13733 § 14, 2000. Formerly K.C.C. 21A.55.250).

21A.37.160 Transfer of development rights (TDR) program - establishment and duties of the TDR executive board.

A. The TDR executive board is hereby established. The TDR executive board shall be composed of the director of the budget office, the director of the department of

natural resources and parks, the director of the department of transportation and the director of finance, or their designees. A representative from the King County council staff, designated by the council chair, may participate as an ex officio, nonvoting member of the TDR executive board. The TDR executive board shall be chaired by the director of the department of natural resources and parks or that director's designee.

B. The issues that may be addressed by the executive board include, but are not limited to, using site evaluation criteria established by administrative rules, ranking and selecting sending sites to be purchased by the TDR bank, recommending interlocal agreements and the provision of TDR amenities, if any, to be forwarded to the executive, identifying future funding for amenities in the annual budget process, enter into other written agreements necessary to facilitate density transfers by the TDR bank and otherwise oversee the operation of the TDR bank to measure the effectiveness in achieving the policy goals of the TDR program.

C. The department of natural resources and parks shall provide lead staff support to the TDR executive board. Staff duties include, but are not limited to:

1. Making recommendations to the TDR executive board on TDR program and TDR bank issues on which the TDR executive board must take action;

2. Facilitating development rights transfers through marketing and outreach to the public, community organizations, developers and cities;

3. Identifying potential receiving sites;

4. Developing proposed interlocal agreements with cities;

5. Assisting in the implementation of TDR executive board policy in cooperation with other departments;

6. Ranking certified sending sites for consideration by the TDR executive board;

7. Negotiating with cities to establish city receiving areas with the provision of amenities;

8. Preparing agendas for TDR executive board meetings;

9. Recording TDR executive board meeting summaries;

10. Preparing administrative rules in accordance with K.C.C. chapter 2.98 to implement this chapter; and

11. Preparing periodic reports on the progress of the TDR program to the council with assistance from other departments. (Ord. 15032 § 49, 2004: Ord. 14763 § 4, 2003: Ord. 14561 § 30, 2002: Ord. 14199 § 245, 2001: Ord. 14190 § 18, 2001: Ord. 13733 § 15, 2000. Formerly K.C.C. 21A.55.260).

21A.37.170 Transfer of development rights (TDR) program - exemption from surplus provisions. The transfer of development rights from the TDR bank may be completed consistent with King County's needs and in accordance with the criteria of this chapter. The transfers are exempt from the real and personal property provisions of K.C.C. chapter 4.56. (Ord. 14190 § 19, 2001: Ord. 13733 § 16, 2000. Formerly K.C.C. 21A.55.270).

21A.38 GENERAL PROVISIONS - PROPERTY-SPECIFIC DEVELOPMENT STANDARDS/SPECIAL DISTRICT OVERLAYS

Sections:

21A.38.010 Purpose.
21A.38.020 Authority and application.
21A.38.030 Property-specific development standards - general provisions.
21A.38.040 Special district overlay - general provisions.
21A.38.050 Special district overlay - pedestrian-oriented commercial development.

21A.38.060 Special district overlay - office/research park development.
21A.38.070 Special district overlay - Urban Planned Development (UPD) purpose and designation.
21A.38.080 Special district overlay - UPD implementation.
21A.38.090 Special district overlay - economic redevelopment.
21A.38.100 Special district overlay - commercial/industrial.
21A.38.110 Special district overlay - fully contained community (FCC) purpose, designation, and implementation.
21A.38.120 Special district overlay - wetland management areas.
21A.38.130 Special district overlay - agricultural production buffer.
21A.38.140 Special district overlay - residential infill.
21A.38.150 Special district overlay - ground water protection.
21A.38.160 Special district overlay - aviation facilities.
21A.38.170 Special district overlay - urban aquifer protection area.
21A.38.180 Special district overlay - highway-oriented development.
21A.38.200 Special district overlay - erosion hazards near sensitive water bodies.
21A.38.210 Special district overlay - heron habitat protection area.
21A.38.240 Special district overlay - floodplain density.
21A.38.260 Special district overlay - Fall City business district.

21A.38.010 Purpose. The purposes of this chapter are to provide for alternative development standards to address unique site characteristics and to address development opportunities which can exceed the quality of standard developments, by:

A. Establishing authority to adopt property-specific development standards for increasing minimum requirements of this title on individual sites; or

B. Establishing special district overlays with alternative standards for special areas designated by community plans or the Comprehensive Plan. (Ord. 12171 § 4, 1996: Ord. 10870 § 574, 1993).

21A.38.020 Authority and application.

A. This chapter authorizes King County to increase development standards or limit uses on specific properties beyond the general requirements of this title through property-specific development standards, and to carry out comprehensive plan policies and map designations and community, subarea or neighborhood plan policies through special overlay districts that supplement or modify standard zones through different uses, design or density standards or review processes;

B. Property-specific development standards shall be applied to specific properties through either area zoning as provided in K.C.C. chapter 20.12 and 20.18, or reclassifications of individual properties as provided in K.C.C. chapters 20.24 and 21A.44; and

C. Special district overlays shall be applied to specific properties or areas containing several properties through the area zoning process as provided in K.C.C. chapters 20.12 and 20.18. (Ord. 17841 § 54, 2014: Ord. 12823 § 2, 1997: Ord. 12809 § 3, 1997: Ord. 12171 § 5, 1996: Ord. 10870 § 575, 1993).

21A.38.030 Property-specific development standards - general provisions.

A. Property-specific development standards, denoted by the zoning map symbol -P after the zone's map symbol or a notation in the geographic information system data layers, shall be established on individual properties through either reclassifications or area zoning. All property-specific development standards are contained in Appendix of Ordinance 12824* as currently in effect or hereinafter amended and shall be maintained by the department of permitting and environmental review in the Property

Specific Development Conditions notebook. Upon the effective date of reclassification of a property to a zone with a "-P" suffix, the property-specific development standards adopted thereby shall apply to any development proposal on the subject property subject to county review, including, but not limited to, a building permit, grading permit, subdivision, short subdivision, subsequent reclassification to a potential zone, urban planned development, conditional use permit, variance and special use permit.

B. Property-specific development standards shall address problems unique to individual properties or a limited number of neighboring properties that are not addressed or anticipated by general minimum requirements of this title or other regulations.

C. Property-specific development standards shall cite the provisions of this title, if any, that are to be augmented, limited, or increased, shall be supported by documentation that addresses the need for such a condition or conditions, and shall include street addresses, tax lot numbers or other clear means of identifying the properties subject to the additional standards. Property-specific development standards are limited to:

1. Limiting the range of permitted land uses;

2. Requiring special development standards for property with physical constraints (e.g. environmental hazards, view corridors);

3. Requiring specific site design features (e.g. building orientation, lot layout, clustering, trails or access location);

4. Specifying the phasing of the development of a site;

5. Requiring public facility site dedications or improvements (e.g. roads, utilities, parks, open space, trails, school sites); or

6. Designating sending and receiving sites for transferring density credits as provided in K.C.C. 21A.36.

D. Property-specific development standards shall not be used to expand permitted uses or reduce minimum requirements of this title. (Ord. 17485 § 45, 2012: Ord. 17420 § 115, 2012: Ord. 12824 § 21, 1997: Ord. 11621 § 97, 1994: Ord. 10870 § 576, 1993).

***Available in the office of the clerk of the council.**

21A.38.040 Special district overlay - general provisions. Special district overlays shall be designated on official area zoning maps and as a notation in the department's electronic parcel record, as follows:

A. A special district overlay shall be designated through the area zoning process as provided in K.C.C. chapters 20.12 and 20.18. Designation of an overlay district shall include policies that prescribe the purposes and location of the overlay;

B. A special district overlay shall be applied to land through an area zoning process as provided in K.C.C. chapters 20.12 and 20.18 and shall be indicated on the zoning map and as a notation in the department's electronic parcel record and shall be designated in Appendix B of Ordinance 12824* as maintained by the department of permitting and environmental review, with the suffix "-SO" following the map symbol of the underlying zone or zones;

C. The special district overlays in this chapter are the only overlays authorized by the code. New or amended overlays to carry out new or different goals or policies shall be adopted as part of this chapter and be available for use in all appropriate community, subarea or neighborhood planning areas;

D. The special district overlays in this chapter may waive, modify and substitute for the range of permitted uses and development standards established by this title for any use or underlying zone;

E. Unless they are specifically modified by this chapter, the standard requirements of this title and other county ordinances and regulations govern all development and land uses within special district overlays;

F. A special district overlay on an individual site may be modified by property-specific development standards as provided in K.C.C. 21A.38.030;

G. A special district overlay may not be deleted by a zone reclassification; and

H. Special district overlay development standards may be modified or waived through the consideration of a variance, subject to the variance criteria in K.C.C. 21A.44.030. (Ord. 17841 § 55, 2014: Ord. 17420 § 116, 2012: Ord. 15051 § 216, 2004: Ord. 12823 § 3, 1997: Ord. 12809 § 4, 1997: Ord. 12171 § 6, 1996: Ord. 11621 § 98, 1994: Ord. 10870 § 577, 1993).

***Available in the King County Archives.**

21A.38.050 Special district overlay - pedestrian-oriented commercial development.

A. The purpose of the pedestrian-oriented commercial development special district overlay is to provide for high-density, pedestrian-oriented retail/employment uses. Pedestrian-oriented commercial district shall only be established in areas designated within a community, subarea, or neighborhood plan as an urban activity center and zoned CB, RB or O.

B. Permitted uses shall be those uses permitted in the underlying zone, excluding the following:

1. Motor vehicle, boat and mobile home dealer;
2. Gasoline service station;
3. Drive-through retail and service uses;
4. Car washes;
5. Retail and service uses with outside storage, e.g. lumber yards, miscellaneous equipment rental or machinery sales;
6. Wholesale uses;
7. Recreation/cultural uses as set forth in K.C.C. 21A.08.040, except parks, sports clubs, theaters, libraries and museums;
8. SIC Major Group 75 (Automotive repair, services and parking) except 7521 (automobile parking; but excluding tow-in parking lots);
9. SIC Major Group 76 (Miscellaneous repair services), except 7631 (Watch, clock and jewelry repair);
10. SIC Major Group 78 (Motion pictures), except 7832 (theater) and 7841 (video tape rental);
11. SIC Major Group 80 (Health services), except offices and outpatient clinics (801-804);
12. SIC Industry Group 421 (Trucking and courier service);
13. Public agency archives;
14. Self-service storage;
15. Manufacturing land uses as set forth in K.C.C. 21A.08.080, except 2759 (Commercial printing); and
16. Resource land uses as set forth in K.C.C. 21A.08.090.

C. The following development standards shall apply to uses located in pedestrian-oriented commercial overlay districts:

1. Every use shall be subject to pedestrian-oriented use limitations and street facade development standards (e.g. placement and orientation of buildings with respect to streets and sidewalks, arcades or marquees) identified and adopted through an applicable community, subarea or, neighborhood plan, or the area zoning process;

2. For properties that have frontage on pedestrian street(s) or routes as designated in an applicable plan or area zoning process, the following conditions shall apply:

a. main building entrances shall be oriented to the pedestrian street;

b. at the ground floor (at grade), buildings shall be located no more than 5 feet from the sidewalk or sidewalk improvement, but shall not encroach on the public right-of-way;

c. building facades shall comprise at least 75% of the total pedestrian street frontage for a property and if applicable, at least 75% of the total pedestrian route frontage for a property;

d. minimum side setbacks of the underlying zoning are waived;

e. building facades of ground floor retail, general business service, and professional office land uses that front onto a pedestrian street or route shall include windows and overhead protection;

f. building facades along a pedestrian street or route, that are without ornamentation or are comprised of uninterrupted glass curtain walls or mirrored glass are not permitted; and

g. vehicle access shall be limited to the rear access alley or rear access street where such an alley or street exists.

3. Floor/lot area ratio shall not exceed 5:1, including the residential component of mixed use developments, but not including parking structures;

4. Building setback and height requirements may be waived, except for areas within fifty feet of the perimeter of any special district overlay area abutting an R-12 or lower density residential zone;

5. The landscaping requirements of K.C.C. 21A.16 may be waived if landscaping conforms to a special district overlay landscaping plan adopted as part of the area zoning. The overlay district landscaping plan shall include features addressing street trees, and other design amenities (e.g. landscaped plazas or parks);

6. On designated pedestrian streets, sidewalk width requirements shall be increased to a range of ten to twelve feet wide including sidewalk landscaping and other amenities. The sidewalk widths exceeding the amount required in the King County Road Standards may occur on private property adjoining the public street right-of-way; and

7. Off-street parking requirements K.C.C. 21A.18 are modified as follows for all nonresidential uses:

a. No less than one space for every 1000 square feet of floor area shall be provided;

b. No more than seventy-five percent of parking shall be on-site surface parking. Such parking shall be placed in the interior of the lot, or at the rear of the building it serves; and

c. At least twenty-five percent of the required parking shall be enclosed in an on-site parking structure or located at an off-site common parking facility, provided that this requirement is waived when the applicant signs a no protest agreement to participate in any improvement district for the future construction of such facilities. (Ord. 13022 § 30, 1998: Ord. 12823 § 4, 1997: Ord. 10870 § 578, 1993).

21A.38.060 Special district overlay - office/research park development.

A. The purpose of the office/research park special district overlay is to establish an area for development to occur in a campus setting with integrated building designs, flexible grouping of commercial and industrial uses, generous landscaping and buffering treatment, and coordinated auto and pedestrian circulation plans. Office/research park districts shall only be established in areas designated within a community plan and zoned RB, O or I zones. Permitted uses shall include all uses permitted in the RB, O and I

zones, as set forth in K.C.C. chapter 21A.08, regardless of the classification used as the underlying zone on a particular parcel of land.

B. The following development standards shall apply to uses locating in office/research park overlay districts:

1. All uses shall be conducted inside an entirely enclosed building;

2. An internal circulation plan shall be developed to facilitate pedestrian and vehicular traffic flow between major project phases and individual developments;

3. The standards in this section shall be applied to the development as a unified site, not withstanding any division of the
development site under a binding site plan or subdivision;

4. All buildings shall maintain a fifty-foot setback from perimeter streets and from rural area and residential zones;

5. The total permitted impervious lot coverage shall be eighty-percent. The remaining twenty-percent shall be devoted to open space. Open space may include all required landscaping, and any unbuildable critical areas and their associated buffers;

6. The landscaping standards in K.C.C. chapter 21A.16 are modified as follows:

a. Twenty-foot wide Type II landscaping shall be provided along exterior streets, and twenty-foot wide Type III landscaping shall be provided along interior streets;

b. Twenty-foot wide Type I landscaping shall be provided along property lines adjacent to rural area and residential zones;

c. Fifteen-foot wide Type II landscaping shall be provided along lines adjacent to nonresidential zoned areas; and

d. Type IV landscaping shall be provided within all surface parking lots as follows:

(1) Fifteen percent of the parking area, excluding required perimeter landscaping, shall be landscaped in parking lots with more than thirty-parking stalls;

(2) At least one tree for every four parking stalls shall be provided, to be reasonably distributed throughout the parking lot; and

(3) No parking stall shall be more than forty-feet from some landscaping;

e. An inventory of existing site vegetation shall be conducted pursuant to the procedures in K.C.C. chapter 21A.16, and

f. An overall landscaping plan that conforms to the requirements of this subsection shall be submitted for the entire district or each major development phase before the issuance of any site development, grading or building permits;

7. Lighting within an office/industrial park shall shield the light source from the direct view of surrounding residential areas;

8. Refuse collection/recycling areas and loading or delivery areas shall be located at least one hundred feet from residential areas and screened with a solid view obscuring barrier;

9. Off street parking standards as in K.C.C. chapter 21A.18 are modified as follows:

a. one space for every three hundred square feet of floor area shall be provided for all uses, except on-site daycare, exercise facilities, eating areas for employees, archive space for tenants and retail/service uses;

b. parking for on-site daycare, exercise facilities, eating areas for employees, archive space for tenants, and retail/service uses shall be no less than one space for every one thousand square feet of floor area and no greater than one space for every five hundred square feet of floor area; and

c. at least twenty-five percent of required parking shall be located in a parking structure; and

10. Sign standards in K.C.C. chapter 21A.20 are modified as follows:

a. Signs visible from the exterior of the park shall be limited to one monument office/research park identification sign at each entrance. The signs shall not exceed an area of sixty-four square feet per sign;

b. no pole signs shall be permitted; and

c. all other signs shall be visible only from within the park. (Ord. 17539 § 63, 2013: Ord. 15606 § 25, 2006: Ord.11621 § 100, 1994: Ord. 10870 § 579, 1993).

21A.38.070 Special district overlay - Urban Planned Development (UPD) purpose and designation.

A. The purpose of the UPD special district overlay is to provide a means for community, subarea or neighborhood plans to designate urban areas which are appropriate for development on a large scale basis:

B. In designating an overlay district, the comprehensive plan, subarea plan, neighborhood plan or area zoning shall delineate UPD overlay district boundaries.

C. The community plan, subarea plan, neighborhood plan; or area zoning shall designate and adopt urban residential zoning consistent with comprehensive plan policies.

D. In designating an overlay district, the community plan, subarea plan, neighborhood plan or area zoning may:

1. Set a maximum or range of the number of dwelling units within the UPD; and

2. Incorporate project description elements or requirements to the extent known, including but not limited to the following: conceptual site plan; mix of attached and detached housing; affordable housing goals and/or programs; major transportation or other major infrastructure programs and the UPD's participation therein; and any other provision or element deemed appropriate. (Ord. 12823 § 5, 1997: Ord. 10870 § 580, 1993).

21A.38.080 Special district overlay - UPD implementation. Implementation of the UPD designation shall comply with the following:

A. The minimum site size for an UPD permit application shall be not less than one hundred acres. "Site size" for purposes of this subsection means contiguous land under one ownership or under the control of a single legal entity responsible for submitting an UPD permit application and for carrying out all provisions of the development agreement; and

B. The UPD shall comply with the standards and procedures set out in K.C.C. chapter 21A.39. (Ord. 16267 § 73, 2008: Ord. 10870 § 581, 1993).

21A.38.090 Special district overlay - economic redevelopment.

A. The purpose of the economic redevelopment special district overlay is to provide incentives for the redevelopment of large existing, underutilized concentrations of commercial/industrial lands within urban areas.

B. The economic redevelopment special district overlay shall only be designated through the area zoning process; located in areas designated within a community, subarea or neighborhood plan as an activity center; and zoned CB, RB, O, or I.

C. The standards of this title and other county codes shall be applicable to development within the economic redevelopment special district overlay except as follows:

1. Commercial or industrial uses that exist within an area as of the effective date of legislation applying the economic redevelopment special district overlay, but that are not otherwise permitted by the zoning, shall be considered permitted uses upon only the lots that they occupied as of that date.

2. The minimum parking requirements of this title shall be reduced as follows:

a. The parking stall requirements are reduced 100 percent provided that:

(1) the square footage of any enlargement or replacement of an existing building does not in total exceed 125 percent of the square footage of the existing building;

(2) any new mixed use development provides a minimum of two stories of residences above the ground-floor level commercial;

(3) the building fronts on an existing roadway improved to urban standards or a roadway programmed to be improved to urban standards as a capital improvement project, that accommodates on-street parking; and

(4) there is no net decrease in existing off-street parking space.

b. the parking stall requirements for commercial and retail uses are reduced 50 percent if:

(1) the square footage of any enlargement or replacement of an existing building in total exceeds 125 percent of the square footage of the existing building;

(2) the height of the enlarged or replacement building does not exceed the base height of the zone in which it is located;

(3) the building fronts on an existing roadway improved to urban standards or a roadway programmed to be improved as a capital improvement project, that accommodates on-street parking; and

(4) there is no net decrease in existing off-street parking spaces, unless it exceeds the minimum requirements of subsection C.2.b.

3. The building height limits of this title shall be waived, provided that the height limit within 50 feet of the perimeter of the overlay district shall be 30 feet.

4. Signage shall be limited to that allowed within the CB zone.

5. The roadway improvements of the King County code shall be waived, provided a no-protest agreement to participate in future road improvement districts (RID) is signed by an applicant and recorded with the county.

6. On I zoned lands that are designated in the comprehensive plan as unincorporated activity centers, conditional use permits shall not be issued where the resulting impacts such as noise, smoke, odor and glare would be inconsistent with the maintenance of nearby viable commercial and residential areas.

D. For properties that have frontage on pedestrian street(s) or routes as designated in an applicable plan or area zoning process, the following conditions shall apply:

1. main building entrances shall be oriented to the pedestrian street. If multiple pedestrian streets front on the building, each pedestrian street shall have a similar main building entrance;

2. at the ground floor (at grade), buildings shall be located no more than 5 feet from the sidewalk or sidewalk improvement, but in no instance shall encroach on the public right-of-way;

3. building facades shall comprise at least 75% of the total pedestrian street frontage for a property, and if applicable, at least 75% of the total pedestrian route frontage for a property;

4. minimum side setbacks of the underlying zoning are waived;

5. building facades of ground floor retail, general business service, and professional office land uses, that front onto a pedestrian street or route shall include windows and overhead protection;

6. building facades, along a pedestrian street or route, that are without ornamentation, or are comprised of uninterrupted glass curtain walls or mirrored glass are not permitted; and

7. vehicle access shall be limited to the rear access alley or rear access street where such an alley or street exists. (Ord. 16267 § 74, 2008: Ord. 12823 § 6, 1997: Ord. 11566 § 1, 1994: 11351 § 1, 1994).

21A.38.100 Special district overlay - commercial/industrial.

A. The purpose of the commercial/industrial special district overlay is to accommodate and support existing commercial/industrial areas outside of activity centers by providing incentives for the redevelopment of underutilized commercial or industrial lands and by permitting a range of appropriate uses consistent with maintaining the quality of nearby residential areas.

B. The commercial/industrial special district overlay shall be designated only through the area zoning process and applied to areas substantially developed with a mix of commercial and light industrial uses and zoned CB, RB, O or I.

C. The standards of this title and other county codes shall be applicable to development within the commercial/industrial special district overlay except as follows:

1. Legally established commercial or industrial uses that exist within an area as of the effective date of legislation applying the commercial/industrial special district overlay, but that are not otherwise permitted by the zoning, shall be considered permitted uses upon only the lots that they occupied as of that date.

2. Permitted uses shall include those of the base and I zone, with the exception of the following:

a. any use permitted in the I zone requiring a conditional use permit;

b. auction houses;

c. livestock sales;

d. SIC Industry Group 201 (meat products);

e. SIC Industry Group 202 (dairy products);

f. SIC Industry Group 204 (grain mill products);

g. SIC Industry Group 207 (fats and oils);

h. motor vehicle and boat dealers;

i. SIC Major Group 24 (lumber and wood products, except furniture) except 2431 (millwork) and 2434 (wood kitchen cabinets);

j. SIC Industry Group 311 (leather tanning and finishing);

k. SIC Major Group 32 (stone, clay, glass and concrete products);

l. SIC Industry 3999 (manufacturing industries, not elsewhere classified) dressing of furs, fur stripping and pelts only;

m. SIC Industry 7534 (tire retreading);

n. SIC Major Group 02 (agricultural production--livestock and animal specialties);

o. SIC Industry 2951 (asphalt paving mixtures and blocks);

p. resource accessory uses;

q. outdoor storage of equipment or materials occupying more than twenty-five percent of the site associated with:

(1) SIC Major Group 15 (building construction--contractors and operative builders);

(2) SIC Major Group 16 (heavy construction other than building construction--contractors);

(3) SIC Major Group 17 (construction--special trade contractors); and

(4) SIC Industry 7312 (outdoor advertising services); and

r. interim recycling facilities on lots that directly abut properties outside of the district.

3. Use limitations of the base zone shall not apply to commercial/industrial accessory uses.

4. The minimum parking requirements of this title shall be reduced as follows, except that the reductions do not apply to new construction on vacant property or the vacant portions of partially-developed property where that construction is not an enlargement or replacement of an existing building:

a. the parking stall requirements are reduced one hundred percent, but only if:

(1) the square footage of any enlargement or replacement of an existing building does not in total exceed one hundred twenty-five percent of the square footage of the existing building;

(2) the building fronts on an existing roadway improved to urban standards or a roadway programmed to be improved to urban standards as a capital improvement project, that accommodates on-street parking; and

(3) there is no net decrease in existing off-street parking space; and

b. the parking stall requirements are reduced fifty percent, but only if:

(1) the square footage of any enlargement or replacement of an existing building in total exceeds one hundred twenty-five percent of the square footage of the existing building;

(2) the height of the enlarged or replacement building does not exceed the base height of the zone in which it is located;

(3) the building fronts on an existing roadway improved to urban standards or a roadway programmed to be improved to urban standards as a capital improvement project, that accommodates on-street parking; and

(4) there is no net decrease in existing off-street parking spaces, unless it exceeds the minimum requirements of subsection C.4.b.

5. The landscaping requirements of this title shall be waived, but only if:

a. street trees, installed and maintained by the adjacent property owner, shall be substituted in lieu of landscaping;

b.(1) except as otherwise provided in 4.b.(2) of this subsection, any portion of the overlay district that directly abuts properties outside of the district shall provide, along those portions, a landscape buffer area no less than fifty percent of that required by this title, and areas of a lot used for outdoor storage of equipment or materials shall be screened from adjacent R zone properties by use of no less than ten feet of Type 1 landscaping or a totally view obscuring fence or structure; and

(2) if required parking for a development proposal is located on properties outside of the district that directly abut the site, the landscape buffer required by 6.b.(1) of this subsection may be place on the perimeter of the properties on which the parking is located that abut other properties outside of this district.

6. The setback requirements of this title shall be waived, but only if:

a. setback widths along any street that is not an alley forming a boundary of the overlay district shall comply with this title; and

b. any portion of the overlay district that directly abuts properties outside of the district shall provide, along those portions, a setback no less than fifty percent of that required by this title.

7. The building height limits of this title shall be waived, except that the height limit within fifty feet of the perimeter of the overlay district shall be thirty feet.

8. Signage shall be limited to that allowed within the CB zone.

9. The roadway improvements of the King county Code shall be waived, but only if a no-protest agreement to participate in future road improvement districts (RID) is signed by an applicant and recorded with the county.

10. The pedestrian circulation requirements of this title shall be waived.

11. The impervious surface and lot coverage requirements of this title shall be waived.

D. For properties that have frontage on a pedestrian street or streets or route or routes as designated in an applicable plan or area zoning process, except for gasoline service stations (SIC 5541) and grocery stores (SIC 5411) that also sell gasoline, the following conditions shall apply:

1. Main building entrances shall be oriented to the pedestrian street;

2. At the ground floor (at grade), buildings shall be located no more than five feet from the sidewalk or sidewalk improvement, but in no instance shall encroach on the public right-of-way;

3. Building facades shall comprise at least seventy-five percent of the total pedestrian street frontage for a property, and if applicable, at least seventy-five percent of the total pedestrian route frontage for a property;

4. Minimum side setbacks of the underlying zoning are waived;

5. Building facades of ground floor retail, general business service, and professional office land uses, that front onto a pedestrian street or route shall include windows and overhead protection;

6. Building facades, along a pedestrian street or route, that are without ornamentation, or are comprised of uninterrupted glass curtain walls or mirrored glass are not permitted; and

7. Vehicle access shall be limited to the rear access alley or rear access street where such an alley or street exists. (Ord. 17191 § 1, 2011: Ord. 17037 § 1, 2011: Ord. 12823 § 7, 1997: Ord. 11567 § 1, 1994).

***Reviser's note: This section was amended by 17037, Section 1, and Ordinance 17191, Section 51, each without reference to the other. Both amendments are incorporated in the publication of this section under K.C.C. 1.02.090.**

21A.38.110 Special district overlay - fully contained community (FCC) purpose, designation, and implementation.

A. the purpose of the FCC special district overlay is to provide a means to designate a limited number of areas which are uniquely appropriate for conversion to urban development on a large scale basis.

B. In designating an overlay district, the Comprehensive Plan and area zoning shall:

1. Delineate FCC overlay district boundaries; and

2. Ensure that surrounding properties are classified with rural residential zoning consistent with community plan and comprehensive plan policies in order to restrict future urban development in the area solely to the FCC site.

C. In designating an overlay district, the Comprehensive Plan and area zoning may:

1. Set a maximum or range of the number of dwelling units within the FCC; and

2. Incorporate project description elements or requirements to the extent known, including but not limited to the following: conceptual site plan; mix of attached and detached housing; affordable housing goals and/or
(programs; major transportation or other major infrastructure programs and FCC's participation therein; any other provision or element deemed appropriate.

D. Implementation of the FCC shall be accomplished by complying with the standards and procedures set forth in 21A.39. (Ord. 12171 § 7, 1996).

21A.38.120 Special district overlay - wetland management areas.

A. The purpose of the wetland management area special overlay district is to provide a means to designate certain unique and outstanding wetlands when necessary

to protect their functions and values from the impacts created from geographic and hydrologic isolation and impervious surface.

B. the following development standards shall be applied in addition to all applicable requirements of K.C.C. chapter 21A.24 to development proposals located within a wetland management area district overlay:

1. All subdivisions and short subdivisions on residentially zoned properties that are identified in an adopted basin plan for impervious surface limitations, shall have a maximum impervious surface area of eight percent of the gross acreage of the plat. For areas that are not covered by an adopted basin plan, this limit shall apply to all residentially zoned lands located within the wetland management area. Distribution of the allowable impervious area among the platted lots shall be recorded on the face of the plat. Impervious surface of existing roads need not be counted towards the allowable impervious area. This condition may be modified by the director for the minimum necessary to accommodate unusual site access conditions;

2. All subdivisions and short subdivisions on properties identified in an adopted basin plan for clustering and setaside requirements shall be required to cluster away from wetlands or the axis of corridors along stream tributaries and identified swales connecting wetlands in order to minimize land disturbance and maximize distance from these sensitive features. At least sixty-five percent of affected portions of RA-zoned properties and at least fifty percent of all other affected portions of the property shall be left in native vegetation, preferably forest, and placed in a permanent open space tract. In the absence of a basin plan, these requirements shall apply to all lands containing or adjacent to a wetland, a stream tributary corridor or a swale connecting wetlands; and

3. Clearing and grading activity from October 1 through March 31 shall meet the provisions of K.C.C. 16.82.150D wherever not already applicable. (Ord. 13307 § 1, 1998: Ord. 12823 § 14, 1997: Ord. 12809 § 5, 1997).

21A.38.130 Special district overlay - agricultural production buffer.

A. The purpose of the agricultural production buffer special district overlay is to provide a buffer between agricultural and upslope residential land uses. An agricultural production buffer special district overlay shall only be established in areas adjacent to an agricultural production district and zoned RA.

B. The following development standard shall apply to residential subdivisions locating in an agricultural production buffer special district overlay: Lots shall be clustered in accordance with K.C.C. 21A.14.040 and at least seventy-five percent of a site shall remain as open space, unless greater lot area is required by the Seattle-King County department of public health. (Ord. 15032 § 50, 2004: Ord. 12823 § 8, 1997).

21A.38.140 Special district overlay - residential infill.

A. The purpose of the residential infill special district overlay is to require the consolidation of individual parcels as a single development project when a subdivision application of one or more acres is made. A residential infill district overlay shall only be established in areas zoned R-8.

B. The following development standards shall apply to uses locating in a residential infill district overlay:

1. Recreation and open space shall be sited adjacent to any existing utility right-of-way corridor(s) or recreation and open space wherever feasible; and

2. Pedestrian access shall be provided to adjacent utility right-of-way corridor(s) as found necessary by department staff. (Ord. 12823 § 9, 1997).

21A.38.150 Special district overlay - ground water protection.

A. The purpose of the ground water protection special district overlay is to limit land uses that have the potential to severely contaminate groundwater supplies and to provide increased areas of permeable surface to allow for infiltration of surface water into ground resources.

B. For all commercial and industrial development proposals, at least 40 percent of the site shall remain in natural vegetation or planted with landscaping, which area shall be used to maintain predevelopment infiltration rates for the entire site. For purposes of this special district overlay, the following shall be considered commercial and industrial land uses:

1. amusement/entertainment land uses as defined by K.C.C. 21A.08.040 except golf facilities;

2. general services land uses as defined by K.C.C. 21A.08.050 except health and educational services, daycare 1, churches, synagogues, and temples;

3. government/business services land uses as defined by K.C.C. 21A.08.060 except government services;

4. retail/wholesale land uses as defined by K.C.C. 21A.08.070 except forest product sales and agricultural product sales;

5. manufacturing land uses as defined by K.C.C. 21A.08.080; and,

6. mineral extraction and processing land uses as defined by K.C.C. 21A.08.090.

C. Permitted uses within the area of the ground water protection special district overlay shall be those permitted in the underlying zone, excluding the following as defined by Standard Industrial Classification number and type:

1. SIC 4581, airports, flying fields, and airport terminal services;

2. SIC 4953, refuse systems, (including landfills and garbage transfer stations operated by a public agency);

3. SIC 4952, sewerage systems (including wastewater treatment facilities); and

4. SIC 7996, amusement parks; SIC 7948, racing, including track operation; or other commercial establishments or enterprises involving large assemblages of people or automobiles except where excluded by section B above;

5. SIC 0752, animal boarding and kennel services;

6. SIC 1721, building painting services;

7. SIC 3260, pottery and related products manufacturing;

8. SIC 3599, machine shop services;

9. SIC 3732, boat building and repairing;

10. SIC 3993, electric and neon sign manufacturing;

11. SIC 4226, automobile storage services;

12. SIC 7334, blueprinting and photocopying services;

13. SIC 7534, tire retreading and repair services;

14. SIC 7542, car washes;

15. SIC 8731, commercial, physical and biological research laboratory services;

16. SIC 02, interim agricultural crop production and livestock quarters or grazing on properties 5 acres or larger in size;

17. SIC 0752, public agency animal control facility;

18. SIC 2230, 2260, textile dyeing;

19. SIC 2269, 2299, textile and textile goods finishing;

20. SIC 2700, printing and publishing industries;

21. SIC 2834, pharmaceuticals manufacturing;

22. SIC 2844, cosmetics, perfumes and toiletries manufacturing;

23. SIC 2893, printing ink manufacturing;

24. SIC 3000, rubber products fabrication;

25. SIC 3111, leather tanning and finishing;

26. SIC 3400, metal products manufacturing and fabrication;
27. SIC 3471, metal electroplating;
28. SIC 3691, 3692, battery rebuilding and manufacturing;
29. SIC 3711, automobile manufacturing; and
30. SIC 4600, petroleum pipeline operations. (Ord. 12823 § 10, 1997).

21A.38.160 Special district overlay - aviation facilities.

A. The purpose of the aviation facilities special district overlay is to protect existing non-commercial airports from encroaching residential development. An aviation facilities special district overlay shall only be established in the area up to 1/4 mile around airports and shall be zoned UR or RA.

B. The following development standards shall apply to uses locating in aviation facilities special overlay districts:

On the title of all properties within pending short subdivisions or subdivisions and binding site plans, the following statement shall be recorded and be shown to all prospective buyers of lots or homes:

"This property is located near the (name of airport) which is recognized as a legitimate land use by King County. Air traffic in this area, whether at current or increased levels, is consistent with King County land use policies provided it conforms to all applicable state and federal laws." (Ord. 12823 § 11, 1997).

21A.38.170 Special district overlay - urban aquifer protection area.

A. The purpose of the urban aquifer protection area special district overlay is to provide additional protection for urban areas that are highly susceptible to ground water contamination. An urban aquifer protection area special district overlay shall only be established within areas designated in the comprehensive plan as highly susceptible to ground water contamination, including the surrounding area up to 1/2 mile, and zoned UR, R, NB, CB, O, and I.

B. Permitted uses shall be those permitted in the underlying zone, excluding the following as defined by Standard Industrial Classification (SIC) number and type:

1. SIC 4953, refuse systems (including hazardous waste recycling or treatment and solid waste landfills);
2. SIC 461, pipelines, except natural gas (including petroleum pipelines); and
3. businesses maintaining open storage of toxic substances.

C. New septic tank drainfield systems shall be prohibited. (Ord. 12823 § 12, 1997).

21A.38.180 Special district overlay - highway-oriented development.

A. The purpose of the highway-oriented development special district overlay is to ensure the compatibility of highway-oriented land uses adjacent to rural residential and resource land uses. A highway-oriented special district overlay shall only be established along existing or former state or U.S. highway route corridors and zoned RA, UR, NB, RB or I.

B. Except in the RB zone at highway interchanges, permitted uses in the RA, UR, NB, RB or I zones shall be those in the underlying zone, excluding the following as defined by Standard Industrial Classification (SIC) number and type:

1. SIC 5812, eating places; and
2. SIC 5813, drinking places.

C. Permitted uses in the RB zone at highway interchanges shall be limited to the following highway oriented commercial services for the traveling public, as defined by Standard Industrial Classification (SIC) number and type:

1. SIC 5411, grocery stores (including convenience stores);

2. SIC 5541, gasoline service stations;
3. SIC 5812, eating places; and
4. SIC 7011, hotels and motels.

D. The following development standards shall apply to uses located in highway-oriented overlay districts:

1. Business signs are limited to those allowed in the NB zone classification. Ground supported signs shall not exceed five feet in height.

2. Natural vegetation shall be retained wherever possible, and landscaping shall be used for screening. The following commercial screening matrix shall be applied where NB, RB and I zoned properties, and properties with potential NB, RB or I zoning, have common boundaries with rural or resource zoned lands. The purpose of this is to allow for adequate buffering between commercial or industrial and rural land uses.

Commercial Screening Matrix

	Commercial Property Zoning		
Adjacent Property Zoning	NB Neighborhood Business	RB Regional Business	I Industrial
RA (Rural Area)	Type I Buffer 30' Depth	Type I Buffer 30' Depth	Type I Buffer 50' Depth
F (Forest) A (Agricultural)	Type I Buffer 30' Depth	Type I Buffer 50' Depth	Type I Buffer 50' Depth

3. Primary vehicular access shall be from a principal arterial road. Secondary vehicular access shall be from a collector arterial road.

4. At the time of site plan review, the county may require additional right-of-way dedication to provide new roadways.

5. Utilities in RB zones shall be placed underground.

6. All uses shall be evaluated for impacts to ground water quality. (Ord. 12823 § 13, 1997).

21A.38.200 Special district overlay - erosion hazards near sensitive water bodies.

A. The purpose of the erosion hazards near sensitive water bodies special overlay district is to provide a means to designate sloped areas posing erosion hazards which drain directly to lakes or streams of high resource value which are particularly sensitive to the impacts of increased erosion and the resulting sediment loads from development.

B. The following development standards shall be applied in addition to all applicable requirements of K.C.C. 21A.24 to development proposals located within erosion hazards near a sensitive water bodies district overlay:

1. A no-disturbance area shall be established on the sloped portion of the special district overlay to prevent damage from erosion. Land clearing or development shall not occur in the no-disturbance area, except for the clearing activities listed in subsection a. Clearing activities listed in subsection a shall only be permitted if they meet the requirements of subsection b.

a. Clearing activities may be permitted as follows:

i. for the construction of single family residences on pre-existing separate lots;

ii. for the construction of utility corridors to service existing development along existing rights-of-way including any vacated portions of otherwise contiguous rights-of-way;

iii. for the construction of roads providing sole access to buildable property and associated utility facilities within those roadways; or

iv. for the construction of development within an isolated no-disturbance area of two acres or less in size. The isolated no-disturbance area is either geologically separated from other no-disturbance areas or lies completely within a separate drainage subbasin and is, therefore, hydrologically isolated from the rest of the no-disturbance area.

b. The clearing activities listed in subsection *a*. may be permitted only if the following requirements are met:

i. a report which meets the requirements of K.C.C. 21A.24.120 shall show that the clearing activities will not subject the area to risk of landslide or erosion and that the purpose of the no-disturbance area is not compromised in any way;

ii. the clearing activities shall be mitigated, monitored and bonded consistent with the mitigation requirements applicable to sensitive areas regulated in K.C.C. 21A.24;

iii. the clearing activities are limited to the minimal area and duration necessary for construction; and

iv. the clearing activities are consistent with K.C.C. 21A.24.

2. The upslope boundary of the no-disturbance area lies at the first obvious break in slope from the upland plateau over onto the steep valley walls. The downslope boundary of this zone includes those areas designated as erosion or landslide hazard areas pursuant to K.C.C. 21A.24.220 and 21A.24.280. The sensitive areas folio indicates the general location of these hazard areas, but it cannot be used to specify the areas' precise boundaries. Maps of the approximate boundaries of these no-disturbance zones shall be available at the department. Single family or multi-family residential density from the no-disturbance area may be reallocated onto any buildable portion of the site pursuant to K.C.C. 21A.12.080, or transferred to other sites pursuant to K.C.C. 21A.36;

3. New development proposals for sites which drained predeveloped runoff to the no-disturbance zone shall evaluate the suitability of onsite soils for infiltration. All runoff from newly constructed impervious surfaces shall be retained on-site unless this requirement precludes the ability to meet minimum density requirements in K.C.C. 21A.12. When minimum density cannot be met, runoff shall be retained on-site as follows:

a. Infiltration of all site runoff shall be required in granular soils as defined in the King County Surface Water Design Manual.

b. Infiltration of downspouts shall be required in granular soils and in soil conditions defined as allowable in the Surface Water Design Manual when feasible to fit the required trench lengths onsite;

c. When infiltration of downspouts is not feasible, downspout dispersion trenches shall be required when minimum flow paths defined in the Surface Water Design Manual can be met onsite or into adjacent open space; and

d. When dispersion of downspouts is not feasible, downspouts shall be connected to the drainage system via perforated pipe.

4. For the portions of proposed subdivisions, short subdivisions and binding site plans that cannot infiltrate runoff up to the 100-year peak flow, at least 25 percent shall remain undisturbed and set aside in an open space tract consistent with K.C.C. 21A.24.150-180; and

5. For the portions of all development proposals that cannot infiltrate runoff up to the 100-year peak flow, no more than 35 percent of the gross site area shall be covered by impervious surfaces. For new subdivisions and short subdivisions, maximum lot coverage should be specified for subsequent residential building permits on individual lots.

6. If the application of this section would deny all reasonable use of property, the applicant may apply for a reasonable use exception pursuant to K.C.C. 21A.24.070B.

7. The director may modify the property specific development standards required by B.1 through B.5 of this section, when a development proposal complies with the following:

a. The proposed development is subject to public/private partnerships such as an approved community block grant or other such water quality program designed to improve water quality in the basin,

b. The proposed development is designated by King County, in consultation with the Lake Sammamish Management Committee, as a demonstration project designed to implement best management practices and state of the art technology that assures the greatest possible improvement to water quality, and

c. A site specific study is conducted by the applicant and approved by the director, which demonstrates that the proposed development substantially increases water quality by showing the following:

(1) water quality on-site is improved;

(2) the development project will not subject downstream channels to increased risk of landslide or erosion;

(3) the development project will not subject the nearest sensitive water body to additional erosion hazards; and

(4) the project is consistent with element a. and b. above, and provides predictable improvements to the water quality of Lake Sammamish. (Ord. 12823 § 15, 1997).

21A.38.210 Special district overlay - heron habitat protection area.

A. The purpose of the heron habitat protection area special district overlay is to provide a means to designate areas that provide essential feeding, nesting and roosting habitat for identified great blue heron rookeries. A district overlay will usually contain several isolated areas of known heron habitat in the general region surrounding the heron rookery.

B. The following development standards shall be applied in addition to all applicable requirements of K.C.C. chapter 21A.24 and Title 25 to development proposals located within a heron habitat protection area district overlay:

1. The following conditions shall apply to the wetland or along the main channel of the stream riparian zone containing the heron rookery (tributary streams are excluded):

a. The one-hundred-year floodplain shall be left undisturbed. Development proposals on individual lots shall require the one-hundred-year floodplain to retain the native vegetation and be placed in a county-approved conservation easement or notice shall be placed on the title of the lot. The notice shall be approved by King County and filed with the records and licensing services division. The notice shall inform the public of the presence and location of the floodplain and heron habitat on the property and that limitations on actions in or affecting the area exist. Subdivisions, short subdivisions and binding site plans shall require the one-hundred-year floodplain to retain the native vegetation and be placed in a critical areas tract, to be dedicated to the homeowner's association or other legal entity that assumes maintenance and protection of the tract. Determination of the floodplain shall be done for each permit application based on actual field survey using county-approved floodplain elevations;

b. There shall be a six-hundred-sixty-foot radius buffer maintained around the periphery of the great blue heron rookery. If the critical areas and buffers are not adequate to provide the radius, then the buffer shall be expanded to meet the requirement. A rookery and its buffer shall be designated as critical area tract, easement or noticed on title as required in this subsection; and

c. All access shall be restricted under nest trees from February 15 to July 31 and noted on signage at the floodplain or buffer edge, whichever is further from the

rookery. Access may be further restricted with fencing or dense plantings with native plant material approved by the county. All developments in R-12 or higher density zones shall restrict access and provide an interpretive sign that provides information about the stream or wetland and its wildlife, biological, and hydrological functions. All signs shall be consistent with critical area signage requirements and subject to review and approval of the county;

2. Subdivisions, short subdivisions, binding site plans, site development permits or other commercial or multifamily permits adjacent to stream reaches and wetlands designated on the heron habitat protection area district overlay map, shall provide buffers that are fifty feet greater than required pursuant to K.C.C. chapter 21A.24 along those streams and wetlands to provide habitat for herons. This additional fifty-foot buffer shall be planted with dense native plant material to discourage human intrusion into feeding or nesting and roosting areas. Plantings shall be reviewed and approved by the department. If conformance with the additional buffer requirement results in an unbuildable lot, then the minimum variation necessary to accommodate the proposed development shall be determined in consultation with county biologists and be reviewed and approved by the department;

3. Along the shoreline of lakes and river corridors included in the heron habitat protection area, all subdivisions, short subdivisions, binding site plans, site development permits or other commercial or multifamily permits shall provide a fifty-foot buffer in addition to required shoreline setbacks of K.C.C. Title 25 and chapter 21A.24. Along the shoreline of the major rivers (Sammamish, Green, Cedar, Snoqualmie, Snohomish, Skykomish and White rivers), the setback requirement may be waived if a special wildlife study shows no great blue heron nesting, roosting and feeding areas on the site. These studies shall be done by a wildlife biologist and approved by county biologists. This additional fifty-foot buffer shall be planted with dense native plant material to discourage human intrusion into feeding or nesting and roosting areas. Plantings shall be reviewed and approved by the department; and

4. New docks, piers, bulkheads and boat ramps constructed within the heron habitat protection area shall mitigate for loss of heron feeding habitat by providing enhanced native vegetation approved by the county adjacent to the development or between the development and the shoreline. Bulkheads shall be buffered from the water's edge by enhanced plantings of native vegetation approved by the county. (Ord. 15971 § 99, 2007: Ord. 15606 § 26, 2006: Ord. 12823 § 16, 1997).

21A.38.240 Special district overlay - floodplain density.

A. The purpose of the floodplain density special district overlay is to provide a means to designate areas that cannot accommodate additional density due to severe flooding problems. This district overlay limits development in critical areas to reduce potential future flooding.

B. The following development standards shall be applied to all development proposals on RA-5 zoned parcels located within a floodplain density special district overlay:

1. Density is limited to one home per ten acres for any property that is located within a critical area; and

2. All development shall be clustered outside of the identified critical areas, unless the entire parcel is a mapped critical area. (Ord. 15606 § 27, 2006: Ord. 12823 § 19, 1997).

21A.38.260 Special district overlay - Fall City business district.

A. The purpose of the Fall City business district special district overlay is to allow commercial development in Fall City to occur with on-site septic systems until such time

as an alternative wastewater system is available. The special district shall only be established in areas of Fall City zoned CB and shall be evaluated to determine if it is applicable to other rural commercial centers.

B. The standards of this title and other county codes shall be applicable to development within the Fall City business district special district overlay except as follows:

1. The permitted uses in K.C.C. Chapter 21A.08 do not apply and are replaced with the following:

a. Residential land uses as set forth in K.C.C. 21A.08.030:

i. As a permitted use:

(A) Multifamily residential units shall only be allowed on the upper floors of buildings; and

(B) Home occupations under K.C.C. chapter 21A.30;

ii. As a conditional use:

(A) Bed and Breakfast (five rooms maximum); and

(B) Hotel/Motel.

b. Recreational/cultural land uses as set forth in K.C.C. 21A.08.030:

i. As a permitted use:

(A) Library;

(B) Museum; and

(C) Arboretum.

ii. As a conditional use:

(A) Sports Club/Fitness Center;

(B) Amusement/Recreation Services/Arcades (Indoor);

(C) Bowling Center

c. General services land uses as set forth in K.C.C. 21A.08.050:

i. As a permitted use:

(A) General Personal Services, except escort services;

(B) Funeral Home;

(C) Appliance/Equipment Repair;

(D) Medical or Dental Office/Outpatient Clinic;

(E) Medical or Dental Lab;

(F) Day Care I;

(G) Day Care II;

(H) Veterinary Clinic;

(I) Social Services;

(J) Animal Specialty Services;

(K) Artist Studios;

(L) Nursing and Personal Care Facilities;

ii. As a conditional use:

(A) Theater (Movie or Live Performance);

(B) Religious Use;

d. Government/Business services land uses as set forth in K.C.C. 21A.08.060:

i. As a permitted use:

(A) General Business Service;

(B) Professional Office: Bank, Credit Union, Insurance Office.

ii. As a conditional use:

(A) Public Agency or Utility Office;

(B) Police Substation;

(C) Fire Station;

(D) Utility Facility;

(E) Self Service Storage;

e. Retail/commercial land uses as set forth in K.C.C. 21A.08.070:

i. As a permitted use on the ground floor:

(A) Food Store;

(B) Drug Store/Pharmacy;

(C) Retail Store: includes florist, book store, apparel and accessories store, furniture/home furnishings store, antique/recycled goods store, sporting goods store, video store, art supply store, hobby store, jewelry store, toy store, game store, photo store, electronic/appliance store, fabric shops, pet shops, and other retail stores (excluding adult-only retail);

(D) Eating and Drinking Places, including coffee shops and bakeries.

ii. As a conditional use:

(A) Liquor Store or Retail Store Selling Alcohol;

(B) Hardware/Building Supply Store;

(C) Nursery/Garden Center;

(D) Department Store;

(E) Auto Dealers (indoor sales rooms only);

f. Manufacturing land uses as set forth in K.C.C. 21A.08.080 are not allowed.

g. Resource land uses as set forth in K.C.C. 21A.08.090:

i. As a permitted use:

(A) Solar photovoltaic/solar thermal energy systems;

(B) Private storm water management facilities;

(C) Growing and Harvesting Crops (within rear/internal side yards or roof gardens, and with organic methods only);

(D) Raising Livestock and Small Animals (per the requirements of Section 21A.30 of the Zoning Code)

ii. As a conditional use: Wind Turbines

h. Regional land uses as set forth in K.C.C. 21A.08.100 with a special use permit: Communication Facility.

2. The densities and dimensions set forth in K.C.C. chapter 21A.12 apply, except as follows:

a. Residential density is limited to six dwelling units per acre. For any building with more than ten dwelling units, at least ten percent of the dwelling units shall be classified as affordable under 21A.34.040F.1;

b. Buildings are limited to two floors, plus an optional basement;

c. The elevation of the ground floor may be elevated a maximum of six feet above the average grade of the site along the front facade of the building;

d. If the ground floor is designed to accommodate non-residential uses, the elevation of the ground floor should be placed near the elevation of the sidewalk to minimize the need for stairs and ADA ramps;

e. If the ground floor is designed to accommodate non-residential space, the height of the ceiling, as measured from finished floor, shall be no more than eighteen feet;

f. Building height shall not exceed forty feet, as measured from the average grade of the site along the front facade of the building. (Ord. 14785 § 43, 2012).

21A.39 GENERAL PROVISIONS - URBAN PLANNED DEVELOPMENTS

Sections:

21A.39.010 Urban Planned Development (UPD) permit - Purpose.
21A.39.020 UPD permit - application and review process.
21A.39.030 PD permit - conditions of approval.
21A.39.040 UPD permit - Development agreement.
21A.39.050 UPD standards - Land uses.
21A.39.060 UPD standards - Affordable housing.

21A.39.070 UPD standards - On-site recreation.
21A.39.080 UPD standards - Transportation, road and school adequacy.
21A.39.090 UPD standards - Water and sewer service.
21A.39.100 UPD standards - Road design.
21A.39.110 UPD standards - Storm water management design.
21A.39.120 UPD standards - Applicability of other zoning code provisions.
21A.39.130 Latecomer agreements and fair share.
21A.39.200 Fully contained community (FCC) - Permit.

21A.39.010 Urban Planned Development (UPD) permit - Purpose. The purpose of the urban planned development (UPD) permit process and standards set out in this chapter is to:

A. Establish the UPD permit as the mechanism for standardized and consolidated review to implement a UPD;

B. Establish conditions for the UPD to be complied with by all subsequent land use approvals implementing the UPD;

C. Coordinate infrastructure and project phasing to the adequacy of public services;

D. Implement open space protection specifically tailored to the UPD;

E. Establish a specific range and intensity of land uses for the UPD, tailored to fit the site; and

F. Provide diversity in housing types and affordability within UPDs.

G. Promote site design that it supports and encourage the use of transit. (Ord. 10870 § 582, 1993).

21A.39.020 UPD permit - application and review process.

A. King County shall accept an application for an UPD permit only in areas designated urban by the comprehensive plan and contained within the boundaries of UPD Special District Overlays designated by a community plan or comprehensive plan, provided that density transfer from adjacent rural lands is allowed as provided for in K.C.C. chapter 21A.36.

B. A UPD permit application, or modifications of an approved UPD permit that requires council review, shall be reviewed pursuant to the hearing examiner process outlined in K.C.C. chapter 21A.42, provided that:

1. the review of the UPD permit application shall not be completed until applicable sewer and/or water comprehensive utility plans or plan amendments are identified;

2. A UPD permit may be processed concurrently with any application for a subsequent development approval implementing the UPD permit.

C. A processing memorandum of understanding (MOU) shall be adopted containing any of the following elements:

1. Schedule for processing including timelines for EIS, drainage master plan, UPD permit hearings, plats or other permits or approvals;

2. Budget for permit processing and review;

3. Establishment of a core UPD review team with one representative from each county department having a principal UPD permit review role. The department responsible for coordinating review of the UPD shall enter into memorandums of understanding with other county departments specifying special tasks and timetables consistent with the schedule for performance by each department and/or independent consulting;

4. Retention of a third-party facilitator at the applicant's cost to assist the county's review;

5. Establishment of baseline monitoring requirements and design parameters that are to apply under existing law during the UPD application and review process;

6. Final scope for EIS, that shall be adjusted for adopted county substantive environmental or mitigation requirements that will apply to the UPD permit such as K.C.C. chapter 21A.24, the SWM Manual, road and school adequacy standards, impact fee or mitigation programs or other adopted standards.

D. The processing MOU shall be completed initially within ninety days after the request by a UPD permit applicant, unless the county and applicant agree to a different time. If the county and applicant have not reached agreement within ninety days, then either may request final resolution of the processing MOU by a committee consisting of the directors of the departments of transportation, permitting and environmental review, and natural resources and parks;

E. The county shall prepare a UPD application form consistent with the information required under K.C.C. 21A.39.030, that shall take into account that detailed information that may not be available at the time of the application will be developed through the environmental impact statement and review process. (Ord. 17420 § 117, 2012: Ord. 15606 § 28, 2006: Ord. 14199 § 238, 2001: Ord. 11621 § 101, 1994: Ord. 10870 § 583, 1993).

21A.39.030 UPD permit - conditions of approval.

A. In approving a UPD permit, conditions of approval shall at a minimum establish:

1. A site plan for the entire UPD showing locations of critical areas and buffers, required open spaces, UPD perimeter buffers, location and range of densities for residential development and location and size of nonresidential development;

2. The expected buildout time period for the entire project and the various phases;

3. Project phasing and other project-specific conditions to mitigate impacts on the environment, on public facilities and services including transportation, utilities, drainage, police and fire protection, schools and parks;

4. Affordable housing requirements;

5. Road and storm water design standards that shall apply to the various phases of the project;

6. Bulk design and dimensional standards that shall be implemented throughout subsequent development within the UPD;

7. The size and range of uses authorized for any nonresidential development within the UPD;

8. The minimum and maximum number of residential units for the UPD; and

9. Any or both sewer and water comprehensive utility plans or amendments required to be completed before development can occur; and

10. Provisions for the applicant's surrender of an approved UPD permit before commencement of construction or cessation of UPD development based upon causes beyond the applicant's control or other circumstances, with the property to develop thereafter under the base zoning in effect prior to the UPD permit approval.

B. A UPD permit and development agreement may allow development standards different from those otherwise imposed under the King County Code, including, but not limited to, K.C.C. 21A.39.050, 21A.39.060, 21A.39.070, 21A.39.080, 21A.39.090, 21A.39.100, 21A.39.110 and 21A.39.120, in order to provide flexibility to achieve public benefits, respond to changing community needs, and encourage modifications that provide the functional equivalent or adequately achieve the purposes of county standards. Any approved development standards that differ from those in the King County Code shall not require any further zoning reclassification, variance from King County standards or other county approval apart from the UPD permit approval. The development

standards as approved through the UPD permit and development agreement shall apply to and govern the development and implementation of each UPD site in lieu of any conflicting or different standards or requirements elsewhere in the King County Code.

C. Subsequently adopted standards that differ from those of the UPD permit shall apply to the UPD only where necessary to address imminent public health and safety hazards or where the UPD permit specifies a time period or phase after which certain identified standards can be modified. Determination of the appropriate standards for future phases that are not fully defined during the initial approval process may be postponed. Building permit applications shall be subject to the building codes in effect when the permit is applied for.

D. An approved UPD permit, including site plan elements or conditions of approval, may be amended or modified at the request of the applicant or the applicant's successor in interest designated by the applicant in writing. The director may administratively approve minor modifications to an approved UPD permit. Modifications that do not qualify as minor shall be deemed major modifications and shall be reviewed in the same manner as that in K.C.C. 21A.39.020 for new UPD permit applications. Any increase in the total number of dwelling units in a UPD above the maximum number in the approved UPD permit, or any decrease in the minimum density for residential areas of the UPD (exclusive of roads and critical areas), shall be deemed major modifications. The county through the development agreement for an approved UPD may specify additional criteria for determining whether proposed modifications are major or minor.

E. Unless otherwise provided for through the UPD permit approval, and subject to any appropriate credits for fees paid or facilities provided by the UPD, applicable impact fee payment requirements shall be those that are in effect when subsequent implementing approvals such as subdivision applications, binding site plans, building permits or other approvals are applied for. (Ord. 15606 § 29, 2006: Ord. 11700 § 43, 1995: Ord. 10870 § 584, 1993).

21A.39.040 UPD permit - Development agreement. The conditions of UPD permit approval shall be attached to a development agreement that is:

A. Signed by King County executive and all property owners within the UPD in a form acceptable to King County.

B. Binding on all property owners and their successors to develop a UPD only in accordance with the conditions of the UPD permit, but subject to surrender or cessation of the UPD permit and development as provided in 21A.39.030A.10.

C. Recorded with King County division of records prior to the effective date of the UPD permit or any development proposal which was submitted and reviewed concurrently with the UPD permit application. (Ord. 10870 § 585, 1993).

21A.39.050 UPD standards - Land uses.

A. Except as required by subsections B and C, a UPD may contain any non-residential use set out in the K.C.C. 21A.08 (Land Use Tables) when approved as part of the UPD permit. Any non-residential use shall be subject to any applicable UPD conditions contained in the development agreement that limits the scope or intensity of such use.

B. The primary land use shall be residential and shall be provided as follows:

1. the base density of the UPD shall be that of the zone set for the site were it to not develop with a UPD, applied to the entire site including portions proposed for nonresidential uses.

2. the minimum density of the UPD shall be not less than the minimum residential density of the underlying zoning calculated for the portion of the site to be used for residential purposes, pursuant to the methodology outlined in K.C.C. 21A.12, and

3. the maximum density of the UPD shall be determined by the council in the UPD permit, subject to any maximum density set out in the community plan or comprehensive plan which designated the UPD special district overlay.

C. UPDs shall at a minimum:

1. provide retail/commercial areas at a rate of one acre per 2500 projected UPD residents, or

2. demonstrate that existing or potential commercial development within one quarter mile of UPD boundaries will meet the convenience shopping needs of UPD residents. (Ord. 11621 § 102, 1994: Ord. 10870 § 586, 1993).

21A.39.060 UPD standards - Affordable housing.

A. Exclusive of dwelling units from the density bonus provisions, at least 30 percent of the residential units in each phase shall be affordable housing units defined and allocated as follows:

1. Ten percent of the affordable housing units shall be affordable to households at an income level:

a. below 80 percent of the median household income for ownership units, and/or

b. below 50 percent of the median household income for rental units.

c. housing affordable for households at this level of median income will be required in any phase only if publicly funded or private non-profit programs for such housing are available, provided that the developer sets aside sufficient land for a period of up to five years. That period shall begin with approval of the final plat for each subdivision containing any land set aside for low income housing. If during that period, programs become available, the developer shall cooperate with the public agency or private non-profit for the development of such housing.

d. if housing funds do not become available by the end of the five year period the land shall be released for other development consistent with the UPD. The overall requirement for units available to below 80 or 50 percent of median income households, whichever is applicable, shall be reduced by the number for which the five year period has elapsed and the overall requirement for units available to households between 80 to less than 100 percent (ownership units) or 50 to less than 80 percent (rental units) of median income shall be increased by the same number.

2. Ten percent of the affordable housing units shall be affordable to households at an income level:

a. between 80 and less than 100 percent of the median household income for ownership units, and/or

b. between 50 and less than 80 percent of the median household income for rental units;

3. Ten percent of the affordable housing units shall be affordable to households at an income level:

a. between 100 and 120 percent of the median household income for ownership units; and/or

b. between 80 and 100 percent of the median household income for rental units; and

4. The formula for determining median income for King County and affordable monthly housing payments based on a percentage of this income shall be determined at the time of the UPD permit approval.

B. The affordable housing units that are owner-occupied shall be resale restricted to same income group (based on typical underwriting ratios and other lending standards) for 15 years from date of first sale. Renter occupied units shall be restricted for thirty

years to ensure continuing affordability for households of the applicable income level. (Ord. 10870 § 587, 1993).

21A.39.070 UPD standards - On-site recreation. The UPD shall provide the amount of on-site recreation required pursuant to K.C.C. 21A.14. (Ord. 10870 § 588, 1993).

21A.39.080 UPD standards - Transportation, road and school adequacy.

A. Transportation, and school adequacy impacts relative to the standards set forth in K.C.C. 21A.28 shall be evaluated based on complete development of the total site area in the UPD permit application.

B. Required facility construction and dedication and other mitigation measures may be phased in conjunction with subsequent land use approvals consistent with their proportion of the total project impacts. (Ord. 10870 § 589, 1993).

21A.39.090 UPD standards - Water and sewer service.

A. All UPDs shall be served with public water and sewer systems that:

1. Comply with applicable comprehensive utility plans, and

2. Are in place at the time said service is needed for the UPD or any completed phase thereof.

B. The UPD shall provide all on-site and off-site improvements and additions to water and sewer facilities required to support the UPD, at the expense of the UPD, which may include developer extension agreements (latecomer provision), LIDs or other capital facility financing. (Ord. 10870 § 590, 1993).

21A.39.100 UPD standards - Road design. The road design standards applied to subsequent land use actions which implement the UPD shall be such standards in effect at the time of UPD permit approval, except when new standards are specifically determined by the King County council to be necessary for public safety. (Ord. 10870 § 591, 1993).

21A.39.110 UPD standards - Storm water management design. The SWM design standards in effect at the time of UPD permit approval shall be applied to subsequent land use actions which implement the UPD except when new standards are specifically determined by the King County council to be necessary for public safety. (Ord. 10870 § 592, 1993).

21A.39.120 UPD standards - Applicability of other zoning code provisions.

A. Except as may be specified in the UPD permit conditions, all developments and uses on the UPD site proposed subsequent to the UPD permit approval shall comply with all the other applicable provisions of this title.

B. Except as may be otherwise specified in the UPD permit conditions the development standards for the UPD shall be as follows:

1. Individual residential subareas shall use the standards of the zone that is closest in density to the proposed subarea development; and

2. Commercial or industrial uses shall be subject to the standards of CB zone. (Ord. 10870 § 593, 1993).

21A.39.130 Latecomer agreements and fair share. If the UPD provides more than its fair share contribution, to infrastructure improvements or public services including but not limited to roads, sewers, water, fire, police, schools or park and recreation

facilities, then the UPD shall receive latecomer fees, offsets, credits, reductions, or other adjustments to reflect the UPD's fair share obligations. (Ord. 10870 § 594, 1993).

21A.39.200 Fully contained community (FCC) - Permit.

A. King County shall accept an application for a FCC permit only in areas designated as a FCC by the Comprehensive Plan and contained within the boundaries of a FCC special district overlay designated by the area zoning implementing the Comprehensive Plan.

B. In order to be approved, a proposed FCC permit shall comply with the provisions relating to urban planned development permits in King County Code 21A.39.020B and C and 21A.39.030 through 21A.39.130, except that a proposed FCC shall comply with the following additional standards:

1. New infrastructure (including transportation and utilities infrastructure) is provided for and impact fees are established and imposed on the FCC consistent with the requirements of RCW 82.02.050;

2. Transit-oriented site planning and traffic demand management programs are implemented in the FCC. Pedestrian, bicycle, and high occupancy vehicle facilities are given high priority in design and management of the FCC;

3. Buffers are provided between the FCC and adjacent urban and low-density residential development. Buffers located on the perimeter boundaries of the FCC delineated boundaries, consisting of either landscaped areas with native vegetation or natural areas, shall be provided and maintained to reduce impacts on adjacent lands;

4. A mix of uses is provided to offer jobs, housing, and services to the residents of the new FCC. No particular percentage formula for the mix of uses is required. Instead, the mix of uses for an FCC shall be evaluated on a case-by-case basis, in light of the geography, market demand area, transportation patterns, and other relevant factors affecting the proposed FCC. Service uses in the FCC may also serve residents outside the FCC, where appropriate;

5. Affordable housing is provided within the new FCC for a broad range of income levels, including housing affordable by households with income levels below and near the median income for King County;

6. Environmental protection has been addressed and provided for in the new FCC, at levels at least equivalent to those imposed by adopted King County environmental regulations;

7. Development regulations are established to ensure urban growth will not occur in adjacent nonurban areas. Such regulations shall include but are not limited to rural zoning of adjacent rural areas, urban planned development permit conditions requiring sizing of FCC water and sewer systems so as to ensure urban growth will not occur in adjacent nonurban areas; and/or urban planned development permit conditions prohibiting connection by property owners in the adjacent rural area (excepting public school sites) to new FCC sewer and water mains or lines;

8. Provision is made to mitigate impacts of the FCC on designated agricultural lands, forest lands, and mineral resource lands; and

9. The plan for the new FCC is consistent with the development regulations established for the protection of critical areas of king County pursuant to RCW 36.70A.170.

C. If an applicant utilizes the procedural provisions of this section of King County Code 21A.39, any previously submitted urban planned development permit applications are deemed the equivalent of and accepted as complete applications for a FCC permit under this chapter.

D. If the Comprehensive Plan designates more than one FCC site within a FCC area, the FCC applications may be submitted and reviewed independently unless a

combined review is requested by the owners of the proposed FCC sites. If FCC permits on adjoining properties within the designated FCC area are considered in combined review, then the applicants can request that the criteria specified in K.C.C. 21A.39.200 be applied to the combined area and uses within the two adjoining fee permit sites. In applying the FCC criteria of K.C.C. 21A.39.200 B to an FCC permit, the county shall consider the uses and other characteristics of any existing FCC permit on an adjoining site within the FCC area.

E. Approved urban planned developments. Any approved urban planned development can proceed with development consistent with the terms of the recorded development agreement or, at the owner's election, may request king County to review and issue an FCC permit. The additional review process shall follow the processing requirements for a FCC but would incorporate the prior urban planned development permit file and prior proceedings and would be limited to determining whether there is a basis for the additional findings and conclusions necessary for a FCC permit beyond those required for an urban planned development. (Ord. 12171 § 8, 1996).

21A.40 APPLICATION REQUIREMENTS/NOTICE METHODS

Sections:

21A.40.070 Applications - Limitations on refiling of applications.

21A.40.070 Applications - Limitations on refiling of applications. Upon denial by the council of a zone reclassification or a special use permit, no new application for substantially the same proposal shall be accepted within one year from the date of denial. (Ord. 10870 § 602, 1993).

21A.41 COMMERCIAL SITE DEVELOPMENT PERMITS

Sections:

21A.41.010 Purpose.
21A.41.020 Applicability.
21A.41.050 Public comments.
21A.41.060 Application of development standards.
21A.41.070 Approval.
21A.41.080 Financial guarantees.
21A.41.100 Limitation of permit approval.
21A.41.110 Modification to an approved permit.
21A.41.120 Administrative rules.

21A.41.010 Purpose. The purpose of this chapter is to establish an optional comprehensive site review process of proposed commercial development resulting in a permit which can combine any or all of the following:

A. Site development requirements specified prior to building and/or grading permit applications.

B. Site review and application of rules and regulations generally applied to the whole site without regard to existing or proposed internal lot lines.

C. Site development coordination and project phasing occurring over a period of years.

D. Evaluation of commercially and industrially zoned property for the creation or alteration of lots when reviewed concurrently with a binding site plan application. (Ord. 11621 § 120, 1994).

21A.41.020 Applicability.

A. An application for commercial site development permit may be submitted for commercial development projects on sites consisting of one (1) or more contiguous lots legally created and zoned to permit the proposed uses.

B. A commercial site development permit is separate from and does not replace other required permits such as conditional use permits or shoreline substantial development permits. A commercial site development permit may be combined and reviewed concurrently with other permits. (Ord. 11621 § 121, 1994).

21A.41.050 Public comments. All public comments shall be in writing and signed, shall reference the proposed commercial site development permit application, and shall include the full name, address and telephone number of the person commenting. All comments shall be received within the designated comment period. The designated comment period shall commence on the day following publication or posting of the application notice and shall terminate at 4:30 p.m. on the fifteenth (15th) day thereafter. If the department determines that application notice shall be published as well as posted, the department shall make every attempt to have the comment periods run concurrently. If, however, more than one method of notification is used, the termination date shall be calculated from the last notification date. If the fifteenth (15th) day is a non-work day for the county, the designated comment period shall cease at 4:30 p.m. on the next county work day immediately following the fifteenth (15th) day. (Ord. 11621 § 124, 1994).

21A.41.060 Application of development standards. An application for commercial site development permit shall be reviewed pursuant to chapter 43.21C RCW, SEPA as implemented by WAC 197-11; K.C.C. 9.04, Surface Water Management; K.C.C. 14.42, Road Standards; K.C.C. 16.82, Grading; K.C.C. Title 17, Fire Code; K.C.C. 20.44, County Environmental Procedures; K.C.C. Title 21A, Zoning; K.C.C. Title 25, Shoreline Management; administrative rules adopted pursuant to K.C.C. 2.98 to implement any such code or ordinance provision; King County board of health rules and regulations; county approved utility comprehensive plans; conformity with applicable P-suffix conditions.

Lot-based standards, such as internal circulation, landscaping signage and setback requirements, are typically applied to each individual lot within the site. However, the director may approve an application for commercial site development where such standards have been applied to the site as if it consisted of one parcel. Lot-based regulations shall not be waived altogether.

The director may modify lot-based or lot line requirements contained within the building, fire and other similar uniform codes adopted by the county, provided the site is being reviewed concurrently with a binding site plan application. (Ord. 13022 § 31, 1998: Ord. 11621 § 125, 1994).

21A.41.070 Approval.

A. The director may approve, deny, or approve with conditions an application for a commercial site development. The decision shall be based on the following factors:

1. Conformity with adopted county and state rules and regulations in effect on the date the complete application was filed, including but not limited to those listed in section 21A.41.060.

2. Consideration of the recommendations or comments of interested parties and those agencies having pertinent expertise or jurisdiction, consistent with the requirements of this title.

B. Subsequent permits for the subject site shall be issued only in compliance with the approved commercial site development plan. Additional site development conditions and site review will not be required for subsequent permits provided the approved plan is not altered.

C. Approval of the proposed commercial site development shall not provide the applicant with a vested right to build without regard to subsequent changes in the building and fire codes listed in K.C.C. 16.04 and 17.04 regulating construction.

D. The director shall mail a copy of the decision to the applicant and any other person who has presented written comment to the department. (Ord. 11621 § 126, 1994).

21A.41.080 Financial guarantees. Performance guarantees consistent with the provisions of Title 27A may be required to assure that development occurs according to the approved plan. (Ord. 12020 § 55, 1995: Ord. 11621 § 127, 1994).

21A.41.100 Limitation of permit approval.

A. A commercial site development permit approved without a phasing plan shall be null and void if the applicant fails to file a complete building permit application(s) for all buildings within three years of the approval date, or by a date specified by the director; and fails to have all valid building permits issued within four years of the commercial site development permit approval date; or

B. A commercial site development permit approved with a phasing plan shall be null and void if the applicant fails to meet the conditions and time schedules specified in the approved phasing plan. (Ord. 11621 § 129, 1994).

21A.41.110 Modification to an approved permit.

A. A subsequent building permit application may contain minor modifications to an approved commercial site development plan if the modification does not:

1. Increase the building floor area by more than 10%;
2. Increase the number of dwelling units;
3. Increase the total impervious surface area, provided that, relocatable facilities for schools shall be exempt from this restriction; does not result in an insufficient amount of parking and/or loading;
4. Locate buildings outside an approved building envelope, provided that, relocatable facilities for schools shall be exempt from this restriction;
5. Change the number of ingress and egress points to the site;
6. Significantly increase the traffic impacts of peak hour trips to and from the site; or
7. Significantly increase the quantity of imported or exported materials or increase the area of site disturbance.

B. Modifications that exceed the conditions of approval as stated in this section and require a new review as determined by the director shall only be accomplished by applying for a new commercial site development permit for the entire site. The new application shall be reviewed according to the laws and rules in effect at the time of application. (Ord. 17191 § 52, 2011: Ord. 11621 § 130, 1994).

21A.41.120 Administrative rules. The director may promulgate administrative rules and regulations pursuant to K.C.C. 2.98, to implement the provisions and requirements of this chapter. (Ord. 11621 § 131, 1994).

21A.42 REVIEW PROCEDURES/NOTICE REQUIREMENTS

Sections:

21A.42.030 Code compliance review — decisions and appeals.
21A.42.040 Director review — actions subject to review.
21A.42.080 Director review — decision regarding development proposal — rules.
21A.42.090 Director review — decision final unless appealed.
21A.42.100 Examiner review — zone reclassification, shoreline environment redesignation, urban plan developments, special use permits, amendment or deletion of P-suffix conditions, plat vacations and short plat vacations.
21A.42.110 Combined review.
21A.42.130 Records.
21A.42.140 Review process for high schools.
21A.42.150 Modifications and expansions of uses or developments authorized by existing land use permits - Permits defined.
21A.42.160 Modifications or expansions of uses or developments authorized by existing land use permits - When use now permitted outright.
21A.42.170 Modifications or expansions of uses authorized by existing land use permits - Required findings.
21A.42.180 Modifications and expansions - use or development authorized by an existing planned unit development approval.
21A.42.190 Modifications and expansions - uses or development authorized by existing conditional use, special use or unclassified use permits.
21A.42.210 Expansions and modification - school authorized by an existing land use permit.

21A.42.030 Code compliance review — decisions and appeals.

A. The department shall approve, approve with conditions, or deny development proposals based on compliance with this title and any other development condition affecting the proposal.

B. K.C.C. chapter 20.20 applies to appeals of decisions on development proposals. (Ord. 15051 § 219, 2004: Ord. 10870 § 611, 1993).

21A.42.040 Director review — actions subject to review. The following actions shall be subject to the director review procedures in this chapter:

A. Applications for variances, exceptions under K.C.C. 21A.24.070, and conditional uses; and

B. Periodic review of mineral extraction operations. (Ord. 15051 § 220, 2004: Ord. 12196 § 55, 1996: Ord. 11621 § 105, 1994: Ord. 10870 § 612, 1993).

21A.42.080 Director review — decision regarding development proposal — rules.

A. Decisions regarding the approval or denial of development proposals, excluding periodic review of mineral extraction operations, subject to director review shall be based upon compliance with the required showings of K.C.C. chapter 21A.44. Periodic reviews of mineral extraction operations shall be based upon the criteria outlined in K.C.C. 21A.22.050.B.

B. The written decision contained in the record shall show:

1. Facts, findings and conclusions supporting the decision and demonstrating compliance with the applicable decision criteria; and

2. Any conditions and limitations imposed, if the request is granted.

C. The director shall mail a copy of the written decision to the applicant and to all parties of record.

D. the director shall adopt rules for the transaction of business and shall keep a public record of his actions, finding, waivers and determinations. (Ord. 15051 § 221, 2004: Ord. 12196 § 56, 1996: Ord. 10870 § 616, 1993).

21A.42.090 Director review - decision final unless appealed.

A. The decision of the director shall be final unless the applicant or an aggrieved party files an appeal to the hearing examiner under K.C.C. chapter 20.24.

B. The examiner shall review and make decisions based upon information contained in the written appeal and the record.

C. The examiner's decision may affirm, modify, or reverse the decision of the director.

D. As provided by K.C.C. 20.24.210A and C:

1. The examiner shall render a decision within ten days of the closing of hearing; and

2. The decision shall be final unless appealed under K.C.C. 20.24.240.B.

E. Establishment of any use or activity authorized under K.C.C. 21A.24.070 or under a conditional use permit or variance shall occur within four years of the effective date of the decision. For schools this period shall be five years. This period may be extended for one additional year by the director if the applicant has submitted the applications necessary to establish the use or activity and has provided written justification for the extension.

F. For the purpose of this section, "establishment" shall occur upon the issuance of all local permits or approvals for on-site improvements needed to begin the authorized use or activity, if the conditions or improvements required by the permits are completed within the required timeframes.

G. Once a use, activity or improvement allowed under K.C.C. 21A.24.070 or by a conditional use permit or variance has been established, it may continue as long as all conditions of permit issuance are met. (Ord. 17841 § 56, 2014: Ord. 12196 § 57, 1996: Ord. 11940 § 1, 1995: Ord. 10870 § 617, 1993).

21A.42.100 Examiner review — zone reclassifications, shoreline environment redesignation, urban plan developments, special use permits, amendment or deletion of P-suffix conditions, plat vacations and short plat vacations. Applications for zone reclassifications, shoreline environment redesignation, special use permits, urban plan developments, amendment or deletion of P-suffix conditions, plat vacations and short plat vacations shall be reviewed by the department subject to the criteria in K.C.C. chapter 21A.44 and to the procedures and criteria in K.C.C. chapter 20.24 for action subject to approval by the council and notice shall be provided in accordance with K.C.C. chapter 20.20. (Ord. 15051 § 222, 2004: Ord. 11621 § 106, 1994: Ord. 10870 § 618, 1993).

21A.42.110 Combined review. Proposed actions may be combined for review purposes with any other action subject to the same review process, provided:

A. Notice requirements for combined review shall not be less than the greatest individual action requirement; and

B. No permit shall be approved without prior review and approval of any required variance. (Ord. 10870 § 619, 1993).

21A.42.130 Records. The department shall maintain public records for all permit approvals and denials containing the following information:

A. Application documents;

B. Tape recorded verbatim records of required public hearing;

C. Written recommendations and decisions for proposed actions;

D. Ordinances showing final council actions;

E. Evidence of notice;

F. Written comments received; and

G. Material submitted as exhibits. (Ord. 10870 § 621, 1993).

21A.42.140 Review process for high schools.

A. The School District shall hold a public hearing on the request for a building permit on the proposed high school and may merge the public hearing for environmental review with this hearing. The hearing shall address the proposal's compliance with the applicable development standards and whether the impacts of traffic on the neighborhood have been addressed pursuant to the State Environmental Policy Act, Chapter 43.21C RCW, and/or through the payment of road impact fees. The hearing may be conducted by the Board of Directors, or where authorized by board policy, by a hearing examiner appointed by the School Board. The District shall provide notice of the hearing as follows:

1. by posting the property;

2. by publishing in a newspaper of general circulation in the general area where the proposed high school is located;

3. by sending notices by first class mail to owners of property in an area within five hundred feet of the proposed high school, but the area shall be expanded as necessary to send mailed notices to at least twenty different property owners; and

4. by sending notices to other residents of the District that have requested notice.

B. At a regularly scheduled or special Board meeting, the Board of Directors shall adopt findings of compliance with applicable King County development standards, including the decision criteria outlined in K.C.C. chapter 21A.44, or adopt proposed actions necessary to reach compliance. If a hearing examiner has been appointed, the Board of Directors shall review and adopt or reject the hearing examiner's proposed findings and/or proposed actions. The board may include in the record any information supporting its findings or any information from prior public meetings held on the same general subject at the discretion of the Board.

C. Copies of the findings and/or the proposed actions shall be mailed to all parties of record and to the county.

D. Any aggrieved party of record may request the Board of Directors to reconsider the findings within twenty calendar days of its adoption. An aggrieved party requesting reconsideration shall submit written evidence challenging the findings or otherwise specifically identify reasons why the District has failed to reasonably comply with the applicable King County development standards or the decision criteria outlined in K.C.C. chapter 21A.44. Within thirty calendar days after a request for reconsideration has been filed with the District, the Board of Directors may reconsider and revise the findings and/or proposed actions, or may decline to reconsider. Failure to act, or to initiate the process for reconsideration by notifying the aggrieved party of record of intent to reconsider, within the thirty day period shall be deemed to constitute a decision not to reconsider.

E. The Board's final findings shall be attached to the District's building permit application and shall be considered as prima facie evidence of compliance with the

applicable King County development standards. (Ord. 14045 § 57, 2001: Ord. 10870 § 634 (part), 1993).

21A.42.150 Modifications and expansions of uses or developments authorized by existing land use permits - Permits defined. For the purposes of this chapter, a land use permit shall mean a conditional use permit, special use permit, unclassified use permit, or planned unit development. (Ord. 13130 § 7, 1998).

21A.42.160 Modifications or expansions of uses or developments authorized by existing land use permits - When use now permitted outright. Proposed modifications or expansions to a use or development authorized by an existing land use permit shall not require an amendment to the existing land use permit if the use is now permitted outright in the zone district in which it is located and shall not require findings pursuant to K.C.C. 21A.42.170. (Ord. 13130 § 8, 1998).

21A.42.170 Modifications or expansions of uses authorized by existing land use permits - Required findings. Modifications or expansions approved by the department shall be based on written findings that the proposed modifications or expansions provide the same level of protection for and compatibility with adjacent land uses as the original land use permit.(Ord. 13130 § 9, 1998).

21A.42.180 Modifications and expansions - use or development authorized by an existing planned unit development approval. Modifications and expansions of uses or developments authorized by an existing planned unit development approval shall be subject to the following provisions.

A. Any approved modification or expansion shall be recorded.

B. Modifications to building location or dimensions shall be reviewed pursuant to the code compliance process of this chapter unless:

1. Buildings are located closer to the nearest property line(s); or
2. An increase in square footage of buildings is proposed.

C. Modifications not exempted from the code compliance process of this chapter by subsection B. of this section and all expansions shall be subject to the approval of a conditional use permit. (Ord. 17191 § 53, 2011: Ord. 13130 § 10, 1998).

21A.42.190 Modifications and expansions - uses or development authorized by existing conditional use, special use or unclassified use permits.

A. The department may review and approve, in accordance with the code compliance process of this chapter, an expansion of a use or development authorized by an existing conditional use, special use or unclassified use permit as follows:

1. The expansion shall conform to this title and the original land use permit, except that the project-wide amount of each of the following may be increased up to ten percent:

a. building square footage;
b. impervious surface;
c. parking; or
d. building height;

2. No subsequent expansions shall be approved under this subsection if the cumulative amount of such expansions exceeds the percentage prescribed in subsection A.1. of this section; and

3. An expansion of a use or development authorized by an existing conditional use, special use or unclassified use permit that does not conform to subsection A.1. of this section may only be approved if:

a. the expansion is within a use or development authorized by an existing conditional use permit and is reviewed and approved as a conditional use; or

b. the expansion is within a use or development authorized by an existing special use or unclassified use permit and is reviewed and approved as a special use.

B. The department may review and approve, in accordance with the code compliance process of this chapter, a modification of a use or a development authorized by an existing conditional use, special use or unclassified use permit that does not make a substantial change, as determined by the department, to the conditional use, special use or unclassified use. For the purpose of this subsection, a "substantial change" includes, but is not limited to, a change to the conditions of approval that leads to significant built or natural environmental impacts that were not addressed in the original approval or the creation of a new use.

C. This section shall not apply to modifications or expansions of:

1. Telecommunication facilities under K.C.C. 21A.26.140;

2. Minor telecommunication facilities under K.C.C. 21A.27.090; or

3. Nonconformances under K.C.C. 21A.32.065. (Ord. 17841 § 57, 2014: Ord. 17191 § 54, 2011: Ord. 15606 § 30, 2006: Ord. 13130 § 11, 1998).

21A.42.210 Expansions and modification - school authorized by an existing land use permit. In the RA zone, the following apply to the expansion or modification of a school authorized by an existing land use permit:

A. Pursuant to the code compliance process of this chapter, the department may review and approve an expansion or modification of an elementary school authorized by an existing land use permit even if the use is not permitted outright in the RA zone. Such expansions or modifications shall conform to all other provisions of this title;

B. Pursuant to the code compliance process of this chapter, the department may review and approve an expansion of a middle school, junior high school or high school authorized by an existing land use permit even if the use is not permitted outright in the RA zone. Such expansions shall conform to all other provisions of this title. Any expansions under this subsection shall be subject to the following:

1. the project-wide amount of each of the following may be increased by up to ten percent:

a. building square footage;

b. impervious surface;

c. parking; and

d. building height; and

2. No subsequent expansions shall be approved under this subsection if the cumulative amount of such expansions exceeds the percentage prescribed in subsection B.1. of this section;

C. An expansion of a school that does not conform to the provisions of subsection B. of this section may only be approved if the expansion is reviewed and approved as a conditional use; and

D. The department may review and approve, in accordance with the code compliance process of this chapter, a modification of a middle school, junior high school or high school authorized by an existing land use permit that does not make a substantial change to the existing land use permit, as determined by the department. For the purpose of this subsection, a "substantial change" includes, but is not limited to, a change to the conditions of approval that leads to significant built or natural environmental impacts that were not addressed in the original approval. (Ord. 17485 § 44, 2012).

21A.43 IMPACT FEES

Sections:

21A.43.005 Authority.
21A.43.010 Purpose.
21A.43.020 Impact fee program elements.
21A.43.030 Fee calculations.
21A.43.040 Fee collection.
21A.43.050 Assessment of impact fees.
21A.43.060 Effective date.
21A.43.070 Adjustments, exceptions, and appeals.
21A.43.080 Exemption or reduction for low or moderate income housing.
21A.43.090 Impact fee accounts and refunds.

21A.43.005 Authority. The provisions of this chapter for the assessment and collection of impact fees are adopted pursuant to Chapter 82.02 RCW. (Ord. 11621 § 109, 1994).

21A.43.010 Purpose. The purpose of this chapter is to implement the capital facilities element of the Comprehensive Plan and the Growth Management Act by:

A. Ensuring that adequate public school facilities and improvements are available to serve new development;

B. Establishing standards whereby new development pays a proportionate share of the cost for public school facilities needed to serve such new development;

C. Ensuring that school impact fees are imposed through established procedures and criteria so that specific developments do not pay arbitrary fees or duplicative fees for the same impact; and

D. Providing needed funding for growth-related school improvements to meet the future growth needs of King County. (Ord. 11621 § 110, 1994).

21A.43.020 Impact fee program elements.

A. Impact fees will be assessed on every new dwelling unit in the district for which a fee schedule has been established.

B. Impact fees will be imposed on a district-by-district basis, on behalf of any school district which provides to the county a capital facilities plan, the district's standards of service for the various grade spans, estimates of the cost of providing needed facilities and other capital improvements, and the data from the district called for by the formula in K.C.C. 21A.43.030. The actual fee schedule for the district will be adopted by ordinance based on this information and the fee calculation set out for K.C.C. 21A.43.030. Any impact fee imposed shall be reasonably related to the impact caused by the development and shall not exceed a proportionate share of the cost of system improvements that are reasonably related to the development. The impact fee formula shall account in the fee calculation for future revenues the district will receive from the development. The ordinance adopting the fee schedule shall specify under what circumstances the fee may be adjusted in the interests of fairness.

C. The impact fee shall be based on a capital facilities plan developed by the district and approved by the school board, and adopted by reference by the county as part of the capital facilities element of the comprehensive plan for the purpose of establishing the fee program. (Ord. 11621 § 111, 1994).

21A.43.030 Fee calculations.

A. The fee for each district shall be calculated based on the formula set out in Attachment A to Ordinance 11621*.

B. Separate fees shall be calculated for single family and multi-family residential units and separate student generation rates must be determined by the district for each type of residential unit. For purposes of this chapter single family units shall mean single detached dwelling units, and multi-family units shall mean townhouses and apartments.

C. The fee shall be calculated on a district-by-district basis using the appropriate factors and data to be supplied by the district, as indicated in Attachment A to Ordinance 11621*. The fee calculations shall be made on a district-wide basis to assure maximum utilization of all school facilities in the district used currently or within the last two years for instructional purposes.

D. The formula in Attachment A to Ordinance 11621* also provides a credit for the anticipated tax contributions that would be made by the development based on historical levels of voter support for bond issues in the school district.

E. The formula in Attachment A to Ordinance 11621* also provides for a credit for school facilities or sites actually provided by a developer which the school district finds to be acceptable. (Ord. 13338 § 15, 1998: Ord. 12148 § 1, 1996: Ord. 11621 § 112, 1994).

***Available in the King County Archives.**

21A.43.040 Fee collection. Fees shall be collected by the department of permitting and environmental review and maintained in a separate account for each school district, pursuant to K.C.C. 21A.43.070. Fees shall be paid to the district pursuant to administrative rules of an interlocal agreement between the county and the district. (Ord. 17420 § 118, 2012: Ord. 11621 § 113, 1994).

21A.43.050 Assessment of impact fees.

A. In school districts where impact fees have been adopted by county ordinance and except as provided in K.C.C. 21A.43.080, the county shall collect impact fees, based on the schedules set forth in each ordinance establishing the fee to be collected for the district, from any applicant seeking development approval from the county where such development activity requires final plat, PUD or UPD approval or the issuance of a residential building permit or a mobile home permit and the fee for the lot or unit has not been previously paid. No approval shall be granted and no permit shall be issued until the required school impact fees set forth in the district's impact fee schedule contained in K.C.C. Title 27 have been paid.

B. For a plat, PUD or UPD applied for on or after the effective date of the ordinance adopting the fee for the district in question receiving final approval, fifty percent of the impact fees due on the plat, PUD or UPD shall be assessed and collected from the applicant at the time of final approval, using the impact fee schedules in effect when the plat, PUD or UPD was approved. The balance of the assessed fee shall be allocated to the dwelling units in the project, and shall be collected when the building permits are issued. Residential developments proposed for short plats shall be governed by subsection D of this section.

C. If on the effective date of an ordinance adopting an impact fee for a district, a plat, PUD or UPD has already received preliminary approval, such plat, PUD or UPD shall not be required to pay fifty percent (50%) of the impact fees at the time of final approval, but the impact fees shall be assessed and collected from the lot owner at the time the building permits are issued, using the impact fee schedules in effect at the time of building permit application. If on the effective date of a district's ordinance, an applicant has applied for preliminary plat, PUD or UPD approval, but has not yet received such

approval, the applicant shall follow the procedures set forth in subsection B of this section.

D. For existing lots or lots not covered by subsection B of this section, application for single family and multifamily residential building permits, mobile home permits, and site plan approval for mobile home parks, the total amount of the impact fees shall be assessed and collected from the applicant when the building permit is issued, using the impact fee schedules in effect at the time of permit application.

E. Notwithstanding the provisions of this section, any application for preliminary plat, PUD or UPD approval submitted before January 22, 1991, shall not be required to pay school impact fees at the time of final plat, PUD or UPD approval. However, where the county has adopted a fee ordinance for the district, the full impact fee in effect when the building permits were applied for shall be paid by such developments at the time the building permits are issued if the applications for the building permits are submitted after January 22, 1991.

F. Any application for preliminary plat, PUD or UPD approval or multifamily zoning which has been approved subject to conditions requiring the payment of impact fees established pursuant to this chapter, shall be required to pay the fee in accordance with the condition of approval. (Ord. 11621 § 114, 1994).

21A.43.060 Effective Date. As of September 10, 1993, no fee shall be assessed or collected on any pending building permit which had been applied for prior to the effective date of the impact fee. (Ord. 11621 § 115, 1994).

21A.43.070 Adjustments, exceptions, and appeals.

A. The following are excluded from the application of the impact fees:

1. Any form of housing exclusively for the senior citizen, including nursing homes and retirement centers, so long as these uses are maintained;

2. Reconstruction, remodeling, or replacement of existing dwelling units which does not result in additional new dwelling units. In the case of replacement of a dwelling, a complete application for a building permit must be submitted within three years after it has been removed or destroyed;

3. Shelters for temporary placement, relocation facilities, transitional housing facilities and Community Residential Facilities as defined in K.C.C. 21A.06.220;

4. Any development activity that is exempt from the payment of an impact fee pursuant to RCW 82.02.100, due to mitigation of the same system improvement under the State Environmental Policy Act;

5. Any development activity for which school impacts have been mitigated pursuant to a condition of plat, PUD or UPD approval to pay fees, dedicate land or construct or improve school facilities, unless the condition of the plat, PUD or UPD approval provides otherwise; provided that the condition of the plat, PUD or UPD approval predates the effective date of a school district's fee implementing ordinance;

6. Any development activity for which school impacts have been mitigated pursuant to a voluntary agreement entered into with a school district to pay fees, dedicate land or construct or improve school facilities, unless the terms of the voluntary agreement provide otherwise; provided that the agreement predates the effective date of a school district's fee implementing ordinance;

7. Housing units which fully qualify as housing for persons age 55 and over meeting the requirements of the Federal Housing Amendments Act of 1988, 42 U.S.C. 3607(b)(2)(c) and (b)(3), as subsequently amended, and which have recorded covenants or other legal arrangements precluding school-aged children as residents in those units;

8. Mobile homes permitted as temporary dwellings pursuant to K.C.C. 21A.32.170; and

9. Accessory dwelling units as defined in K.C.C. 21A.06.350 and K.C.C. 21A.08.030B.7.a.

B. Arrangement may be made for later payment with the approval of the school district only if the district determines that it will be unable to use or will not need the payment until a later time, provided that sufficient security, as defined by the district, is provided to assure payment. Security shall be made to and held by the school district, which will be responsible for tracking and documenting the security interest.

C. The fee amount established in the schedule shall be reduced by the amount of any payment previously made for the lot or development activity in question, either as a condition of approval or pursuant to a voluntary agreement with a school district entered into after the effective date of a school district's fee implementing ordinance.

D. After the effective date of a school district's fee implementing ordinance, whenever a development is granted approval subject to a condition that the developer actually provide school sites, school facilities, or improvements to school facilities acceptable to the district, or whenever the developer has agreed, pursuant to the terms of a voluntary agreement with the school district, to provide land, provide school facilities, or make improvements to existing facilities, the developer shall be entitled to a credit for the value of the land or actual cost of construction against the fee that would be chargeable under the formula provided by this chapter. The land value or cost of construction shall be estimated at the time of approval, but must be documented. If construction costs are estimated, the documentation shall be confirmed after the construction is completed to assure that an accurate credit amount is provided. If the land value or construction costs are less than the calculated fee amount, the difference remaining shall be chargeable as a school impact fee.

E. Impact fees may be adjusted by the county, at the county's discretion, if one of the following circumstances exist, provided that the discount set forth in the fee formula fails to adjust for the error in the calculation or fails to ameliorate for the unfairness of the fee:

1. The developer demonstrates that an impact fee assessment was incorrectly calculated; or

2. Unusual circumstances identified by the developer demonstrate that if the standard impact fee amount was applied to the development, it would be unfair or unjust.

F. A developer may provide studies and data to demonstrate that any particular factor used by the district may not be appropriately applied to the development proposal, but the district's data shall be presumed valid unless clearly demonstrated to be otherwise by the proponent.

G. Any appeal of the decision of the director or the hearing examiner with regard to imposition of an impact for or fee amounts shall follow the appeal process for the underlying permit and not be subject to a separate appeal process. Where no other administrative appeal process is available, an appeal may be taken to the hearing examiner using the appeal procedures for variances. Any errors in the formula identified as a result of an appeal should be referred to the council for possible modification.

H. Impact fees may be paid under protest in order to obtain a building permit or other approval of development activity, when an appeal is filed. (Ord. 12148 § 2, 1996: Ord. 11621 § 116, 1994).

21A.43.080 Exemption or reduction for low or moderate income housing.

A. Low or moderate income housing projects being developed by public housing agencies or private non-profit housing developers shall be exempt from the payment of school impact fees. The amount of the school impact fees not collected from low or moderate income household development shall be paid from public funds other than

impact fee accounts. The impact fees for these units shall be considered paid for by the district through its other funding sources, without the district actually transferring funds from its other funding sources into the impact fee account. The planning and community development division shall review proposed developments of low or moderate income housing by such public or non-profit developers pursuant to criteria and procedures adopted by administrative rule, and shall advise the department of permitting and environmental review as to whether the project qualifies for the exemption.

B. Private developers who dedicate residential units for occupancy by low or moderate income households may apply to the division for reductions in school impact fees pursuant to the criteria established for public housing agencies and private non-profit housing developers pursuant to subsection A, and subject to the provisions of subsection A. The division shall review proposed developments of low or moderate income housing by such private developers pursuant to criteria and procedures adopted by administrative rule, and shall advise the department of permitting and environmental review as to whether the project qualifies for the exemption. If the division recommends the exemption, the department of permitting and environmental review shall reduce the calculated school impact fee for the development by an amount that is proportionate to the number of units in the development that satisfy the adopted criteria.

C. Individual low or moderate income home purchasers (as defined pursuant to the King County Comprehensive Housing Affordability Strategy (CHAS) who are purchasing homes at prices within their eligibility limits based on standard lending criteria and meet other means tests established by rule by the division are exempted from payment of the impact fee, provided that at such time as the property in question is transferred to another owner who does not qualify for the exemption, at which time the fee shall be due and payable.

D. The division is hereby instructed and authorized to adopt, pursuant to K.C.C. Chapter 2.98, administrative rules to implement this section. Such rules shall provide for the administration of this program and shall:

1. Encourage the construction of housing for low or moderate income households by public housing agencies or private non-profit housing developers participating in publicly sponsored or subsidized housing programs;

2. Encourage the construction in private developments of housing units for low or moderate income households that are in addition to units required by another housing program or development condition;

3. Ensure that housing that qualifies as low or moderate cost meets appropriate standards regarding household income, rent levels or sale prices, location, number of units and development size; and

4. Ensure that developers who obtain an exemption from or reduction of school impact fees will in fact build the proposed low or moderate cost housing and make it available to low or moderate income households for a minimum of fifteen (15) years.

5. Ensure that individual low or moderate income purchasers meet appropriate eligibility standards based on income and other financial means tests.

E. As a condition of receiving an exemption under paragraph B or C, the owner must execute and record a county-drafted lien, covenant, and/or other contractual provision against the property for a period of ten (10) years for individual owners, and fifteen (15) years for private developers, guaranteeing that the proposed development will continue to be used for low or moderate income housing. In the event that the pattern of development or the use of the development is no longer for low or moderate income housing, then the owner shall pay the impact fee amount from which the owner or any prior owner was exempt. The lien, covenant, or other contractual provision shall run with the land and apply to subsequent owners. (Ord. 17420 § 119, 2012: Ord. 11621 § 117, 1994).

21A.43.090 Impact fee accounts and refunds.

A. Impact fee receipts shall be earmarked specifically and retained in a special interest-bearing account established by the county solely for the district's school impact fees. All interest shall be retained in the account and expended for the purpose or purposes identified in subsection B. of this section. Annually, the county, based in part on the report submitted by the district under K.C.C. 21A.28.152 shall prepare a report on each impact fee account showing the source and amount of all moneys collected, earned or received, and capital or system improvements that were financed in whole or in part by impact fees.

B. Impact fees for the district's system improvements shall be expended by the district for capital improvements including but not limited to school planning, land acquisition, site improvements, necessary off-site improvements, construction, engineering, architectural, permitting, financing, and administrative expenses, relocatable facilities, capital equipment pertaining to educational facilities, and any other expenses which could be capitalized, and which are consistent with the school district's capital facilities plan.

C. In the event that bonds or similar debt instruments are issued for the advanced provision of capital facilities for which impact fees may be expended and where consistent with the bond covenants, impact fees may be used to pay debt service on such bonds or similar debt instruments to the extent that the facilities or improvements provided are consistent with the requirements of this section.

D. Impact fees shall be expended or encumbered, which means being committed as part of the funding for a facility for which the publicly funded share has been assured, building permits applied for or construction contracts let, by the district for a permissible use within ten years of receipt by the county, unless there exists an extraordinary and compelling reason for fees to be held longer than ten years. Such extraordinary or compelling reasons shall be identified to the county by the district. The county must prepare written findings concurring with the district's reasons, and authorizing the later encumbrance or expenditure of the fees prior to the district so encumbering or expending the funds, or directing a refund of the fees.

E. The current owner of property on which an impact fee has been paid may receive a refund of such fees if the impact fees have not been expended or encumbered within ten years of receipt of the funds by the county. In determining whether impact fees have been encumbered, impact fees shall be considered encumbered on a first in, first out basis. The county shall notify potential claimants by first-class mail deposited with the United States Postal Service addressed to the owner of the property as shown in the county tax records.

F. An owner's request for a refund must be submitted to the county council in writing within one year of the date the right to claim the refund arises or the date that notice is given, whichever date is later. Any impact fees that are not expended or encumbered within these time limitations, and for which no application for a refund has been made within this one-year period, shall be retained and expended consistent with this section. Refunds of impact fees shall include any interest earned on the impact fees.

G. Should the county seek to terminate any or all school impact fee requirements, all unexpended or unencumbered funds, including interest earned, shall be refunded to the current owner of the property for which a school impact fee was paid. Upon the finding that any or all fee requirements are to be terminated, the county shall place notice of the termination and the availability of refunds in a newspaper of general circulation at least two times and shall notify all potential claimants by first-class mail addressed to the owner of the property as shown in the county tax records. All funds available for refund shall be retained for a period of one year. At the end of one year, any remaining funds

shall be retained by the county, but must be expended for the district, consistent with this section. The notice requirement in this subsection shall not apply if there are no unexpended or unencumbered balances within the account or accounts being terminated.

H. A developer may request and shall receive a refund, including interest earned on the impact fees, when:

1. The developer does not proceed to finalize the development activity as required by statute or county code; and

2. No impact on the district has resulted. "Impact" shall be deemed to include cases where the district has expended or encumbered the impact fees in good faith prior to the application for a refund. In the event that the district has expended or encumbered the fees in good faith, no refund shall be forthcoming. However, if within a period of three years, the same or subsequent owner of the property proceeds with the same or substantially similar development activity, the owner shall be eligible for a credit. The owner must petition the county and provide receipts of impact fees paid by the owner for a development of the same or substantially similar nature on the same property or some portion thereof. The county shall determine whether to grant a credit, and such determinations may be appealed by following the procedures set forth in K.C.C. 21A.43.070.

I. Interest due upon the refund of impact fees required by this section shall be calculated according to the average rate received by the county or the district on invested funds throughout the period during which the fees were retained. (Ord. 11621 § 118, 1994).

21A.44 DECISION CRITERIA

Sections:

21A.44.010 Purpose.
21A.44.020 Temporary use permit.
21A.44.030 Variance.
21A.44.040 Conditional use permit.
21A.44.050 Special use permit.
21A.44.060 Zone reclassification.
21A.44.070 Urban plan development permit.
21A.44.080 Fully contained community (FCC) permit.
21A.44.090 Permits - variance.
21A.44.100 Shoreline conditional use.

21A.44.010 Purpose. The purposes of this chapter are to allow for consistent evaluation of land use applications and to protect nearby properties from the possible effects of such requests by:

A. Providing clear criteria on which to base a decision;

B. Recognizing the effects of unique circumstances upon the development potential of a property;

C. Avoiding the granting of special privileges;

D. Avoiding development which may be unnecessarily detrimental to neighboring properties;

E. Requiring that the design, scope and intensity of development is in keeping with the physical aspects of a site and adopted land use policies for the area; and

F. Providing criteria which emphasize protection of the general character of neighborhoods. (Ord. 10870 § 622, 1993).

21A.44.020 Temporary use permit. A temporary use permit shall be granted by the county, only if the applicant demonstrates that:

A. The proposed temporary use will not be materially detrimental to the public welfare;

B. The proposed temporary use is compatible with existing land uses in the immediate vicinity in terms of noise and hours of operation;

C. The proposed temporary use, if located in a resource zone, will not be materially detrimental to the use of the land for resource purposes and will provide adequate off-site parking if necessary to protect against soil compaction;

D. Adequate public off-street parking and traffic control for the exclusive use of the proposed temporary use can be provided in a safe manner; and

E. The proposed temporary use is not otherwise permitted in the zone in which it is proposed. (Ord. 10870 § 623, 1993).

21A.44.030 Variance. A variance shall be granted by the county, only if the applicant demonstrates all of the following:

A. The strict enforcement of this title creates an unnecessary hardship to the property owner;

B. The variance is necessary because of the unique size, shape, topography or location of the subject property;

C. The subject property is deprived, under this title, of rights and privileges enjoyed by other properties in the vicinity and under an identical zone;

D. The variance does not create health and safety hazards, is not materially detrimental to the public welfare or is not unduly injurious to property or improvements in the vicinity;

E. The variance does not relieve an applicant from any of the procedural provisions of this title;

F. The variance does not relieve an applicant from any standard or provision that specifically states that no variance from that standard or provision is permitted;

G. The variance does not relieve an applicant from conditions established during prior permit review;

H. The variance does not allow establishment of a use that is not otherwise permitted in the zone in which the proposal is located;

I. The variance does not allow the creation of lots or densities that exceed the base residential density for the zone by more than ten percent;

J. The variance is the minimum necessary to grant relief to the applicant;

K. The variance from setback or height requirements does not infringe upon or interfere with easement or covenant rights or responsibilities;

L. The variance does not relieve an applicant from any provisions of K.C.C. 21A.24, Critical Areas; and

M. Within a special district overlay, the variance does not:

1. Modify, waive or define uses;
2. Waive requirements for special studies or reports; or
3. Reduce vegetation retention standards by more than a total of ten percent.

(Ord. 15051 § 224, 2004: Ord. 12479 § 1, 1996: Ord. 11621 § 107, 1994: Ord. 10870 § 624, 1993).

21A.44.040 Conditional use permit. A conditional use permit shall be granted by the county, only if the applicant demonstrates that:

A. The conditional use is designed in a manner which is compatible with the character and appearance of an existing, or proposed development in the vicinity of the subject property;

B. The location, size and height of buildings, structures, walls and fences, and screening vegetation for the conditional use shall not hinder neighborhood circulation or discourage the permitted development or use of neighboring properties;

C. The conditional use is designed in a manner that is compatible with the physical characteristics of the subject property;

D. Requested modifications to standards are limited to those which will mitigate impacts in a manner equal to or greater than the standards of this title;

E. The conditional use is not in conflict with the health and safety of the community;

F. The conditional use is such that pedestrian and vehicular traffic associated with the use will not be hazardous or conflict with existing and anticipated traffic in the neighborhood;

G. The conditional use will be supported by adequate public facilities or services and will not adversely affect public services to the surrounding area or conditions can be established to mitigate adverse impacts on such facilities; and

H. The conditional use is not in conflict with the policies of the Comprehensive Plan or the basic purposes of this title. (Ord. 15032 § 51, 2004: Ord. 11621 § 108, 1994: Ord. 10870 § 625, 1993).

21A.44.050 Special use permit. A special use permit shall be granted by the county, only if the applicant demonstrates that:

A. The characteristics of the special use will not be unreasonably incompatible with the types of uses permitted in surrounding areas;

B. The special use will not materially endanger the health, safety and welfare of the community;

C. The special use is such that pedestrian and vehicular traffic associated with the use will not be hazardous or conflict with existing and anticipated traffic in the neighborhood;

D. The special use will be supported by adequate public facilities or services and will not adversely affect public services to the surrounding area or conditions can be established to mitigate adverse impacts;

E. The location, size and height of buildings, structures, walls and fences, and screening vegetation for the special use shall not hinder or discourage the appropriate development or use of neighboring properties; and

F. The special use is not in conflict with the policies of the Comprehensive Plan or the basic purposes of this title. (Ord. 10870 § 626, 1993).

21A.44.060 Zone reclassification. A zone reclassification shall be granted only if the applicant demonstrates that the proposal complies with the criteria for approval specified in K.C.C. Title 20.24.180 and 20.24.190 and is consistent with the Comprehensive Plan and applicable community and functional plans. (Ord. 10870 § 627, 1993).

21A.44.070 Urban plan development permit. An urban plan development permit shall be granted only if the applicant demonstrates compliance with the provisions of K.C.C. 21A.39. (Ord. 10870 § 628, 1993).

21A.44.080 Fully contained community (FCC) permit. An application for a FCC permit shall be granted only if the applicant demonstrates compliance with the provisions of K.C.C. 21A.38 and 21A.39. (Ord. 12171 § 9, 1996).

21A.44.090 Shoreline variance.

A. A shoreline variance shall be granted by the county from the bulk, dimensional or performance standards set forth in K.C.C. 21A.25.220 only if the applicant demonstrates that:

1. The review criteria of WAC 173-27-170 have been met;

2. The shoreline variance does not permit a use that is specifically prohibited in the environmental designation; and

3. Views from nearby roads and public areas are protected.

B. A variance from county zoning code requirements shall not be construed to mean a variance from shoreline master program use regulations and vice versa.

C. The burden of proving that a proposed variance meets these conditions shall be on the applicant; absence of such proof shall be grounds for denial of the application. (Ord. 16985 § 113, 2010: Ord. 5734 § 15, 1981: Ord. 3688 § 804, 1974. Formerly K.C.C. 25.32.040).

21A.44.100 Shoreline conditional use.

A. A shoreline conditional use shall be granted by the department for conditional uses identified in K.C.C. 21A.25.130 and 21A.25.170 as shoreline conditional uses only if the applicant demonstrates that:

1. The review criteria of WAC 173-27-160 have been met; and

2. The use will promote or not interfere with public use of surface waters.

B. A shoreline conditional use may be granted by the department for uses not identified as conditional uses in K.C.C. 21A.25.110 and 21A.25.170 only if the applicant demonstrates that:

1. The criteria in subsection A. of this section have been met;

2. The use is not specifically prohibited in the shoreline environment;

3. The use clearly requires specific site location on the shoreline not provided for under the shoreline master program; and

4. Extraordinary circumstances preclude reasonable use of the property in a manner consistent with the use regulations of the K.C.C. chapter 21A.25.

C. The burden of proving that a proposed shoreline conditional use meets the criteria enumerated in this section shall be on the applicant. Absence of such proof shall be grounds for denial of the application. (Ord. 16985 § 115, 2010: Ord. 3688 § 805, 1978. Formerly K.C.C. 25.32.050).

21A.45 HOMELESS ENCAMPMENTS

Sections:

21A.45.010 Purpose. (Effective until January 1, 2025.)
21A.45.020 Definitions. (Effective until January 1, 2025.)
21A.45.030 Approval required. (Effective until January 1, 2025.)
21A.45.040 Use and sponsorship agreements. (Effective until January 1, 2025.)
21A.45.050 Application submittal and content. (Effective until January 1, 2025.)
21A.45.060 Homeless encampment standards. (Effective until January 1, 2025.)
21A.45.070 Parking impacts. (Effective until January 1, 2025.)
21A.45.080 Community notice and informational meeting. (Effective until January 1, 2025.)
21A.45.090 Compliance with permit conditions and written code of conduct. (Effective until January 1, 2025.)
21A.45.095 Violations by managing agency - notice - cure - notice and orders to vacate (expires January 1, 2025).
21A.45.100 Option to modify standards. (Effective until January 1, 2025.)

21A.45.010 Purpose. (Effective until January 1, 2025.) It is the purpose of this chapter to ensure the maintenance of a safe environment within the homeless encampments and to address the potential impacts to neighborhoods by establishment of such homeless encampments. (Ord. 15170 § 6, 2005).

21A.45.020 Definitions. (Effective until January 1, 2025.) The definitions in this section apply throughout this chapter and to K.C.C. 20.20.020 unless the context clearly requires otherwise.

A. "Homeless encampment" means a group of homeless persons temporarily residing out of doors on a site with a host and services provided by a sponsor and supervised by a managing agency.

B. "Host" means the owner of the site property that has an agreement with the managing agency to allow the use of property for a homeless encampment. A "host" may be the same entity as the sponsor or the managing agency.

C. "Managing agency" means an organization that has the capacity to organize and manage a homeless encampment. A "managing agency" may be the same entity as the host or the sponsor.

D. "Public health" means the Seattle-King County department of public health.

E. "Sponsor" means a local church or other local, community-based organization that has an agreement with the managing agency to provide basic services and support for the residents of a homeless encampment and liaison with the surrounding community and joins with the managing agency in an application for a county permit. A "sponsor" may be the same entity as the host or the managing agency. (Ord. 15170 § 7, 2005).

21A.45.030 Approval required. (Effective until January 1, 2025.) A homeless encampment may be permitted as a temporary use in accordance with K.C.C. chapter 21A.32 only in compliance with this chapter. (Ord. 15170 § 8, 2005).

21A.45.040 Use and sponsorship agreements. (Effective until January 1, 2025.) The following written agreements shall be provided by the applicant:

A. If the applicant is not the sponsor, an agreement to provide or coordinate basic services and support for the homeless encampment residents and to join with the applicant in all applications for relevant permits; and

B. If the applicant is not the host, an agreement granting permission to locate the homeless encampment at the proposed location and to join with the applicant in all applications for relevant permits. (Ord. 15170 § 9, 2005).

21A.45.050 Application submittal and content. (Effective until January 1, 2025.)

A. An application for a homeless encampment shall be submitted to the department at least thirty days in advance of the desired date to commence the use for a type 1 permit or forty days in advance of the desired date to commence the use for a type 2 permit.

B. In addition to contents otherwise required for such applications, the application shall include:

1. A copy of a written code of conduct adopted by the host or entered into between the host and managing agency addressing the issues identified in the example code of conduct, Attachment A to Ordinance 15170*. The written code of conduct must require homeless encampment residents to abide by specific standards of conduct to promote health and safety within the homeless encampment and within the adjoining

neighborhoods. The written code of conduct must prohibit the managing agency from preventing homeless encampment residents from calling 9-1-1 and from retaliating against homeless encampment residents who have called 9-1-1. Nothing in this subsection is intended to preclude the host and the managing agency from agreeing, in the written code of conduct, to additional terms or standards of conduct stricter than the example code of conduct;

2. The name of the managing agency and the sponsor including the name and telephone number of the person available to immediately respond to an onsite problem;

3. The host signature;

4. The name of the onsite camp manager, or designee, who is available to immediately respond to an onsite problem and whose telephone number is posted at the encampment entrance and visible from one hundred feet outside the encampment; and

5. The plan through which the managing agency and the sponsor will dispose of garbage and debris prior to vacating the encampment site at the end of the permit period. (Ord. 17950 § 2, 2014: Ord. 15170 § 10, 2005).

***Available in the King County Archives.**

21A.45.060 Homeless encampment standards. (Effective until January 1, 2025.) A homeless encampment is subject to the following standards:

A. The maximum number of residents at a homeless encampment site shall be determined taking into consideration site conditions, but in no case shall be greater than one hundred at any one time;

B. The duration of a homeless encampment at any specific location shall not exceed one hundred twenty-two days at any one time, including setup and dismantling of the homeless encampment;

C. A homeless encampment may be located at the same site no more than once every twelve months;

D. The host and managing agency will assure all applicable public health regulations, including but not limited to the following, will be met:

1. Sanitary portable toilets;
2. Hand washing stations by the toilets;
3. Food preparation or service tents;
4. Security tents;
5. Refuse receptacles; and
6. Disposal of all garbage and debris before vacating the encampment site at the end of the permit period;

E. The homeless encampment shall be within a half mile of a public transportation stop or the sponsor or host must demonstrate the ability for residents to obtain access to the nearest public transportation stop through sponsor or host provided van or car pools. During hours when public transportation is not available, the sponsor or host shall also make transportation available to anyone who is rejected from or ordered to leave the homeless encampment;

F. The homeless encampment site must be buffered from surrounding properties with:

1. A minimum twenty-foot setback in each direction from the boundary of the lot on which the homeless encampment is located, excluding access;
2. Established vegetation sufficiently dense to obscure view; or
3. A six foot high, view-obscuring fence;

G. No permanent structures shall be erected on the homeless encampment site;

H. A regular trash patrol in the immediate vicinity of the homeless encampment site shall be provided;

I. Public health guidelines on food donations and food handling and storage, including proper temperature control, shall be followed and homeless encampment residents involved in food donations and storage shall be made aware of these guidelines;

J. The managing agency shall not permit children under the age of eighteen to stay overnight in the homeless encampment except under exigent circumstances. If a child under the age of eighteen, either alone or accompanied by a parent or guardian, attempts to stay overnight, the managing agency will endeavor to find alternative shelter for the child and any accompanying parent or guardian, including using services such as the King County 2-1-1 crisis clinic. If a child under the age of eighteen, either alone or accompanied by a parent or guardian, appears to be in danger, the managing agency shall immediately contact child protective services;

K. The managing agency shall keep a log of all people who stay overnight in the homeless encampment, including names and dates;

L. The managing agency shall take all reasonable and legal steps to obtain verifiable identification, such as a driver's license, government-issued identification card, military identification or passport from prospective and homeless encampment residents;

M. The managing agency shall enforce the written code of conduct;

N. The site property is owned or leased by the sponsor or an affiliated entity;

O. The host shall provide a transportation plan as part of the permit process, and

P. Managing agencies shall obtain criminal checks of prior convictions for sex offenses and outstanding warrants for violent offenses from the King County sheriff's office for all homeless encampment residents. For homeless encampment residents initially moving onto the site with the homeless encampment, the criminal checks must be completed at least seven days prior to the homeless encampment moving onto the site. For residents moving into the homeless encampment during the permit period, the criminal checks must be completed on or before the date that the new resident moves on site. The managing agency shall be responsible for verifying that the criminal checks occur and for permanently retaining information from the criminal checks. If an encampment resident or prospective encampment resident is a convicted sex offender or has an outstanding warrant for a violent offense, the managing agency shall prohibit the resident from residing at the encampment and shall immediately contact the sheriff's office with the information. (Ord. 17950 § 3, 2014: Ord. 15170 § 11, 2005).

21A.45.070 Parking impacts. (Effective until January 1, 2025.) On-site parking spaces of the host use shall not be displaced unless sufficient parking remains available for the host's use to compensate for the loss of on-site parking spaces. (Ord. 15170 § 12, 2005).

21A.45.080 Community notice and informational meeting. (Effective until January 1, 2025.) The managing agency, in partnership with the sponsor, shall:

A. At least fourteen days before the anticipated start date of the homeless encampment, provide notification to all residences and businesses within five hundred feet of the boundary of the proposed homeless encampment site, but the area shall be expanded as necessary to provide notices to at least twenty different residences or businesses, as well as any homeowner association representing residents receiving notice. The notice shall contain the following specific information:

1. Name of sponsor;
2. Name of host if different from the sponsor;
3. Date the homeless encampment will begin;

4. Length of stay;
5. Maximum number of residents allowed;
6. Planned location of the homeless encampment;
7. Dates, times and locations of community informational meetings about the homeless encampment;
8. Contact information including names and phone numbers for the managing agency and the sponsor; and
9. A county contact person or agency; and

B. Conduct at least one community informational meeting held on the host site, or nearby, at least ten days before the anticipated start date of the homeless encampment. The purpose of the meeting is to provide those residences and businesses that are entitled to notice under this section with information regarding the proposed duration and operation of the homeless encampment, conditions that will be placed on the operation of the homeless encampment and requirements of the written code of conduct, and to answer questions regarding the homeless encampment. (17416 § 19, 2012: Ord. 15170 § 13, 2005).

21A.45.090 Compliance with permit conditions and written code of conduct. (Effective until January 1, 2025.)

A. In order to assess compliance with the terms of the permit, inspections may be conducted at reasonable times without prior notice by the fire district, public health or department staff. The managing agency shall implement all directives of the fire district within forty-eight hours. Public health and department directives shall be implemented within the time specified by the respective agencies.

B. Failure by the managing agency to take action against a resident who violates the terms of the written code of conduct may result in cancellation of the permit. (Ord. 15170 § 14, 2005).

21A.45.095 Violations by managing agency - notice - cure - notice and orders to vacate (expires January 1, 2025). If a violation of K.C.C. 21A.45.090 is determined to have occurred, the department may issue a notice of violation to the managing agency and the sponsor. Within six days of the notice issuance, the managing agency or the sponsor shall demonstrate to the department that the violation has been cured. If the violation is not cured within this time period as determined by the department, the department may issue a notice and order as allowed by K.C.C. Title 23 requiring the residents to vacate the encampment site. By accepting the permit, and as a condition of the permit, the managing agency and the sponsor are presumed to agree to vacate the encampment site within seventeen days if a notice and order is issued and not appealed. (Ord. 17950 § 4, 2014).

21A.45.100 Option to modify standards. (Effective until January 1, 2025.) An applicant for a homeless encampment may apply for a temporary use permit that applies standards that differ from those established by K.C.C. 21A.45.030, 21A.45.040, 21A.45.050, 21A.45.060, 21A.45.070, 21A.45.080 and 21A.45.090. In addition to all other permit application requirements, the applicant shall submit a description of the requirements to be modified and shall demonstrate how the modification will result in a safe homeless encampment under the specific circumstances of the application. The department shall review the proposed modifications and shall either deny or approve the application, with conditions if necessary, to ensure a safe homeless encampment with minimal impacts to the host neighborhood. The hearing examiner shall expedite the hearing on an appeal of the department's decision under this section. (Ord. 15170 § 15, 2005).

21A.50 ENFORCEMENT

Sections:

21A.50.010 Purpose.
21A.50.020 Authority and application.
21A.50.022 Inspections.
21A.50.025 Hazards.
21A.50.030 Violations defined.
21A.50.035 Critical areas violations - corrective work required.
21A.50.037 Critical areas violations - corrective work plan and monitoring.
21A.50.040 Permit suspension, revocation or modification.
21A.50.050 Initiation of revocation or modification proceedings.

21A.50.010 Purpose. The purpose of this chapter is to promote compliance with this title by establishing enforcement authority, defining violations, and setting standards for initiating the procedures set forth in K.C.C. Title 23, Enforcement, when violations of this title occur. (Ord. 10870 § 629, 1993).

21A.50.020 Authority and application. The director is authorized to enforce this title, any implementing administrative rules adopted under K.C.C. chapter 2.98 administration, and approval conditions attached to any land use approval, through revocation or modification of permits or through the enforcement, penalty and abatement provisions of K.C.C. Title 23, Code Compliance. (Ord. 15051 § 225, 2004: Ord. 10870 § 630, 1993).

21A.50.022 Inspections. The director is authorized to make such inspections and take such actions as may be required to enforce this title. (Ord. 15051 § 226, 2004).

21A.50.025 Hazards. If the director determines that an existing site, as a result of alterations regulated under this title has become a hazard to life and limb, endangers property or the environment, or adversely affects the safety, use or stability of a public way or public drainage channel, the owner of the property upon which the alterations are located, or other person or agent in control of the property, upon receipt of notice in writing from the director, shall within the period specified in the notice restore the site affected by the alterations or remove or repair the alterations so as to eliminate the hazard and conform with this title. (Ord. 15051 § 227, 2004).

21A.50.030 Violations defined. No building permit or land use approval in conflict with this title shall be issued. Structures or uses that do not conform to this title, except legal nonconformances specified in K.C.C. chapter 21A.32 and approved variances, are violations subject to the enforcement, penalty and abatement provisions of K.C.C. Title 23, including, but not limited to:

A. Establishing a use not permitted in the zone in which it is located;

B. Constructing, expanding or placing a structure in violation of setback, height and other dimensional standards in this title;

C. Establishing a permitted use without complying with applicable development standards set forth in other titles, ordinances, rules or other laws, including but not limited to, road construction, surface water management, the Fire Code and rules of the department of public health;

D. Failing to carry out or observe conditions of land use or permit approval, including contract development standards;

E. Failing to secure required land use or permit approval before establishing a permitted use;

F. Failing to maintain site improvements, such as landscaping, parking or drainage control facilities as required by this code or other King County ordinances;

G. Undertaking any development within the shoreline jurisdiction without first obtaining a required substantial development permit or required statement of exemption; and

H. Undertaking any development within the shoreline jurisdiction that is exempt from the requirement to obtain a substantial development permit that is not in compliance with the policy of RCW 90.58.020 and the requirements of chapter 173-26 WAC and the King County shoreline master program. (Ord. 16985 § 116, 2010: Ord. 10870 § 631, 1993).

21A.50.035 Critical areas violations - corrective work required.

A. A person who alters a critical area or buffer in violation of law shall undertake corrective work in compliance with this chapter and K.C.C. chapter 23.08. When feasible, corrective work shall include restoration of the critical area and buffer. Corrective work shall be subject to all permits or approvals required for the type of work undertaken. In addition, the violator shall be subject to all fees associated with investigation of the violation and the need for corrective work.

B. When a wetland or buffer is altered in violation of this title, restoration of the wetland and buffer shall comply with the restoration standards in K.C.C. 21A.24.340.

C. When an aquatic area or buffer is altered in violation of this title, restoration of the stream and buffer shall comply with the restoration standards in K.C.C. 21A.24.380.

D. All corrective work shall be completed within the time specified in the corrective work plan, but in no case later than one year from the date the corrective work plan is approved by the department, unless the director authorizes a longer period. The violator shall notify the department when restoration measures are installed and monitoring is commenced.

E. Any failure to satisfy corrective work requirements established by law or condition including, but not limited to, the failure to provide a monitoring report within thirty days after it is due or comply with other provisions of an approved corrective work plan shall constitute a default, and the department may demand payment of any financial guarantees or require other action authorized by K.C.C. Title 27A or other applicable law.

F. Reasonable access to the corrective work site shall be provided to King County for the purpose of inspections during any monitoring period. (Ord. 15051 § 228, 2004).

21A.50.037 Critical areas violations - corrective work plan and monitoring.

A. Except as otherwise provided in subsection D. of this section, a person who violates this title shall submit a proposed corrective work plan to the department for approval. The department may modify the plan and shall approve it only if the department determines that the plan complies with the requirements for mitigation plans in K.C.C. 21A.24.130.

B. All corrective work shall be accomplished according to the approved corrective work plan, and corrective work shall not be undertaken until after approval of the plan by the department.

C. Corrective work shall be monitored in accordance with the approved corrective work plan. Monitoring may be required for up to five years. Monitoring under the corrective work plan shall comply with the monitoring requirements in K.C.C. 21A.24.130.

D. The director may exempt from this section emergency response activities or other actions required to be undertaken immediately or within a time too short to allow full compliance with this title or to avoid an imminent threat to public health or safety or to property. (Ord. 15051 § 229, 2004).

21A.50.040 Permit suspension, revocation or modification.

A. Permit suspension, revocation or modification shall be carried out through the procedures set forth in K.C.C. Title 23. Any permit, variance, or other land use approval issued by King County pursuant to this title may be suspended, revoked or modified on one or more of the following grounds:

1. The approval was obtained by fraud;
2. The approval was based on inadequate or inaccurate information;
3. The approval, when given, conflicted with existing laws or regulations applicable thereto;
4. An error of procedure occurred which prevented consideration of the interests of persons directly affected by the approval;
5. The approval or permit granted is being exercised contrary to the terms or conditions of such approval or in violation of any statute, law or regulation;
6. The use for which the approval was granted is being exercised in a manner detrimental to the public health or safety;
7. The holder of the permit or approval interferes with the director or any authorized representative in the performance of his or her duties; or
8. The holder of the permit or approval fails to comply with any notice and order issued pursuant to K.C.C. Title 23.

B. Authority to revoke or modify a permit or land use approval shall be exercised by the issuer, as follows:

1. The council may, after a recommendation from the examiner, revoke or modify any residential density incentive approval, transfer of development credit, Urban Planned Development, preliminary subdivision, zone reclassification or special use permit;
2. The adjustor may revoke or modify any variance or conditional use permit, provided that if it was reviewed through a public hearing, a new public hearing shall be held on its revocation or modification; and
3. The director may revoke or modify any permit or other land use approval issued by the director. (Ord. 10870 § 632, 1993).

21A.50.050 Initiation of revocation or modification proceedings.

A. The director may suspend any permit, variance or land use approval issued by any King County issuing agency and processed by the department pending its revocation or modification, or pending a public hearing on its revocation or modification;

B. The issuing agency may initiate proceedings to revoke or modify any permit or land use approval it has issued; and

C. Persons who are aggrieved may petition the issuing agency to initiate revocation or modification proceedings, and may petition the director to suspend a permit, variance or land use approval pending a public hearing on its revocation or modification. (Ord. 10870 § 633, 1993).

21A.55 DEMONSTRATION PROJECTS

Sections:

21A.55.010 Purpose.
21A.55.020 Demonstration project - authority, application and designation.
21A.55.030 Demonstration project - general provisions.

21A.55.050 Demonstration project overlay - rural forest demonstration project.
21A.55.060 Demonstration project overlay - low-impact development and Built Green.
21A.55.101 Sustainable communities and housing projects.
21A.55.105 Regional motor sports facility – master planning process demonstration project.

21A.55.010 Purpose. Purpose. The purpose of this section is to provide for "demonstration projects" as a mechanism to test and evaluate alternative development standards and processes prior to amending King County policies and regulations. Alternative development standards might include standards affecting building and/or site design requirements. Alternative processes might include permit review prioritization, alternative review and revision scheduling, or staff and peer review practices. All demonstration projects shall have broad public benefit through the testing of new development regulations and shall not be used solely to benefit individual property owners seeking relief from King County development standards. A demonstration project shall be designated by the Metropolitan King County Council. Designation of each new demonstration project shall occur through an ordinance which amends this code and shall include provisions that prescribe the purpose(s) and location(s) of the demonstration project. Demonstration projects shall be located in urban and/or rural areas which are deemed most suitable for the testing of the proposed alternative development regulations. Within such areas development proposals may be undertaken to test the efficacy of alternative regulations that are proposed to facilitate increased quality of development and/or increased efficiency in the development review processes. (Ord. 12627 § 1, 1997).

21A.55.020 Demonstration project - authority, application and designation.

A. In establishing any demonstration project, the council shall specify the following:

1. The purpose of the demonstration project;
2. The location or locations of the demonstration project;
3. The scope of authority to modify standards and the lead agency or department with authority to administer the demonstration project;
4. The development standards established by this title or other titles of the King County Code that affect the development of property that are subject to administrative modifications or waivers;
5. The process through which requests for modifications or waivers are reviewed and any limitations on the type of permit or action;
6. The criteria for modification or waiver approval;
7. The effective period for the demonstration project and any limitations on extensions of the effective period;
8. The scope of the evaluation of the demonstration project and the date by which the executive shall submit an evaluation of the demonstration project; and
9. The date by which the executive shall submit an evaluation of specific alternative standards and, if applicable, proposed legislation.

B. A demonstration project shall be designated by the Metropolitan King County Council through the application of a demonstration project overlay to properties in a specific area or areas. A demonstration project shall be indicated on the zoning map or a notation in the geographic information system data layers maintained by the department of permitting and environmental review, by the suffix "-DPA" (meaning demonstration project area) following the map symbol of the underlying zone or zones. Within a designated demonstration project area, approved alternative development

regulations may be applied to development applications. (Ord. 17485 § 46, 2012: Ord. 17420 § 120, 2012: Ord. 12627 § 2, 1997).

21A.55.030 Demonstration project - general provisions.

A. The demonstration projects set forth in this chapter are the only authorized demonstration projects. New or amended demonstration projects to carry out new or different goals or policies shall be adopted as part of this chapter.

B. Demonstration projects must be consistent with the King County Comprehensive Plan. Designation of a demonstration project and its provisions to waive or modify development standards must not require nor result in amendment of the comprehensive plan nor the comprehensive land use map.

C. Unless they are specifically modified or waived pursuant to the provisions of this chapter, the standard requirements of this title and other county ordinances and regulations shall govern all development and land uses within a demonstration project area. Property-specific development standards (P-suffix conditions) as provided in K.C.C. 21A.38 shall supersede any modifications or waivers allowed by the provisions of this chapter.

D. Demonstration project sites should be selected so that any resulting amended development standards or processes can be applied to similar areas or developments. Similar areas could include those with similar mixes of use and zoning. Similar developments could include types of buildings such as commercial or multifamily and types of development such as subdivisions or redevelopment. (Ord. 12627 § 3, 1997).

21A.55.050 Demonstration project overlay - rural forest demonstration project.

A. The purpose of the rural forest demonstration project is to test techniques to maintain long-term forest uses in areas with a predominant parcel size of significantly less than eighty acres that are located in proximity to residential development. The demonstration project will also provide information and data to assist in the development of King County Comprehensive Plan policies to guide application and refinement of forest protection regulations.

B. The rural forest demonstration project will be implemented on the five-hundred-ten-acre site located east of the Rattlesnake Mountain Scenic Area, as shown in Attachment A to Ordinance 13275*.

C. The rural forest demonstration project shall include:

1. Preparation of a forest management plan for the entire demonstration project site. The forest management plan shall be developed jointly by the department of natural resources and parks and the property owner with input from the Washington state Department of Natural Resources, local tribes and citizens, and shall be approved by the director of the department of natural resources and parks. The forest management plan shall include:

a. an inventory of existing conditions, including current tree species and respective size ranges, understory composition, critical areas, natural and human induced disturbance regimes and history of ecosystem changes;

b. objectives for forest management including water quality protection, habitat enhancement, maintenance of scenic areas, surface water management and minimal impacts to neighbors.

c. a reforestation element consistent with these management objectives including establishment of stream buffers of one hundred eighty-three feet for Class II streams with salmonids and one hundred feet for Class III streams; and

d. an operation and maintenance element including anticipated harvest activities;

2. Creation of a dedicated fund of the Uplands Snoqualmie Valley Homeowners Association the proceeds of which may be expended solely to implement and monitor the forest management plan. The net proceeds of any harvest of forest products from the common tracts of the Uplands Snoqualmie Valley shall be deposited in such fund to the extent necessary to bring the aggregate amount of money in such fund to an amount reasonably anticipated to be needed to pay the cost of implementing and monitoring the forest management plan for the current and next two calendar years;

3. Creation of a Stewardship Committee of the Uplands Snoqualmie Valley Homeowners Association to implement the forest management plan. The stewardship committee shall, in consultation with King County and Washington state Department of Natural Resources: ensure sufficient funding is available for implementation of the forest management plan, hire a qualified forester or foresters to implement the forest management plan and hire qualified staff to monitor implementation of the forest management plan and prepare required reports. King County and the Washington state Department of Natural Resources shall annually inspect the property for compliance with the forest management plan consistent with the terms of the conservation easement and King County shall offer training to the members of the stewardship committee on forestry techniques and issues;

4. Application and review of a formal subdivision of forty-one lots, exclusive of common tracts, on the five hundred-ten-acre site. The subdivision and infrastructure shall be designed to integrate with the forest landscape, including pavement widths no wider than needed to meet safety considerations. A goal of the demonstration project is to test the marketability of these forest lots in a timely manner; to that end, it is a goal of King County to render a decision on the subdivision application within six months of submittal of the application. A priority review process shall be implemented as permitted by K.C.C. 21A.55.010. The department of permitting and environmental review shall assign a permit coordinator and a project review team to complete review of all aspects of the application, and shall negotiate appropriate fees for the review process with the applicant. Neither the designation of the site as a demonstration project nor approval of the forest management plan constitute approval of the subdivision application or in any way limit King County discretion in SEPA review or application of regulations to the subdivision application;

5. Dedication or conveyance, upon final plat approval, to King County or a qualified nonprofit conservation organization of a conservation easement in perpetuity upon the demonstration project site that: prohibits any future subdivision activity; prohibits all development of the site other than residential development of no more than forty-one lots; restricts such residential development and associated lawn, landscaped areas, driveways and fenced areas to an area not to exceed two acres within each lot; restricts the uses of the remaining nonresidential portion of the site to open space and forest practices and incidental uses necessary for the residential use on the forty-one lots such as for roads, access drives (not including on-site driveways) utilities and storm detention; provides for the dedicated fund as described in K.C.C. 21A.55.050C.2; requires the owner to exercise its reasonable best efforts to implement the forest management plan and provides for enforcement of the terms of the conservation easement first through nonbinding mediation. Adoption of this demonstration project shall be subject to council review of the conservation easement, a copy of which shall be provided to the council by August 20, 1998; and

6. An inventory of properties within King County with similar characteristics to the rural forest demonstration project site and an analysis of the potential effects of

development of those properties under the same requirements as the demonstration project.

D. Application to modify or waive development standards of K.C.C. Title 21A for this individual development proposal shall be administratively approved by the director of the department of permitting and environmental review and shall be consistent with an approved forest management plan developed for the entire five-hundred-ten acre site.

E. The application to modify or waive development standards for this development proposal shall be evaluated on the merits of the specific proposal. Approval or denial of a proposed modification or waiver shall not be construed as precedent setting for elsewhere in the county.

F. Modification or waivers approved pursuant to the rural forest demonstration project shall be in addition to those modifications or waivers that are currently allowed by K.C.C. Title 21A. The range of proposed modifications to development regulations that may be considered pursuant to the rural forest demonstration project shall only include the following zoning code regulations:

1. Development Standards - Landscaping and Water Use, K.C.C. chapter 21A.16, limited to the following sections:

a. landscaping - street frontages, K.C.C. 21A.16.050;

b. landscaping - interior lot lines, K.C.C. 21A.16.060; and

c. landscaping - additional standards for required landscape areas, K.C.C. 21A.16.090.

2. Development Standards - Parking and Circulation, K.C.C. chapter 21A.18, limited to the following sections:

a. pedestrian and bicycle circulation and access, K.C.C. 21A.18.100; and

b. off-street parking plan design standards, K.C.C. 21A.18.110.

G. The modification or waiver review process is as follows:

1. Requests for modifications or waivers may only be submitted in relation to a formal subdivision proposal;

2. Requests shall be:

a. submitted to the department of permitting and environmental review prior to or in conjunction with the subdivision application for preliminary approval of a formal subdivision on the project site; and

b. in writing, along with any supporting documentation. The supporting documentation must illustrate how the proposed modification meets the criteria of K.C.C. 21A.55.050.H;

3. Notice of application, review and approval of proposed modifications or waivers submitted in conjunction with a formal subdivision application shall be treated as a Type 2 land use decision. In approving a proposed modification or waiver, the director must conclude that the criteria for approval in K.C.C. 21A.55.050.H have been met;

4. A preapplication meeting to determine the need for, and the likely scope of, a proposed modification or modifications or waiver or waivers shall be required prior to submittal of a modification request; and

5. Administrative appeals of director approved modifications or waivers shall be combined with consideration of the underlying application for preliminary subdivision approval.

H. The application for a rural forest demonstration project must, for modification or waiver approval, demonstrate how the proposed project, with modifications or waivers to the code, will be consistent with and implement the approved forest management plan. This shall be demonstrated by documenting that the development with modifications or waivers:

1. Enhances the preservation of forestry for resource value, open space, scenic views and wildlife habitat;

2. Reduces impacts on the natural environment or restores natural functions; and

3. Supports the integration of forest uses and homesites.

I. The forest management plan for a rural forest demonstration project shall be developed and a decision on its approval or denial shall be reached no more than thirty days after designation of the site as a rural forest demonstration project. If the forest management plan is not approved thirty days after designation as a rural forest demonstration project, the executive shall propose restoring the site to its prior land use designations and zoning classifications as part of the 1999 amendments to the King County Comprehensive Plan. Regulatory modification or waiver applications authorized by Ordinance 13275 shall not be accepted by the department of permitting and environmental review after March 1, 1999. Modifications or waivers to the King County Code contained within an approved development proposal shall be valid as long as the underlying permit. The rural forest demonstration project shall continue for a period of five years from the final approval of the subdivision application, with reporting periods specific to measuring the goals of the forest management plan.

J. The director of the department of natural resources and parks shall submit a report on the rural forest demonstration project to the council following approval of the forest management plan evaluating the process used to prepare the forest management plan, an inventory of other properties that have similar characteristics to the demonstration project site, the applicability and potential effects of allowing these other properties to develop under the same requirements as the demonstration project and recommending any changes that should be made to county policy or regulations to maintain long-term forestry in areas no longer managed for large-scale commercial forestry. In addition, a report shall be prepared annually by qualified staff retained by the Stewardship Committee of the Uplands Snoqualmie Valley Homeowners Association or subsequent management entity of the forest management plan and submitted to the Rural Forest Commission. The annual reporting shall commence six months following final approval of the subdivision. The first two annual reports shall describe the annual work program and budget for implementation of the forest management plan, progress made in implementing the work program, and success in marketing the homesites. Annual reports for the subsequent three years shall document the annual budget and continued progress in implementing the forest management plan, the level of involvement by homeowners in forest management and any problems in implementation generated by homeowners. The Rural Forest Commission shall review the annual reports and shall inform the director of the department of natural resources and parks if it has found that necessary implementation measures of the forest management plan have not been followed. If so, and if the director of the department of natural resources and parks determines it is necessary, the director shall request the Stewardship Committee of the Uplands Snoqualmie Valley Homeowners Association to take corrective action. If satisfactory action is not taken, the director may invoke the enforcement mechanism of the conservation easement. The annual reports will also provide information for further consideration of changes to county policies or regulations for maintenance of long-term forestry. (Ord. 17420 § 121, 2012: Ord. 15606 § 31, 2006: Ord. 14199 § 239, 2001: Ord. 13275 § 1, 1998).

***Available in the King County Archives.**

21A.55.060 Demonstration project overlay – low-impact development and Built Green.

A. The purpose of the low-impact development and Built Green demonstration projects is to determine whether innovative permit processing, site development and building construction techniques based on low-impact development and building construction practices result in environmental benefits, affordable housing and lead to administrative and development cost savings for project applicants and King County. The demonstration projects will provide information on application of these techniques to an urban infill mixed-use redevelopment project, an urban single family residential project, a Vashon Town housing project and an urban infill residential redevelopment project. The demonstration projects will also provide information to assist in the development of King County Comprehensive Plan policies to guide application and refinement of regulations such as zoning, subdivision, roads and stormwater regulations. Expected benefits from the demonstration projects include: improved conditions of habitat, ground and surface waters within a watershed; reduced impervious surface areas for new site infrastructure in developed and redeveloped projects; greater use of recycled-content building materials and more efficient use of energy and natural resources; and the opportunity to identify and evaluate potential substantive changes to land use development regulations that support and improve natural functions of watersheds. The demonstration projects will also evaluate whether consolidated administrative approval of modifications or waivers and any subsequent hearings, if required, effectively speeds the development review process while maintaining land use coordination and environmental protection, and whether that leads to administrative costs savings for project applicants and King County.

B. The department shall implement the low-impact development and Built Green demonstration projects in all or a portion of each of the following: the White Center neighborhood of the Greenbridge Project as described in Attachment A* to Ordinance 14662; the unincorporated Urban Area north of Burien at approximately 4th Avenue Southwest and Southwest 116th Street known as Park Lake Homes II as described in Attachment A* to Ordinance 16099 the unincorporated Urban Area east of Renton at approximately 148th Avenue Southeast and Southeast 128th Street as described in Attachment B* to Ordinance 14662; and the Vashon Town as described in Attachment C to Ordinance 14662*. If the geographic boundaries of the Greenbridge Project are expanded, the provisions of Ordinance 14662 may apply provided the criteria in subsection L. of this section are met.

C. A request by the applicant to modify or waive development standards for the development proposals shall be evaluated by the department based on the criteria in subsection L. of this section. A request shall first be either approved or denied administratively and may be further reviewed as described in subsection H.3. of this section. Approval or denial of the proposed modification or waiver shall not be construed as applying to any other development application either within the demonstration project area or elsewhere in the county.

D. A modification or waiver approved by the department in accordance with the low-impact development and Built Green demonstration projects shall be in addition to those modifications or waivers that are currently allowed by K.C.C. Title 9 and this title. The range of proposed modifications or waivers to development regulations that may be considered pursuant to the low-impact development and Built Green demonstration projects shall include only the following King County code regulations and related public rules:

1. Drainage review requirements: K.C.C. chapter 9.04 and the Surface Water Design Manual;

2. King County road standards: K.C.C. 14.42.010 and the King County road design and construction standards;

3. Density and dimensions: K.C.C. chapter 21A.12, if the base density is that of the zone applied to the entire demonstration project and if the minimum density is not less than the minimum residential density of the zone calculated for the portion of the site to be used for residential purposes, in accordance with K.C.C. 21A.12.060. However, if a demonstration project provides fifty-one percent or more of the housing to households that, at the time of initial occupancy, have incomes of eighty percent or less of median income for King County as periodically published by the United States Department of Housing and Urban Development, or its successor agency, or if fifty-one percent or more of the rental housing is permanently priced to serve low-income senior citizens, then the director may approve:

a. less than the minimum density; and

b. for parcels within the area bounded by SW Roxbury Street, 12th Avenue SW, SW 102nd Street and 2nd Avenue SW that are developed in conjunction with the Greenbridge Project, greater than the maximum density, up to a maximum of R-48 (Residential forty-eight dwelling units per acre);

4. Design requirements: K.C.C. chapter 21A.14;

5. Landscaping and water use: K.C.C. chapter 21A.16;

6. Parking and circulation: K.C.C. chapter 21A.18;

7. Signs: K.C.C. chapter 21A.20; and

8. Environmentally sensitive areas: K.C.C. chapter 21A.24, if the modification results in a net improvement to the functions of the sensitive area.

E. A demonstration project authorized by this section and located in the R-12 through R-48 zones may contain residential and limited nonresidential uses subject to the following provisions:

1. The demonstration project may request a modification or waiver of any of the development conditions contained in K.C.C. 21A.08.030, 21A.08.040, 21A.08.050, 21A.08.060, 21A.08.070, 21A.08.080 and 21A.08.100, subject to the review process described in subsection H. of this section and the criteria described in subsection L. of this section.

2. The demonstration project may include single family detached residential dwelling units as a permitted use, subject to the review process described in subsection H. of this section and the criteria described in subsection L. of this section.

3. The demonstration project may include any nonresidential use allowed as a permitted use in the NB zone, subject to any development conditions contained in K.C.C. 21A.08.040, 21A.08.050, 21A.08.060, 21A.08.070, 21A.08.080 and 21A.08.100, without the need to request a modification or waiver as described in subsection H. of this section. The applicant may request a modification or waiver of the development conditions contained in K.C.C. 21A.08.030, 21A.08.040, 21A.08.050, 21A.08.060, 21A.08.070, 21A.08.080, and 21A.08.100, subject to the criteria in subsection L. of this section. If a nonresidential use is permitted in the R-12 through R-48 zones, subject to development conditions, and is permitted in the NB zone without development conditions, the use shall be permitted in the demonstration project without development conditions and without the need to request a modification or waiver.

4. If a nonresidential use is subject to a conditional use permit in the R-12 through R-48 zones and not subject to a conditional use permit in the NB zone, the use shall be permitted in the demonstration project without requiring a conditional use permit.

5. If a use is subject to a conditional use permit in both the R-12 through R-48 zones and the NB zone or only in the NB zone, the use may be permitted in the demonstration project if the demonstration project applies for and obtains a conditional use permit and satisfies the conditional use permit criteria.

6. Uses authorized by this subsection shall be allowed only as part of a demonstration project under this section. All such uses shall be subject to the development standards in KCC 21A.12.030, except as may be modified or waived under subsection D. of this section and this subsection E.

F. A site in the NB and R-12 through R-48 zones located in a demonstration project authorized by this section may contain residential uses subject to the following:

1. The demonstration project may request a modification or waiver for the site of any of the development conditions contained in K.C.C. 21A.08.030, 21A.08.040, 21A.08.050, 21A.08.060, 21A.08.070, 21A.08.080 and 21A.08.100, subject to the review process described in subsection H. of this section and the criteria described in subsection M. of this section;

2. The site may include single family detached residential dwelling units as a permitted use, subject to the review process under subsection H. of this section and the criteria described in subsection M of this section;

3. The site may include any residential use allowed as a permitted use in the R-12 through R-48 zones, subject to any development conditions in K.C.C. 21A.08.030, without the need to request a modification or waiver under subsection H. of this section. The applicant may request a modification or waiver of the development conditions in K.C.C. 21A.08.030, subject to the criteria in subsection M. of this section. If a residential use is permitted, subject to development conditions, in the NB zone and is permitted without conditions in the R-12 through R-48 zones, the use shall be permitted without development conditions and without the need to request a modification or waiver;

4. If a residential use is a conditional use in the NB zone and is a permitted use in the R-12 through R-48 zones, the use shall be permitted as a permitted use under the conditions that apply in the R12 through R-48 zones;

5. If a use is subject to a conditional use permit in both the R-12 through R-48 zones and the NB zone or only in the R-12 through R-48 zones, the use shall be permitted in the demonstration project if the demonstration project applies for and obtains a conditional use permit and satisfies the conditional use permit criteria; and

6. Uses authorized by this subsection shall be allowed only as part of a demonstration project under this section. All such uses shall be subject to the development standards in K.C.C. 21A.12.040, except as may be modified or waived under subsection D. of this section and this subsection F.

G. This subsection authorizes a residential basics program for townhouse and apartment building types if such housing are located in a demonstration project located in the R-12 through R-48 zones, even if not otherwise authorized by the department of permitting and environmental review public rules chapter 16-04: residential basics program.

H.1. Requests for a modification or waiver made in accordance with this section may only be submitted in writing in relation to the following types of applications:

a. a site development permit;
b. a binding site plan;
c. a building permit;
d. a short subdivision;
e. a subdivision;
f. a conditional use permit; or
g. a clearing and grading permit.

2. Requests shall be submitted to the department in writing before or in conjunction with an application for one or more of the permits listed in this subsection, together with any supporting documentation. The supporting documentation must

illustrate how the proposed modification meets the criteria of subsection L. of this section.

3. Except for an applicant's request for a modification or waiver submitted in conjunction with an application for a subdivision, the notice of application, review and approval of a proposed modification or waiver shall be treated as a Type 2 land use decision in accordance with K.C.C. 20.20.020. The request for a modification or waiver submitted in conjunction with an application for a subdivision shall be treated as a Type 3 land use decision in accordance with K.C.C. 20.20.020.

4. A preapplication meeting with the applicant and the department to determine the need for and the likely scope of a proposed modification or waiver is required before submittal of such a request. The department of natural resources and parks and the department of transportation shall be invited to participate in the preapplication meeting, if necessary.

5. If the applicant requests a modification or waiver of K.C.C. 9.04.050 or the Surface Water Design Manual, the director shall consult with the department of natural resources and parks before granting the modification or waiver.

6. If the applicant requests a variance from the county road standards, the director shall refer the request to the county road engineer for decision under KCC 14.42.060, with the right to appeal within the department of transportation as provided in K.C.C. 14.42.062. The purposes of this demonstration ordinance are intended as a factor to be considered relative to the public interest requirement for road variances described in K.C.C. 14.42.060.

7. Administrative appeals of modifications or waivers approved by the director shall be combined with any appeal of the underlying permit decision, if the underlying permit is subject to appeal.

I. The hearing examiner may consider an environmental impact statement adequacy appeal in conjunction with a demonstration project plat appeal if the environmental impact statement is prepared by a lead agency other than the department and if its adequacy has not previously been adjudicated, even if not otherwise authorized by K.C.C. 20.44.120.

J. An approved development proposal for any of the applications listed in subsection H.1. of this section, including site plan elements or conditions of approval, may be amended or modified at the request of the applicant or the applicant's successor in interest designated by the applicant in writing. The director may administratively approve minor modifications to an approved development proposal. Modifications that result in major changes as determined by the department or as defined by the approval conditions, shall be treated as a new application for purposes of vesting and shall be reviewed as applicable to the underlying application pursuant to K.C.C. 20.20.020. Any increase in the total number of dwelling units above the maximum number set forth in the development proposal permit or approval shall be deemed a major modification. The county, through the applicable development proposal permit or approval conditions, may specify additional criteria for determining whether proposed modifications are major or minor. The modifications allowed under this section supersede other modification or revision provisions of K.C.C. Title 16, Title 19A and this title.

K.1. The preliminary subdivision approval of a subdivision with more than four hundred units that is part of a demonstration project under this section shall be effective for eighty-four months, even if not otherwise authorized by K.C.C. 19A.12.020. The director may administratively grant a one-time extension, extending the preliminary subdivision approval an additional five years, only if the applicant has shown substantial progress towards development of the demonstration project. Before granting the extension, the director will assess the applicant's compliance with the demonstration

project conditions and may modify or impose new standards deemed necessary for the public health or safety.

2. A code modification or waiver approved under this section is effective during the validity of the underlying development permit or for forty-eight months, whichever is longer.

L.1. To be eligible to use the provisions of the demonstration project, development proposals must be located within the boundaries of the Greenbridge Project as described in Attachment A to Ordinance 15654*, or as may be modified as described in subsection B. of this section; in the unincorporated urban area north of Burien at approximately 4th Avenue Southwest and Southwest 116th Street known as Park Lake Homes II as described in Attachment A to Ordinance 16099*; in the area east of Renton at approximately 148th Avenue Southeast and Southeast 128th Street as described in Attachment B to Ordinance 14662*; and in the Vashon Town as described in Attachment C to Ordinance 14662*.

2. Proposals to modify or waive development regulations for a development application must be consistent with general health, safety and public welfare standards, and must not violate state or federal law.

3.a. Applications must demonstrate how the proposed project, when considered as a whole with the proposed modifications or waivers to the code, will meet all of the criteria listed in this subsection, as compared to development without the modification or waiver, and achieves higher quality urban development; enhances infill, redevelopment and greenfield development; optimizes site utilization; stimulates neighborhood redevelopment; and enhances pedestrian experiences and sense of place and community.

b. Any individual request for a modification or waiver must meet two or more of the following criteria:

(1) uses the natural site characteristics to protect the natural systems;

(2) addresses stormwater and drainage safety, function, appearance, environmental protection and maintainability based upon sound engineering judgment;

(3) contributes to achievement of a two-star or a three-star rating for the project site under the Built Green "Green Communities" program recognized by the Master Builders Association of King and Snohomish counties; or

(4) where applicable, reduces housing costs for future project residents or tenants without decreasing environmental protection.

4. The criteria of this subsection supersede other variance, modification or waiver criteria and provisions of K.C.C. Title 9 and Title 21A.

M.1. Except for Park Lake Homes II and the part of Greenbridge that was added to the demonstration project by Ordinance 15654, regulatory modification and waiver applications, or both, authorized by this section shall be filed with the department by December 31, 2007, or by such a later date as may be specified in the conditions of any development approval for any type of modification or waiver for which the opportunity for future application is expressly granted in those conditions. For Park Lake Homes II and the part of Greenbridge that was added to the demonstration project by Ordinance 15654, regulatory modification and waiver applications, or both, authorized by this section shall be filed with the department by December 31, 2010, or by such a later date as may be specified in the conditions of any development approval for any type of modification or waiver for which the opportunity for future application is expressly granted in those conditions.

2. Modifications or waivers contained within an approved development proposal shall be valid as long as the underlying permit or development application approval is valid. A permit or approval that implements an approved code modification or waiver shall be considered under the zoning and other land use control ordinances in

effect on the date the applicable complete code modification or waiver application is filed.

3. Except for Park Lake Homes II and the part of Greenbridge that was added to the demonstration project by Ordinance 15654, modifications or waivers that are approved as separate applications must be incorporated into a valid permit or development application that must be filed by December 31, 2007. For Park Lake Homes II and the part of Greenbridge that was added to the demonstration project by Ordinance 15654, modifications or waivers that are approved as separate applications must be incorporated into a valid permit or development application that must be filed by December 31, 2010.

4. The director may extend the date for filing the demonstration project permit and development applications for a maximum of twelve months.

5. Except for Park Lake Homes II and the part of Greenbridge that was added to the demonstration project by Ordinance 15654, the ability to establish the location and maximum size of uses that are not otherwise permitted in the R-12 through R-48 zones as set forth in subsection E. of this section expires December 31, 2007. For Park Lake Homes II and the part of Greenbridge that was added to the demonstration project by Ordinance 15654, the ability to establish the location and the maximum size of uses that are not otherwise permitted in the R-12 through R-48 zones as set forth in subsection E. of this section expires December 31, 2010. The ability to establish the location and maximum size of uses that are not otherwise permitted in the NB zone or the R-18 zone as set forth in subsection F. of this section expires at the end of the effective period established in subsection K. of this section.

6. Any deadline set forth in this subsection shall be adjusted to include the time for appeal of all or any portion of the project approval.

N.1. By December 31, 2006, the director shall prepare and submit to the council a report on the pilot programs that:

a. describes and evaluates the pertinent preliminary results from the demonstration projects; and

b. recommends changes, based on the evaluation, which should be made to the county processes and ordinances.

2. If only insufficient or inconclusive data are available when this report is due, the director shall provide an interim status report and indicate the date a subsequent report or reports will be transmitted to fully evaluate outcomes of the demonstration projects. (Ord. 17420 § 122, 2012: Ord. 16099 § 1, 2008: Ord. 15654 § 1, 2006: 14662 § 1, 2003).

***Available in the King County Archives.**

21A.55.101 Sustainable communities and housing projects.

A.1. The purpose of the sustainable communities and housing demonstration projects is to provide affordable housing and workforce housing integrated into developments containing market rate housing and maximize sustainable development, which includes bike, pedestrian and transit connections, a mix of housing types, and the use of recyclable materials. The demonstration projects will provide information on the application of these techniques to urban infill redevelopment and urban single family residential development, some of which may include mixed use. The demonstration projects will also assist the county in refining regulations relating to zoning, subdivision, roads and stormwater as they relate to sustainable development.

2. The demonstration projects will also enable the county to evaluate whether consolidated administrative approval of zoning and subdivision-related modifications or waivers and any subsequent hearings, if required, effectively speeds the development

review process while maintaining land use coordination and environmental protection and whether that leads to administrative costs savings for project applicants and King County.

B. The expected benefits from the demonstration projects include: the use of innovative design and development techniques to promote sustainable communities, reduced impervious surface areas for site infrastructure; a greater use of recycled-content building materials and more efficient use of energy and natural resources; and the opportunity to identify and evaluate potential substantive changes to land use development regulations that support the development of sustainable and affordable housing.

C. A request by the applicant to modify or waive development standards for the development proposals shall be evaluated by the department of permitting and environmental review based on the criteria in subsection J. of this section. A request shall first be either approved or denied administratively and may be further reviewed as described in subsection H.3. of this section. Approval or denial of the proposed modification or waiver shall not be construed as applying to any other development application either within the demonstration project area or elsewhere in the county.

D. A modification or waiver approved by the department of permitting and environmental review in accordance with this section shall be in addition to those modifications or waivers that are currently allowed by this title. The proposed modifications or waivers to development regulations that may be considered regarding sustainable communities and housing demonstration projects shall include only the following chapters and related public rules:

1. Drainage review requirements: K.C.C. chapter 9.04 and the Surface Water Design Manual;

2. King County road standards: K.C.C. chapter 14.42 and the county road standards, 2007 update;

3. Density and dimensions: K.C.C. chapter 21A.12;

4. Design requirements: K.C.C. chapter 21A.14;

5. Landscaping and water use: K.C.C. chapter 21A.16;

6. Parking and circulation: K.C.C. chapter 21A.18;

7. Signs: K.C.C. chapter 21A.20;

8. Critical areas: K.C.C. chapter 21A.24, if the modification results in a net improvement to the functions of the critical area; and

9. Landscape installation timing: K.C.C. chapters 27A.30 and 27A.40.

E. A demonstration project authorized by this section may contain residential and limited nonresidential uses subject to the following:

1. The demonstration project may include any residential uses as allowed as a permitted use in the R12 - 48 zones, subject to any development conditions in K.C.C. 21A.08.030, without the need to request a modification or waiver as described in subsection H. of this section. The applicant may request a modification or waiver of any of the development conditions for residential uses contained in K.C.C. 21A.08.030, subject to the review process described in subsection H. of this section and the criteria in subsection J. of this section;

2. The demonstration project may include, as part of a residential project, any nonresidential use allowed as a permitted use in the NB zone under K.C.C. 21A.08.030, 21A.08.040, 21A.08.050, 21A.08.060 and 21A.08.070, subject to any development conditions contained in those sections without the need to request a modification or waiver as described in subsection H. of this section, except the following uses are not allowed:

a. automotive parking;

b. automotive repair and automotive service, K. C.C. 21A.08.050;

c. commuter parking lot, K.C. C. 21A.08.060 , unless as part of a transit-oriented development. For the purposes of this subsection E.2.c., "transit-oriented development" means a development that is designated as a transit-oriented development in an agreement with the county and that includes the construction of new housing units at or within one quarter mile of a county transit center or park and ride lot;

d. gasoline service stations as defined in K.C.C. 21A.08.070;

e. off-street required parking lot commercial and industrial accessory uses;

f. private stormwater management facility;

g. self-service storage; and

h. vactor waste receiving facility.

3. The nonresidential uses shall be no greater than three thousand square feet per use, with a total maximum of all nonresidential uses not to exceed ten percent of the area of the demonstration project site or twenty thousand square feet, whichever is smaller. The applicant may request a modification or waiver of the development conditions for nonresidential uses in K.C.C. 21A.08.030, 21A.08.040, 21A.08.050, 21A.08.060 and 21A.08.070, subject to the review process described in subsection H. of this section and the criteria in subsection J. of this section.

F. A demonstration project authorized by this section allows a residential basics program for townhouse and apartment building types, consistent with the department of permitting and environmental review public rules chapter 16-04: residential basics program.

G. All related review processes such as subdivision, building permit, inspection and similar processes for a demonstration project shall be expedited if:

1. fifty percent or more of all residential units proposed for the demonstration project are affordable to households at eighty percent of area median income, as defined by Department of Housing and Urban Development income guidelines for King County and below; or

2. seventy percent or more of all residential units for the demonstration project are affordable to households at eighty to one hundred fifteen percent of area median income, as defined by Department of Housing and Urban Development income guidelines for King County.

H.1. Requests for a modification or waiver made in accordance with this section may only be submitted in writing in relation to the following types of applications:

a. a site development permit;

b. a binding site plan;

c. a building permit;

d. a short subdivision; or

e. a subdivision.

2. Requests shall be submitted to the department in writing before or in conjunction with an application for one or more of the permits listed in subsection H.1. of this section, together with any supporting documentation. The supporting documentation must illustrate how the proposed modification meets the criteria in subsection J. of this section.

3. Except for an applicant's request for a modification or waiver submitted in conjunction with an application for a subdivision, the notice of application, review and approval of a proposed modification or waiver shall be treated as a Type 2 land use decision in accordance with K.C.C. 20.20.020. The request for a modification or waiver submitted in conjunction with an application for a subdivision shall be treated as a Type 3 land use decision in accordance with K.C.C. 20.20.020.

4. A preapplication meeting with the applicant and the department of permitting and environmental review to determine the need for and the likely scope of a proposed modification or waiver is required before submittal of such a request. If a modification

or waiver requires approval of the department of natural resources and parks or the department of transportation that department shall be invited to participate in the preapplication meeting.

5. If the applicant requests an adjustment from the county drainage standards, the director of the department of permitting and environmental review shall refer the request to the department of natural resources and parks for decision under K.C.C. chapter 9.04, with the right to appeal within the department of natural resources and parks as provided in K.C.C. 9.04.050.C.6. The department of natural resources and parks shall consider the purposes of this demonstration ordinance as a factor relative to the public interest requirement for drainage adjustments described in K.C.C.9.04.050.C.

6. If the applicant requests a variance from the county road standards, the director shall refer the request to the county road engineer for decision under K.C.C. 14.42.060, with the right to appeal within the department of transportation as provided in K.C.C. 14.42.060 and the associated public rule. The department of transportation shall consider the purposes of this demonstration ordinance as a factor relative to the public interest requirement for road variances described in K.C.C. 14.42.060.

7. Administrative appeals of modifications or waivers approved by the director shall be combined with any appeal of the underlying permit decision, if the underlying permit is subject to appeal.

I. An approved development proposal for any of the applications listed in subsection H.1. of this section, including site plan elements or conditions of approval may be amended or modified at the request of the applicant or the applicant's successor in interest designated by the applicant in writing. The director may administratively approve minor modifications to an approved development proposal. Modifications that result in major changes as determined by the department or as defined by the approval conditions shall be treated as a new application for purposes of vesting and shall be reviewed as applicable to the underlying application pursuant to K.C.C. 20.20.020. Any increase in the total number of dwelling units above the maximum number set forth in the development proposal permit or approval shall be deemed a major modification. The county, through the applicable development proposal permit or approval conditions, may specify additional criteria for determining whether proposed modifications are major or minor. The modifications allowed under this section supersede other modification or revision provisions of K.C.C. Title 16 and Title 19A and this title.

J.1. To be eligible to use the provisions of this section, a demonstration project must be located on a demonstration project site identified in Ordinance 16650, section 2, and the applicant has accepted the site as a King County sustainable communities and housing demonstration project.

2. Proposals to modify or waive development regulations for a development application must be consistent with general health, safety and public welfare standards, and must not violate state or federal law.

3.a. Applications must demonstrate how the proposed project, when considered as a whole with the proposed modifications or waivers to the code, will meet all of the criteria in this subsection J., as compared to development without the modification or waiver, and:

(1) achieves higher quality urban development;
(2) provides quality infill development;
(3) optimizes site utilization; and
(4) enhances pedestrian experiences and sense of place and community.

b. Any individual request for a modification or waiver must meet two or more of the following criteria:

(1) contributes to the creation of a sustainable community, which includes

features such as a connected street network, a mix of housing types, pedestrian or bike routes throughout the development, direct bus connections, no front garages, and front porches.

(2) uses the natural site characteristics to protect the natural systems;

(3)(a) contributes to achievement of a three-star rating for the project site under the Built Green Communities program administered by the Master Builders Association of King and Snohomish Counties;

(b) contributes to achievement of a four-star or higher rating for the single family units under the Built Green program administered by the Master Builders Association of King and Snohomish Counties or achieve a gold certification under the U.S. Green Building Council, LEED program or equivalent program; or

(c) contributes to achievement of a four-star or higher rating for the multifamily units under the Built Green program administered by the Master Builders Association of King and Snohomish Counties or achieve a gold certification under the U.S. Green Building Council, LEED program or other equivalent program; and

(4) provides attractive, well-designed development that will assist in improving safety and preventing crime in the development and surrounding area, including adequate outdoor lighting along walkways/trails, walkways/trails 5' or wider and low vegetation along walkways/trails.

4. The criteria in this subsection supersede other variance, modification or waiver criteria and provisions of K.C.C. Title 21A.

K. Regulatory modification and waiver applications, or both, authorized by this section shall be filed with the department of permitting and environmental review within three years of the approval of the development proposal, which includes issuance of a building permit or site development permit, recording of a plat, short plat or binding site plan, or by such a later date as may be specified in the conditions of any development approval for any type of modification or waiver for which the opportunity for future application is expressly granted in those conditions. Modifications or waivers contained within an approved development proposal are valid as long as the underlying permit or development application approval is valid. If modifications or waivers are approved as separate applications, they must be incorporated into a valid permit or development application within three years of approval of the development proposal. The director may extend the date for filing the demonstration project permit and development applications for a maximum of twelve months. Any deadline in this subsection shall be adjusted to include the time for appeal of all or any portion of the project approval. (Ord. 17420 § 123, 2012: Ord. 16702 § 6, 2009: Ord. 16650 § 1, 2009).

21A.55.105 Regional motor sports facility – master planning process demonstration project.

A. The purpose of the master planning process demonstration project is to:

1. Create a comprehensive but streamlined process for the review of major land use proposals that will be developed over the course of several years by:

a. utilizing a concise timeline for project review that incorporates a process for public outreach and input during project review and facility operation;

b. executing a development and operating agreement, pursuant to RCW 36.70B.170 that establishes:

(1) a clearly defined project through a master development plan, which shall include a master site plan;

(2) requirements that must be met before approval of each phase of development; and

(3) operating standards governing all aspects of the project's operation, including, but not limited to, noise and traffic, hours and days of operation for racing, nonracing uses and number and types of events; and

c. establishing a process that ensures timely and efficient review;

2. Utilize the hearing examiner, as authorized in K.C.C. 20.24.520, to function as a special master for the purpose of fact finding and reporting on compliance by the applicant with the executed development and operating agreement, as provided in subsection S. of this section; and

3. Provide for ongoing monitoring of the executed development and operating agreement by the council to ensure continued future compliance with the executed development and operating agreement.

B. The master planning process demonstration project shall be implemented only for a regional motor sports facility only on the Pacific Raceways property as described in Attachment A to Ordinance 17287*.

C. The master planning demonstration project shall be initiated by the applicant making a written request to the department for a preapplication meeting to identify the requirements necessary for a complete application under this section.

D. A master planning proposal application shall be considered complete when the following information and studies have been submitted and are adequate to review the proposal:

1. A proposed development plan that describes the nature, size and scope and phasing of all proposed activities;

2. A proposed site plan that identifies the location and dimensions of proposed racing surfaces, access roadways, parking areas, buildings, stormwater facilities, sewage treatment or holding facilities and any off-site traffic improvements;

3. A proposed master drainage plan under the surface water design manual;

4. A proposed grading plan that identifies or includes:

(a) land contours;

(b) soil types; and

(c) phasing;

5. Proposed development conditions relating to:

(a) on-site vehicle circulation and off-site traffic control measures;

(b) protection for critical areas, especially adjacent to Soosette creek;

(c) stormwater flow control and water quality treatment;

(d) visual screening from adjoining residential properties;

(e) ongoing monitoring and reporting to measure compliance with the development and operating agreements;

(f) fire protection; and

(g) water supply and service;

6. Proposed operating conditions that specify:

(a) days and hours of operation;

(b) frequency of events;

(c) types of activities, including types of motor vehicles; and

(d) maximum noise levels; and

7. Any necessary information identified through the preapplication process.

E. The development and operating agreement shall contain development standards and operating conditions related to the development and operation of the site and shall include, but shall not be limited to:

1. A master site plan and detailed conditions establishing the:

a. location and scope of proposed land uses;

b. location and size of buildings and structures such as grandstands;

c. layout and dimensions of racing surfaces and circulation roadways;

d. site elevations and contours established by a master grading plan;

e. excavation and processing of materials, including dust control, during construction of the facilities;

f. location and dimensions parking areas;

g. location of stormwater facilities, sewage treatment facilities, water, and related features; and

h. vegetative screening required in subsection F.1. of this section;

2. A master drainage plan consistent with the surface water design manual;

3. A project phasing plan, including threshold requirements that must be met before approval of the next phase of development;

4. Specified types of racing and nonracing activities, and where on the site the activities can occur;

5, Specified days and times for all racing and nonracing uses;

6. Specified noise levels for racing and nonracing uses, including but not limited to, how noise levels will be measured and mitigated;

7. Specified on-site vehicle circulation and other traffic control measures to reduce the impact of congestion on roadways in the vicinity of Pacific Raceways;

8. Specified development conditions to ensure that permitted alterations provided for in subsection G. of this section achieve the appropriate level of protections;

9. Specified development conditions to ensure that stormwater flow control and water quality treatment provided for in subsection H. of this section is achieved;

10. Specified regular ongoing monitoring and reporting to measure compliance with the development and operating agreement requirements relating to noise, traffic, air quality, groundwater quality, stormwater flow control and water quality treatment and water volume and quality in Soosette creek;

11. Specified process for the receipt and evaluation by the department of inquiries and complaints relating to the operation of the facility, in order to allow for review by the hearing examiner as provided in subsection S. of this section; and

12. Specified enforcement mechanisms to address any violations of the conditions of the development agreement, including, but not limited to, the following:

a. a process for monitoring condition violations and for receipt of complaints;

b. a process for expedited review and remedy of possible violations; and

c. a penalty schedule that recognizes the nature and impact of the violation and is sufficient to deter violations that otherwise result in financial benefit to the facility, including, but not limited to, revocation of operating permit and loss of specific days of operation.

F. All development under the master plan shall be subject to the following standards relating to screening and building setbacks: as provided in K.C.C. 21A.16.030.F, to the maximum extent practical, buildings and other structures shall be constructed on the project to be shielded from view from adjoining residential properties using methods that may include, but are not limited to:

1. Retention of existing vegetation; and

2. Placement of new vegetation to augment existing vegetation.

G.1. Except as otherwise provided in this subsection G.2. of this section, all development under the master plan shall comply with K.C.C. chapter 21A.24.

2. The department may approve alterations to critical areas, critical areas buffers and critical area setbacks that are not otherwise allowed as an alteration exception under K.C.C. 21A.24.070 when the applicant demonstrates that:

a. the proposal does not pose an unreasonable threat to the public health, safety or welfare on or off the site;

b. the proposed impacts to critical areas, critical area buffers and critical area setbacks shall be controlled and compensated for in accordance with the requirements of K.C.C. 21A.24.125;

c. for proposed alterations within steep slope or landslide areas:

(1) the alterations are necessary to bring existing racing or access road surfaces into compliance with applicable racing association safety standards, or to construct noise barriers or for the placement of spectator seating on the interior portion of the road course; and

(2) the alterations can be constructed to maintain the stability of the hazard area through the use of structural mitigations identified through a geotechnical analysis by a licensed and qualified geotechnical professional; and

d. for proposed alterations to wetlands or aquatic areas and their buffers:

(1) the alterations are necessary to comply with applicable racing association safety standards either for existing racing surfaces or for providing to emergency vehicles access roads to the existing racing surfaces;

(2) there is no feasible alternative to the development proposal with less adverse impact on the critical area;

(3) the alteration is the minimum necessary to accommodate the development proposal;

(4) the alternation has the least possible adverse impact on the critical area and critical area buffer;

(5) the critical area is not used as a salmonid spawning area;

(6) the director may only approve an alteration in a category III or IV wetland; and

(7) the alterations to any wetland shall be mitigated in accordance with an approved mitigation plan by relocating the wetland into a new wetland, with equivalent or greater functions, or into an existing wetland at the ratios specified in K.C.C. 21A.24.340 based on the type of mitigation measures proposed.

H. Uses proposed under the master planning proposal shall comply with the King County surface water design manual and shall:

1. Use enhanced basic water quality measures to treat stormwater and use stormwater infiltration facilities to manage stormwater to protect aquatic life in Big Soos and Soosette creeks and operation of the Soos Creek Hatchery, while protecting groundwater quality. The department shall consider the proposed use in determining whether spill control or special oil control measures in excess of the King County surface water design manual requirements are necessary to achieve the required environmental protections;

2. Specify and require facilities and best management practices to insure that auto-related fluids, brake dust, and other products are properly managed and disposed of to avoid contamination of soils, surface water and groundwater;

3. Develop and implement a water quality monitoring plan to assure that copper, other metals, hydrocarbons and other contaminants are not elevated in ground and surface waters on- site and in Big Soos and Soosette creeks;

4. Conduct flow monitoring in Big and Soosette creeks before, during and after construction to ensure that normal or preexisting flows are being maintained.

5. Conduct biotic monitoring in Big Soos and Soosette creeks before, during and after construction;

6. If the department determines it to be environmentally beneficial and if it is in compliance with the surface water design manual requirements for discharge to the natural location and is approved through an adjustment, channel surface water from impervious surfaces, including buildings, structures, pit areas or raceways to drain away

from Soosette creek and evaluate any impacts to Big Soos and Soosette creeks and to the alternative discharge location; and

7. Develop and implement an adaptive management program to correct any flow, surface or ground water quality, or biotic problem in Big Soos or Soosette creeks caused by the development.

I. Site development that entails extraction and grading of soils to achieve the final site contours for development shall be subject to the following limits:

1. The amount of materials that may be extracted during any specific phase of project construction shall be only as necessary to construct that phase of the project approved for construction; and

2. The on-site processing of the extracted materials shall be limited to the sorting of the material into separate dirt, sand and gravel components.

J. The master planning proposal shall include site designs and features to reduce the level of noise impacts upon nearby residential neighborhoods.

K. The department shall:

1. Schedule and conduct a preapplication meeting with applicant within thirty days of the request for such a meeting by the applicant in order to identify the full range of potential issues related to the proposed expansion of Pacific Raceways and to specifically list information or studies needed to adequately evaluate the listed issues.

2. Provide to the applicant a detailed listing of all project issues and necessary information or studies required under subsection D. of this section within thirty days after the date of the preapplication meeting;

3. Accept for filing a master planning proposal application submitted by the applicant only if it provides the information and studies required by subsection K.2. of this section;

4. Determine whether the master planning proposal is a complete application under this section and K.C.C. 20.20.050;

5. Provide a notice of a complete application under K.C.C. 20.20.060.B. In addition to notice required under K.C.C. 20.20.060.B, the department shall provide mailed notice to:

a. all parties of record, including community groups or organizations, established during the review of Conditional Use Permit File Nos. A-71-0-81 and L08CU006, Proposed Ordinance 2010-0189* or Ordinance 17287;

b. persons requesting notification of any county land use action regarding Pacific Raceways; and

c. residents or property owners of parcels located within twenty-five hundred feet of the boundaries of the Pacific Raceways site;

6. Not later than seven days after the applicant has filed with the department its master planning proposal, issue a determination of significance and proceed with the environmental review of the master planning proposal under Ordinance 17287, Section 6;

7. Conduct one or more public meetings on the master planning proposal application to gather information and public input on all aspects of the master planning proposal. The first meeting shall be held within thirty days after the applicant has filed its master planning proposal application with the department and may be combined with a public meeting required under Ordinance 17287, Section 5.D.4. At that public meeting, the applicant shall present its master planning proposal. At each public meeting, the public shall be provided an opportunity to comment on the master planning proposal. The department shall record all public meetings and make a written summary of the meetings available on its website within fourteen days after the meeting. The department may hold additional public meetings as it conducts its review of the master

planning proposal application and shall provide an opportunity for the applicant to respond to questions at each public meeting;

8. Issue the final environmental impact statement within eighteen months of either issuing to the applicant a notice of complete application or the master planning proposal is deemed a complete application under K.C.C. 20.20.050.B. The consultant may request additional time to prepare the final environmental impact statement;

9. Not later than thirty days after the final environmental impact state is issued, propose for public review and comment a development and operating agreement consistent with this section. The department shall provide notice of the proposed development and operating agreement in the same manner as it provided the notice of application under subsection K.5. of this section. The department shall present the proposed development and operating agreement at a public meeting within fourteen days after the notice is provided under this subsection K.9; and

10. Within sixty days after the public meeting required by subsection K.9. of this section:

a. transmit to the hearing examiner the department's recommended development and operating agreement, together with a proposed ordinance authorizing the executive to execute the development and operating agreement;

b. publish its recommended development and operating agreement on the department's website; and

c. provide notice of its recommended development and operating agreement in the same manner as it provided the notice of application under subsection K.5.a. through c. of this section and to those governmental agencies listed in K.C.C. 20.20.090.A. The notice shall also advise :

(1) that the department's recommendation is subject to an open record public hearing before the hearing examiner;

(2) the date that the department's recommendation has been transmitted to the hearing examiner; and

(3) that interested persons may appear as parties at the open record public hearing by filing a notice of appearance with the hearing examiner within fourteen days of the date that the department's recommendation has been transmitted to the hearing examiner. The applicant will be presumed to be a party without having to file a notice of appearance.

L.1. Before the transmittal of the department's recommended development and operating agreement to the hearing examiner, the transportation, economy and environment committee or its applicable successor may request reports or briefings from the department and applicant regarding how the demonstration project is proceeding. The department shall solicit input from those identified in subsection K.5.a. through c. of section to inform the committee in the report and briefing.

2. If the department or the applicant is unable to meet a timeline established by this section as part of the process for review of the master planning proposal, the department shall provide written notice to the council within fourteen days after the missed deadline in the form of a letter to the chair of transportation, economy and environment committee or its applicable successor describing the causes for the delay, and the steps or actions needed to be taken by the department or the applicant to continue timely processing of the proposal.

M.1. No sooner than fourteen days after receiving the department’s recommended development and operating agreement, the hearing examiner shall set the date for the prehearing conference and notify the parties of interest.

2. Unless otherwise agreed to by those that appear as parties, the hearing examiner shall conduct an open record public hearing within ninety days of the

prehearing conference and, if necessary, shall hold the public hearing over consecutive days.

3. When the hearing examiner sets the department's recommended development and operating agreement for an open record public hearing, the department shall coordinate and assemble the reviews of other departments and governmental agencies having an interest in the application and shall prepare a report summarizing the factors involved and the department's recommendation. At least fourteen calendar days before the scheduled hearing, the department shall file the report with the hearing examiner and mail copies to those identified in subsection K.5.a. through c. of section.

4. The hearing examiner's recommendation may be to approve or reject the department's recommended development and operating agreement, or the examiner may recommend that the council adopt the department's recommended development and operating agreement with such conditions, modifications and restrictions as the examiner finds necessary to carry out applicable state laws and regulations and the regulations, including chapter 43.21C RCW, policies, objectives and goals of the Comprehensive Plan, the zoning code K.C.C. Title 21A and other laws, policies and objectives of King County.

5. Within fourteen days after the conclusion of the open record public hearing, the hearing examiner shall issue a written recommendation and shall transmit a copy thereof to all persons who appeared as parties in the open record public hearing. The recommendation shall include findings of fact and conclusions from the record that support the decision and the findings and conclusions shall set forth and demonstrate the manner in which the recommendation is consistent with, carries out and helps implement applicable state laws and regulations, the regulations, policies, objectives and goals of the comprehensive plan and Ordinance 17287.

6. To appeal the hearing examiner's recommendation, an aggrieved party must file a notice of appeal with the clerk of the council within fourteen days of the date of the mailing of the hearing examiner's recommendation. The clerk shall notify the hearing examiner and the parties of record to the hearing examiner's open record public hearing in writing of the council's receipt of the appeal. The clerk shall also cause to have posted on the council's web page the notice of the appeal. The appellant shall file a statement of appeal with the clerk within twenty-one days of filing its notice of appeal, together with proof of service of the statement of appeal to the other parties of record. The statement of appeal must specify the basis for the appeal and any arguments in support of the appeal. Failure to file a statement of appeal shall result in the dismissal of the appeal. The clerk shall cause to have the statement of appeal posted on the council's web page. Any written responsive statements or arguments to the appeal, together with proof of service on the other parties of record, must be filed with the clerk within fourteen days after the filing of the statement of appeal. The clerk shall cause to have these responsive statements and arguments posted on the council's webpage.

7. At least fourteen days before the closed record hearing by the council of the appeal, the clerk will provide the parties of record with written notice of the hearing time and date. The council's consideration of the appeal shall be based upon the record as presented to the hearing examiner at the open record public hearing and upon written appeal statements and arguments submitted by the parties that are based on the open record public meeting. The council may allow the parties to the appeal a period of time for oral argument based on the record. Consistent with RCW 36.70B.020(1), before or at the appeal hearing and upon the request of the council, county staff may provide a written or oral summary, or both, of the appeal record, issues and arguments presented in an appeal and may provide answers, based on the record, to questions with respect to issues raised in an appeal asked by council members at the appeal hearing. Nothing

in this subsection shall be construed as limiting the ability of the council to seek and receive legal advice regarding a pending appeal from the office of the prosecuting attorney or other county legal counsel either within or outside of the hearing.

8. If, after consideration of the record, written appeal statements and any oral argument the council determines that:

a. An error in fact or procedure may exist or additional information or clarification is desired, the council shall remand the matter to the hearing examiner for further hearing to receive additional information or further consideration; or

b. The recommendation of the hearing examiner is based on an error in judgment or conclusion, the council may modify or reverse the recommendation of the hearing examiner.

9. a. The council's final action on any recommendation of the hearing examiner shall be by ordinance, which shall include findings of fact and conclusions from the record of the hearing examiner's public hearings. The findings and conclusions shall set forth and demonstrate the manner in which the council's decision is consistent with, carries out and helps implement applicable state laws and regulations, the regulations, policies, objectives and goals of the comprehensive plan and Ordinance 17287. The council may adopt as its own all or portions of the hearing examiner's findings and conclusions.

b. Any ordinance also may contain reasonable conditions, in accordance with state law and county ordinances, which must be satisfied before the ordinance becomes effective. The ordinance shall also designate the time period within which any such conditions must be satisfied. All authority pursuant to such ordinance shall expire if any of the conditions are not satisfied within the designated time period and the property shall continue to be subject to all laws, regulations and zoning as if the ordinance had not been adopted. The council may extend the period for satisfaction of the conditions if, after a public hearing by the examiner, the council finds an extension will be in the public interest and the extension was requested by the applicant within the initial time period.

N. If the hearing examiner's recommendation is not appealed pursuant to subsection M. of this section:

1. The clerk of the council shall place a proposed ordinance that implements the examiner's recommended action on the agenda of the next available council meeting for adoption;

2. No final action to amend or reverse the hearing examiner's recommendation shall be taken at that meeting and notice to parties shall be given before the adoption of a substitute or amended ordinance that amends or reverses the examiner's recommendation;

3. The council may either:

a. Refer the matter to the transportation, economy and environment or its successor for further consideration deemed necessary before the council takes final action on the matter or remand the matter to the hearing examiner for further hearing to receive additional information or further consideration; or

b. Adopt the hearing examiner's recommendation by an ordinance satisfying the requirements of subsection M.9. of this section.

4. Any final action by the county council may be reconsidered by the council pursuant to K.C.C. 20.24.250; and

5. Any appeal of the council's final action shall comply with the requirements of K.C.C 20.24.240.A.

O.1. The design and operating conditions specified in any agreement adopted and executed pursuant to the process established in this section shall prospectively control the operations and design for the site and supersede the design and operating

conditions established under Conditional Use Permit File Nos. A-71-0-81 and L08CU006. However, any such development and operating agreement will not have retroactive effect. Any enforcement actions relating to compliance with the design and operating conditions established under Conditional Use Permit File Nos. A-71-0-81 and L08CU006 regarding activities that occurred before the execution of a development agreement shall not be affected.

2. A master plan development and operating agreement approved by the council shall be in effect for a period of ten years from the effective date of the ordinance approving the master plan development and operating agreement and authorizing the executive to execute the development and operating agreement;

3.a. An approved master plan development and operating agreement may be renewed one time for not more than ten years.

b. The applicant shall apply to the department for renewal of the development and operating agreement at least twelve months before the agreement expires. The department shall provide a notice of the renewal request under subsection K.5.a. through c. of this section and shall conduct at least one public meeting on the request as provided in subsection K.7. of this section.

c. The department shall make its recommendation to the council on the proposed renewal together with any recommended changes to the agreement not later than ninety days before the development and operating agreement expires.

d. If the agreement is not renewed by the council:

(1) the operating conditions established in the agreement shall remain in effect; and

(2) any subsequent development permit application shall be subject to laws in effect at the time the subsequent application is filed.

P. During the period a development and operating agreement is in effect, any subsequent development on the site shall be consistent with the approved development and operating agreement.

Q.1. Except as otherwise provided in subsection Q.2. of this section, the laws in effect on the date the council adopts the ordinance authorizing the execution of the development and operating agreement shall apply to subsequent permits necessary for the uses authorized by the development and operating agreement.

2. The following regulations in effect on the date of a complete application for any permits necessary for a use authorized by the development and operating agreement shall apply:

a. surface water management standards under K.C.C. Title 9;

b. public health and safety codes under K.C.C. Title 13;

c. road standards under K.C.C. Title 14;

c. building codes under K.C.C. Title 16; and

d. fire codes under K.C.C. Title 17.

R. During the effective period of the development and operating agreement, the applicant may request in writing and the department may propose a modification of the development and operating agreement. The applicant's request and the department initiated proposal shall be made by June 1 of each year for implementation in the following year. The department shall provide notice of the request or proposed modification as provided in subsection K.5.a. through c. of this section. The department shall submit to the hearing examiner its recommendation on the request not later than August 1.

S. The hearing examiner shall conduct the following annual monitoring and reporting activities for the council:

1. No later than October 15 of each year, the hearing examiner shall conduct a public meeting in the vicinity of the project site for the purpose of gathering community

input on the operation of facility during the preceding year and on any modifications to the development and operating agreement. The department shall provide a notice of the meeting as provided in subsection K.5.a. through c. of this section.

2. Beginning on December 31 of the year after the effective date of the ordinance authorizing the execution of the development and operating agreement, and for each subsequent year, the hearing examiner shall prepare and submit to the council a report that:

a. describes the current status of the phases of the development;

b. evaluates compliance with development and operation agreement conditions during the preceding year;

c. identifies issues and concerns that have been brought forward by the community, Pacific Raceways and the department;

d. evaluates proposed modifications to the development and operating agreement; and

e. outlines potential steps to ensure compliance with the development and operating agreement.

3. The report shall be presented in a briefing by the hearing examiner to the transportation, economy and environment committee, or its applicable successor, at which the department and project operator shall be present.

T. The director shall submit a report on the master planning demonstration project to the council within sixty days of the council's adoption of the ordinance approving the development and operating agreement. The report shall evaluate the efficacy of the master planning process and may include recommended changes to the master planning process to address problems or deficiencies in the process identified by the department. The department shall solicit comments from the applicant, the hearing examiner, and the public, identified in subsection K.5.a. through c. of this section, on the master planning process and include a synopsis of those comments in the report. A paper copy and an electronic copy of the report shall be filed with the clerk of the council, who shall retain the paper original and shall forward electronic copies to each councilmember. (Ord. 17287 § 3, 2012).

Reviser's notes:
***Available in the King County Archives.**
****Proposed Ordinance 2010-0189 lapsed and failed to become law.**