NE 1/4 SEC. 26, T. 23 N., R. 5 E., W.M.

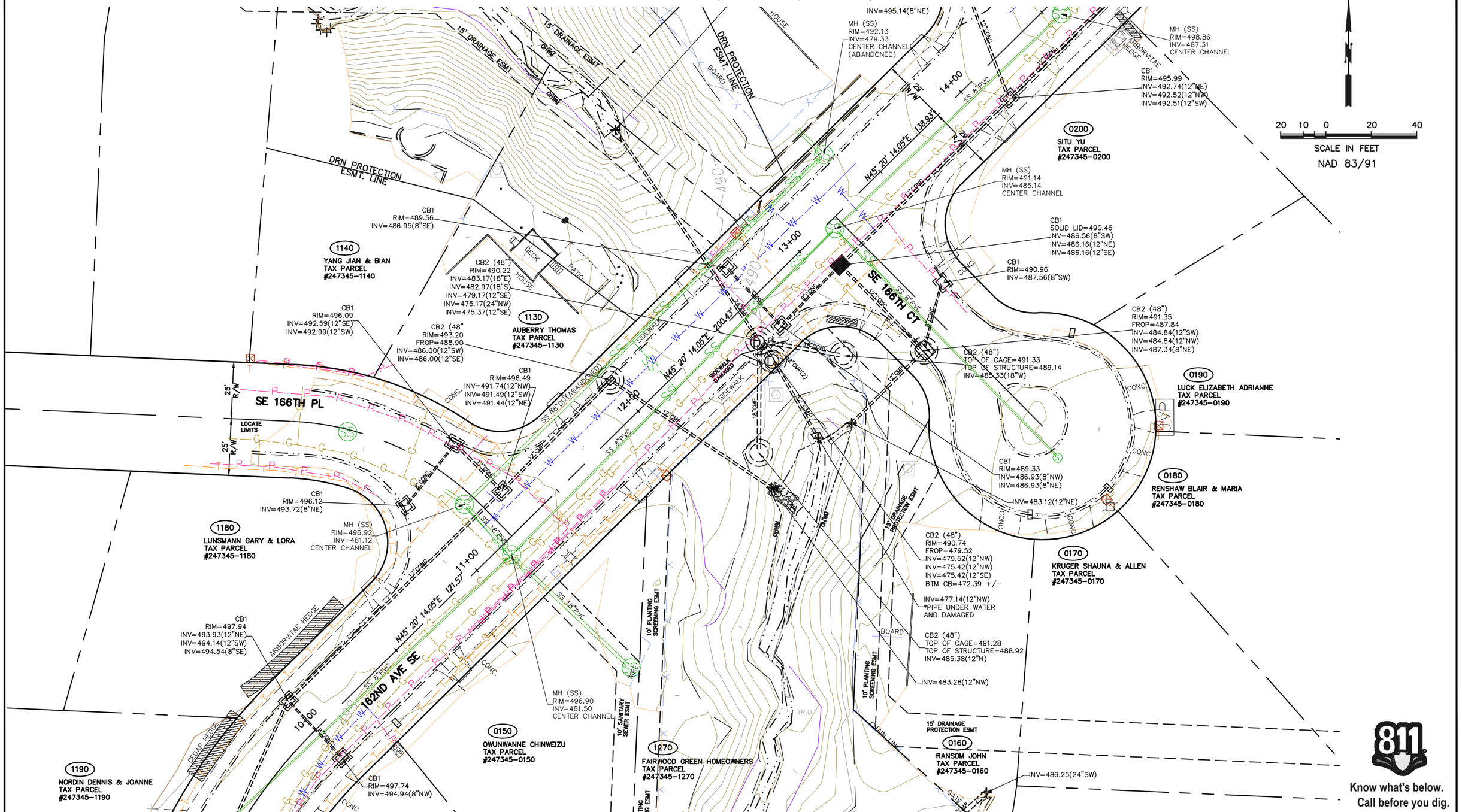

SURVEY JOB NO: 14058	05/2017			
CHECKED: T. CRAY	05/2017			
CAD ENTERED: J. WANG	03/2020			
DESIGNED: J. WANG	03/2020			
CHECKED: J. LYOU	03/2020			
SUPERVISOR: J. CASSIDY	03/2020			
		NUM. REVISION	BY	DATE

JON A. CASSIDY STATE OF WASHINGTON 22498 REGISTERED PROFESSIONAL ENGINEER

FED. AID No. –

PROJECT No. 1130707

MAINTENANCE DIVISION No. 3

TRACKING #

46517(4-2132)

KING COUNTY DEPT. OF LOCAL SERVICES
JOHN TAYLOR, DIRECTOR

162 AVE SE
AT SE 166 CT
CULVERT REPLACEMENT
EXISTING SITE CONDITIONS

King County

SHEET 4 OF 35 SHEETS

320-25(4)

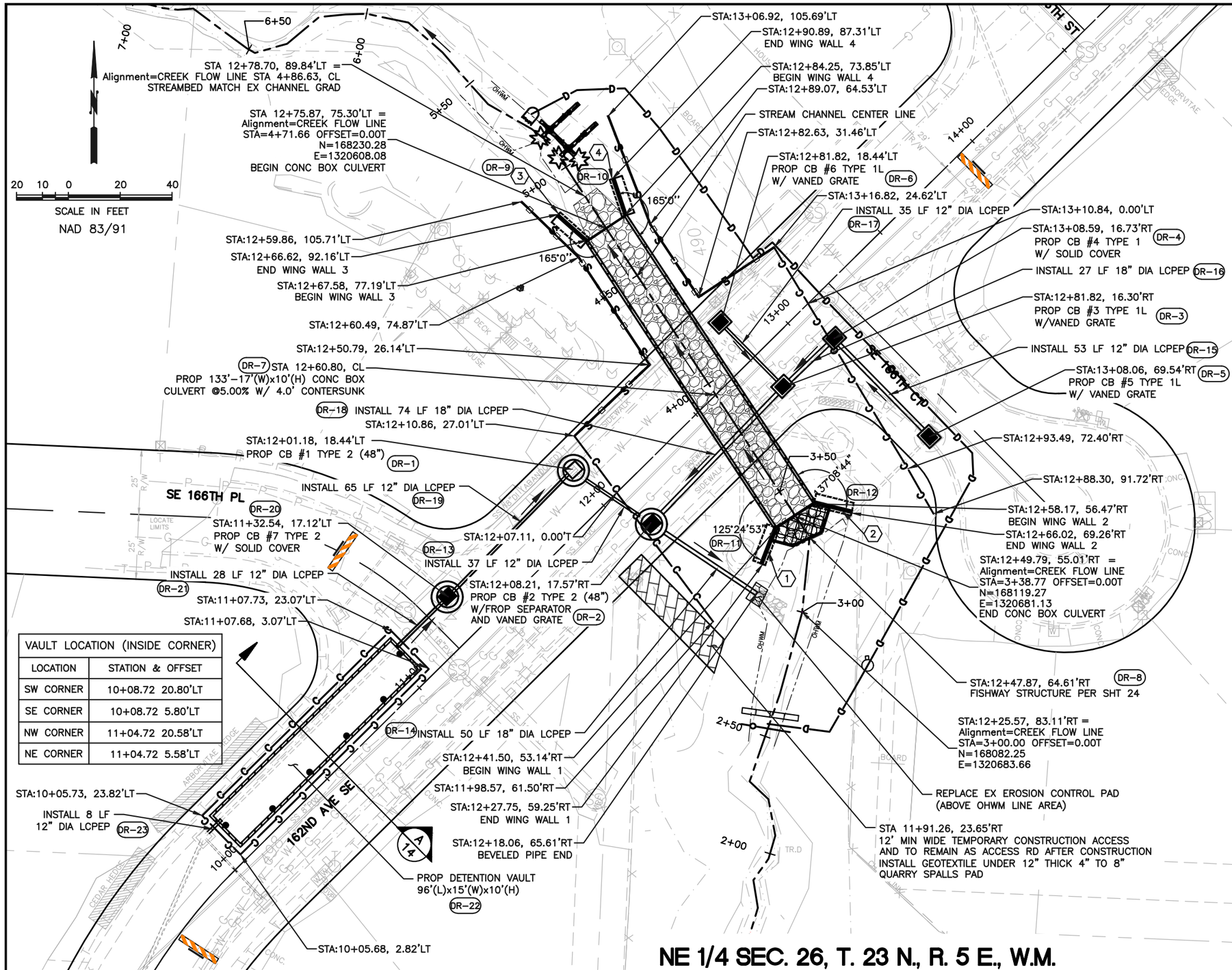

VAULT LOCATION (INSIDE CORNER)	
LOCATION	STATION & OFFSET
SW CORNER	10+08.72 20.80'LT
SE CORNER	10+08.72 5.80'LT
NW CORNER	11+04.72 20.58'LT
NE CORNER	11+04.72 5.58'LT

NE 1/4 SEC. 26, T. 23 N., R. 5 E., W.M.

LEGEND

- CATCH BASIN, TYPE 1L W/ VANED GRATE or TYPE 1 W/SOLID COVER
- CATCH BASIN, TYPE 2 or TYPE 2 W/FROP SEPARATOR
- CONSTRUCTION EXCAVATION LIMITS
- EXCAVATION AND SHORING LIMITS
- FLOW DIRECTIONS
- LCPEP DRAINAGE PIPES
- STREAMBED GRAVEL
- QUARRY SPALLS EROSION CONTROL PAD
- FISHWAY STRUCTURE (PER SHT 24)
- CONCRETE WING WALL
- EXISTING TOP OF SLOPE
- HIGH VISIBILITY FENCE
- CHAIN LINK FENCE
- TEMPORARY FENCE GATE
- SUGGESTED TEMPORARY CONSTRUCTION ACCESS
- STREAM TEMPORARY BYPASS (DETAIL PER SHT 10)
- TEMPORARY AQUA BARRIER (SUGGESTED LOCATION)
- FISH NET (SUGGESTED LOCATION)
- TEMPORARY PLASTIC SHEET (SUGGESTED LOCATION)
- TEMPORARY BYPASS PUMP (SUGGESTED LOCATION)
- BARRICADE TYPE III W/ ROAD CLOSED SIGN (LOCATION PER ENGINEER DIRECTIONS)
- LARGE WOODY DEBRIS (LWD) (DETAIL PER SHT 34)

CONSTRUCTION NOTES

- XX WING WALL NUMBER
- DR-X DRAINAGE STRUCTURE NOTE

CONSTRUCTION NOTES:

1. INSTALL TESC MEASURES BEFORE ANY GROUND EXCAVATION. REFER TO STANDARD TESC PLAN NOTES ON SHEET 10.
2. UPSTREAM EXCAVATION FROM APPROXIMATE STA 3+10 TO STA 4+11 (STREAM CHANNEL CENTER LINE) SHOULD BE FULL OPEN CUT AT 1.5:1 MINIMUM SLOPE; DOWNSTREAM FROM STA 4+11 TO STA 5+10 (STREAM CHANNEL CENTER LINE) EXCAVATION METHOD (SUCH AS SHORING) TO BE DECIDED BY CONTRACTOR AND APPROVED BY KC ENGINEER. ALL EXCAVATION SHALL BE WITHIN EXCAVATION LIMITS SHOWN ON PLAN.
3. LARGE WOODY DEBRIS (LWD) SHOULD BE MINIMUM 18" DIAMETER AND MINIMUM 20FT LONG LOG. CONTRACTOR TO INSTALL LWD PER KC ENGINEER DIRECTIONS USING THE 26" DIA DOUGLAS FIR REMOVED FROM UPSTREAM AND TWO LOGS TRANSPORTED AS LWDs.
4. TEMPORARY STREAM BYPASS AND FISH BLOCK NET INSTALLATION TO BE APPROVED BY ENGINEER.
5. DEWATERING WELL LOCATIONS TO BE APPROVED BY ENGINEER AS NEEDED.
6. SITE RESTORATION AND PLANTING PER SHEET 26-27 AND SHT 32-34.

SURVEY JOB NO:	14058	05/2017
CHECKED:	T. CRAY	05/2017
CAD ENTERED:	J. WANG	03/2020
DESIGNED:	J. WANG	03/2020
CHECKED:	J. LYOU	03/2020
SUPERVISOR:	J. CASSIDY	03/2020

NUM.	REVISION	BY	DATE

JON A. CASSIDY — STATE OF WASHINGTON — 22498 — REGISTERED PROFESSIONAL ENGINEER

FED. AID No. –

PROJECT No. 1130707

MAINTENANCE DIVISION No. 3

TRACKING #

46517(4-2132)

KING COUNTY DEPT. OF LOCAL SERVICES
JOHN TAYLOR, DIRECTOR

162 AVE SE
@ SE 166 CT
CULVERT REPLACEMENT
PROPOSED CULVERT AND VAULT PLAN

King County

SHEET 12 OF 35 SHEETS

320-25(12)

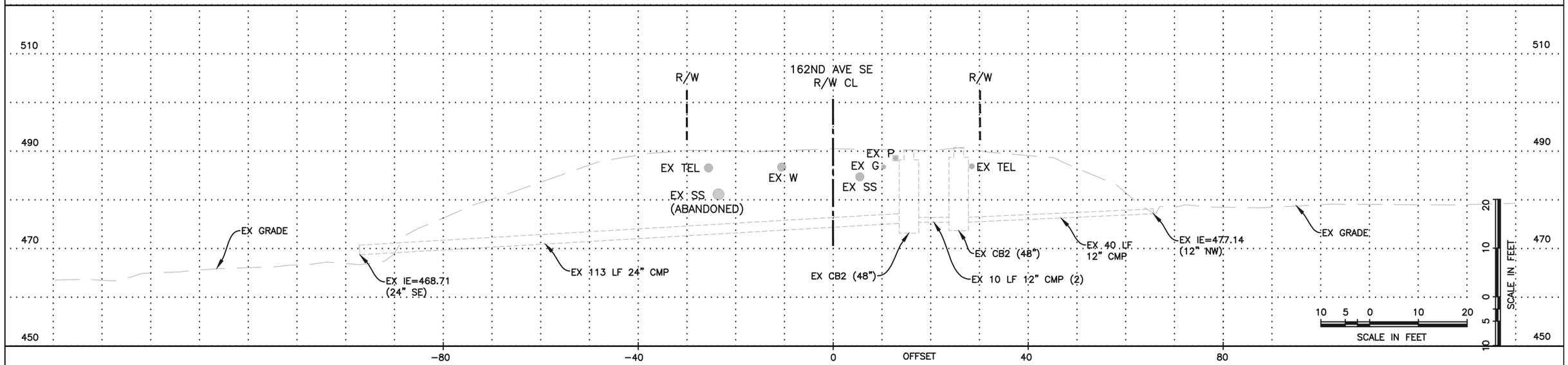

EXISTING CULVERT PROFILE

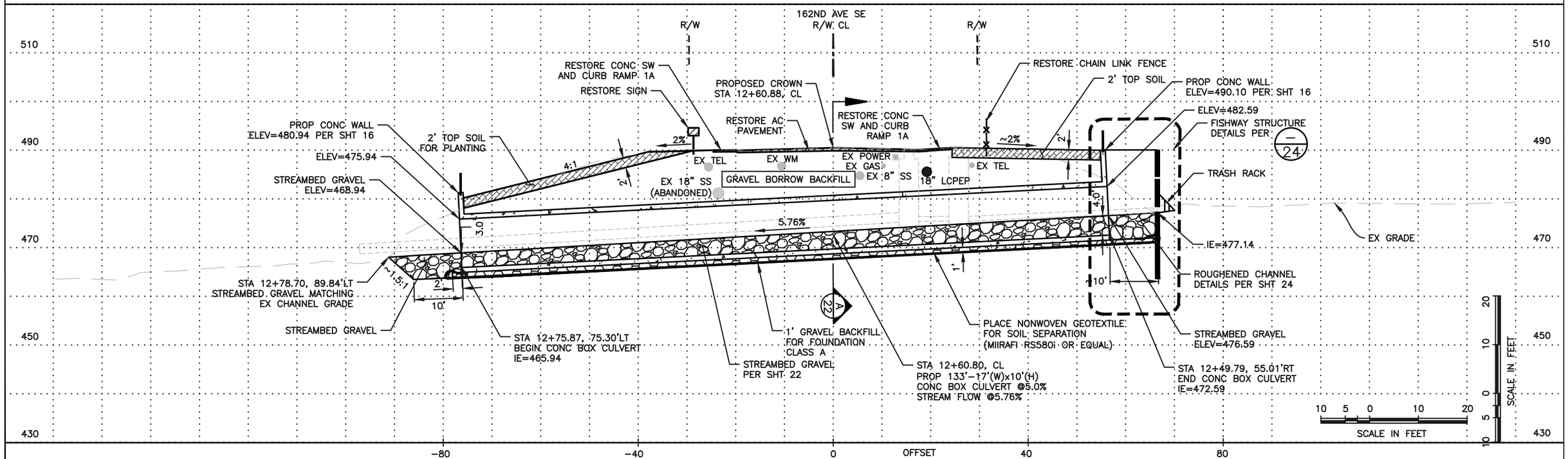

CONCRETE CULVERT PROFILE

SURVEY JOB NO:	14058	05/2017
CHECKED:	T. CRAY	05/2017
CAD ENTERED:	J. WANG	03/2020
DESIGNED:	J. WANG	03/2020
CHECKED:	J. LYOU	03/2020
SUPERVISOR:	J. CASSIDY	03/2020

NUM.	REVISION	BY	DATE

JON A. CASSIDY
STATE OF WASHINGTON
22498
REGISTERED
PROFESSIONAL ENGINEER

FED. AID No. –

PROJECT No. 1130707

MAINTENANCE DIVISION No. 3

TRACKING #

46517(4-2132)

KING COUNTY DEPT. OF LOCAL SERVICES
JOHN TAYLOR, DIRECTOR

162 AVE SE
@ SE 166 CT
CULVERT REPLACEMENT
CULVERT PROFILES

King County

SHEET **13** OF **35** SHEETS

320-25(13)

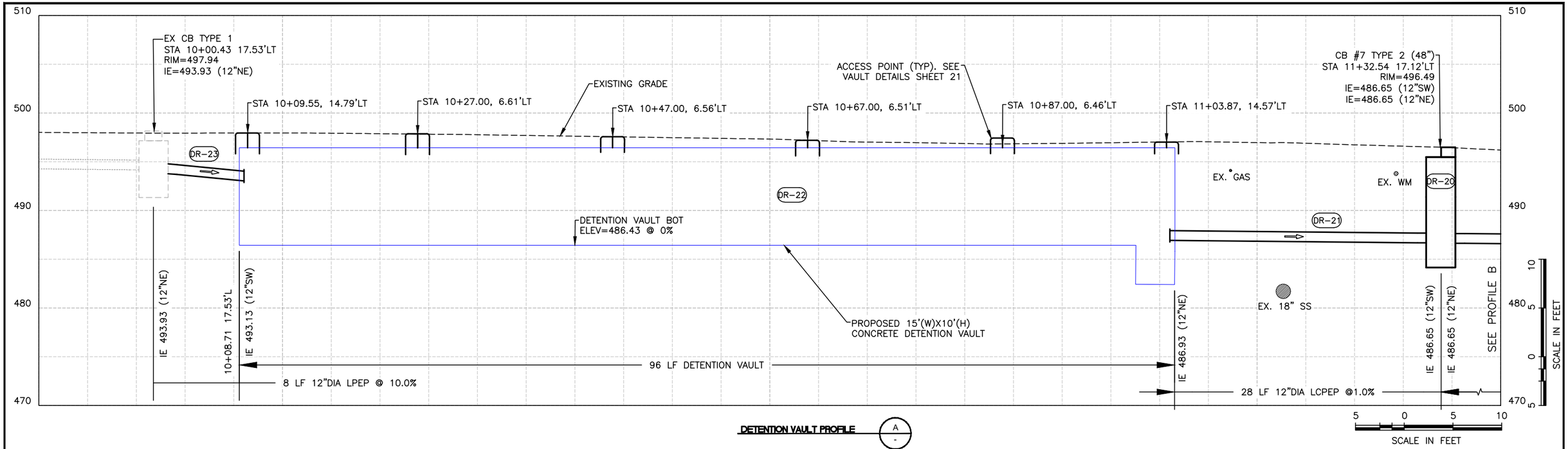

DETENTION VAULT PROFILE (A / -)

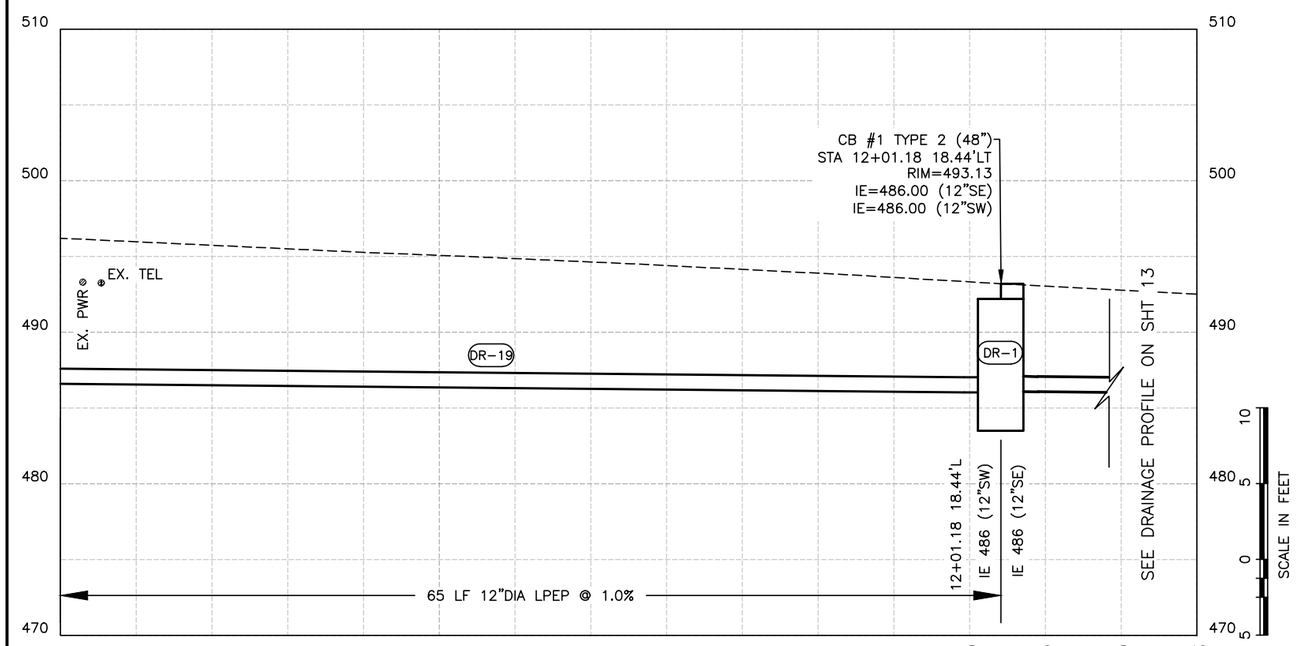

DETENTION VAULT PROFILE (B / -)

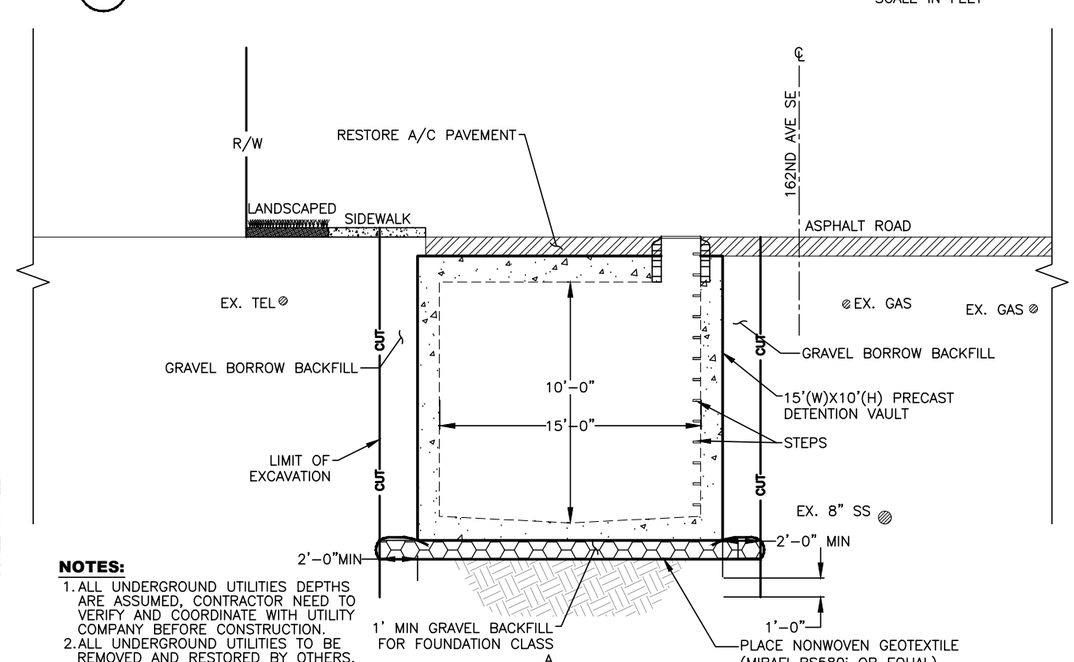

SECTION A–A (A / 12)
NTS

NOTES:

1. ALL UNDERGROUND UTILITIES DEPTHS ARE ASSUMED, CONTRACTOR NEED TO VERIFY AND COORDINATE WITH UTILITY COMPANY BEFORE CONSTRUCTION.
2. ALL UNDERGROUND UTILITIES TO BE REMOVED AND RESTORED BY OTHERS, CONTRACTOR TO COORDINATE WITH THE CONSTRUCTION.

SURVEY JOB NO:	14058	05/2017
CHECKED:	T. CRAY	05/2017
CAD ENTERED:	K. WARD	08/2019
DESIGNED:	R. BARNES	08/2019
CHECKED:	R. BERRYESSA	08/2019
SUPERVISOR:	L. LAI	08/2019

NUM.	REVISION	BY	DATE

RACHEL J. BERRYESSA — STATE OF WASHINGTON — 33743 — REGISTERED PROFESSIONAL ENGINEER

FED. AID No. –

PROJECT No. 1130707

MAINTENANCE DIVISION No. 3

TRACKING #

46517(4-2132)

KING COUNTY DEPT. OF LOCAL SERVICES
JOHN TAYLOR, DIRECTOR

162 AVE SE
AT SE 166 CT
CULVERT REPLACEMENT
PROPOSED VAULT PROFILE AND DETAILS

King County

SHEET 14 OF 35 SHEETS

320-25(14)

NE 1/4 SEC. 26, T. 23 N., R. 5 E., W.M.

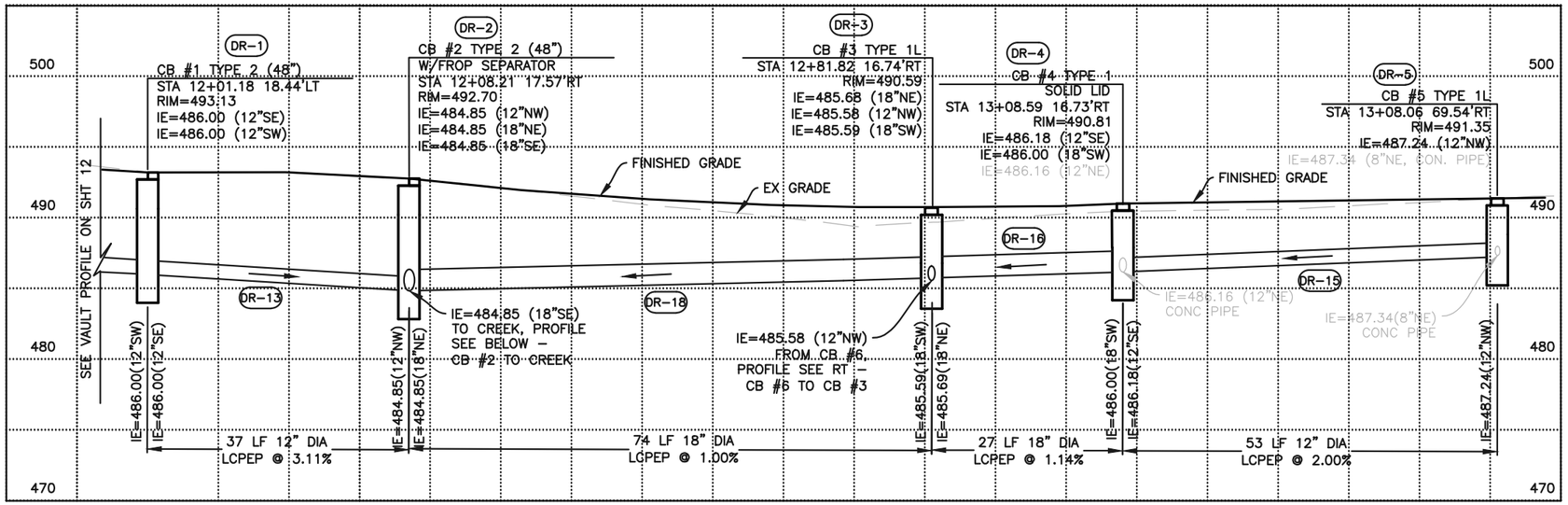

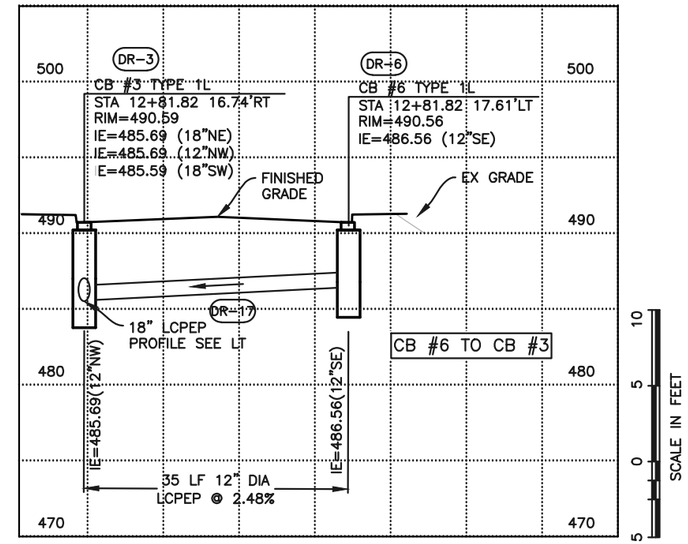

DRAINAGE PIPE PROFILE

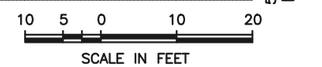

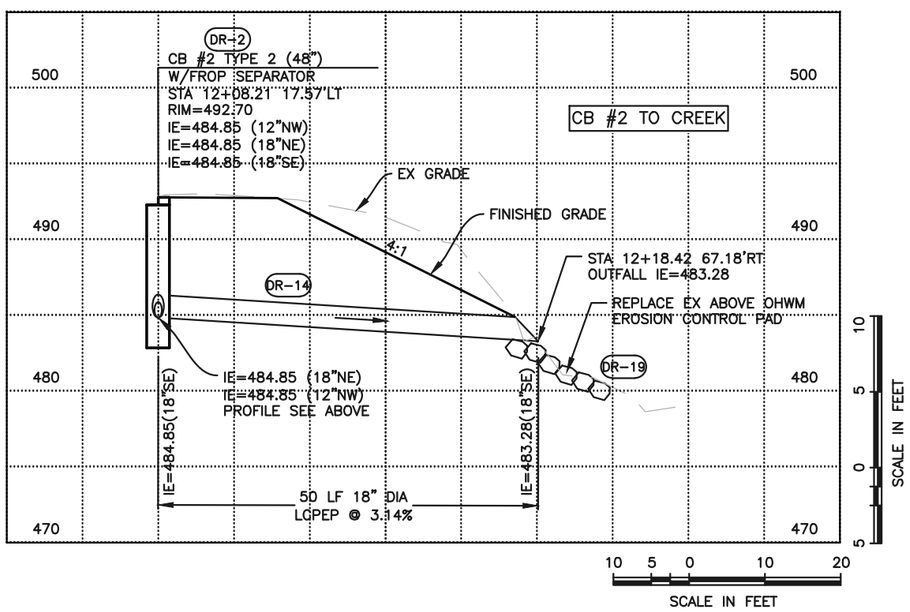

DRAINAGE PIPE PROFILE

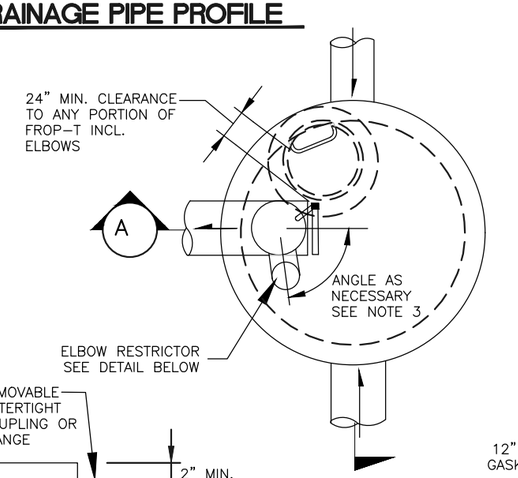

PLAN VIEW

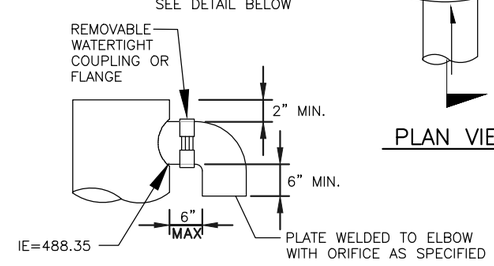

ELBOW RESTRICTOR DETAIL

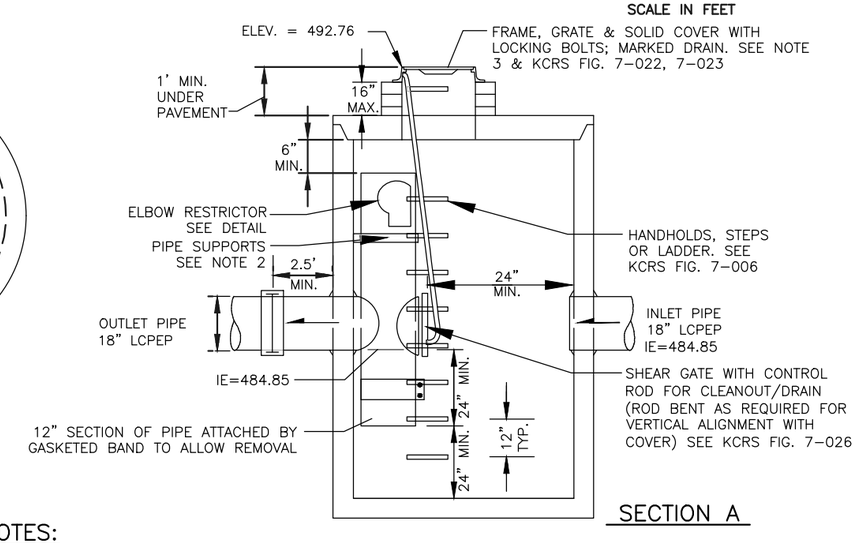

SECTION A

NOTES:

1. METAL PARTS: CORROSION RESISTANT. NON-GALVANIZED PARTS PREFERRED. GALVANIZED PIPE PARTS TO HAVE ASPHALT TREATMENT 1.
2. PROVIDE AT LEAST ONE 3 X 0.090 GAUGE SUPPORT BRACKET ANCHORED TO CONCRETE WALL WITH 5/8 IN. STAINLESS STEEL EXPANSION BOLTS OR EMBEDDED SUPPORTS 2 IN. INTO M/H WALL (VERTICAL SPACING).
3. LOCATE ELBOW RESTRICTOR(S) AS NECESSARY TO PROVIDE MIN. CLEARANCE AS SHOWN.
4. SEE THE WSDOT/APWA STANDARD SPECIFICATIONS SECTION 9-05.15 FOR METAL CASTINGS REQUIREMENTS.

CB #2 DETAILS - TYPE II 48" DIA W/ FROP SEPARATOR

NTS

SURVEY JOB NO:	14058	05/2017
CHECKED:	T. CRAY	05/2017
CAD ENTERED:	J. WANG	03/2020
DESIGNED:	J. WANG	03/2020
CHECKED:	J. LYOU	03/2020
SUPERVISOR:	J. CASSIDY	03/2020

NUM.	REVISION	BY	DATE

JON A. CASSIDY — STATE OF WASHINGTON — 22498 — REGISTERED PROFESSIONAL ENGINEER

FED. AID No. –

PROJECT No. 1130707

MAINTENANCE DIVISION No. 3

TRACKING #

46517(4-2132)

KING COUNTY DEPT. OF LOCAL SERVICES
JOHN TAYLOR, DIRECTOR
162 AVE SE
@ SE 166 CT
CULVERT REPLACEMENT
PROPOSED DRAINAGE PIPE PROFILE AND DETAILS

King County

SHEET 15 OF 35 SHEETS

320-25(15)

NE 1/4 SEC. 26, T. 23 N., R. 5 E., W.M.

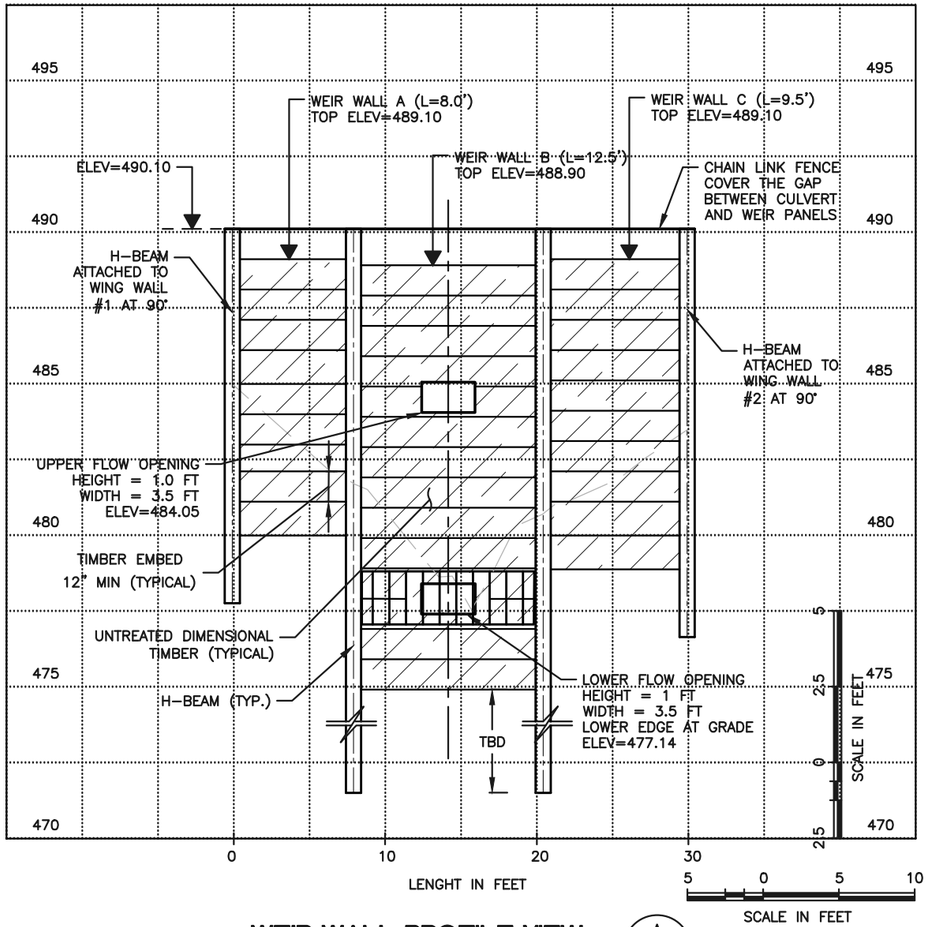

WEIR WALL PROFILE VIEW

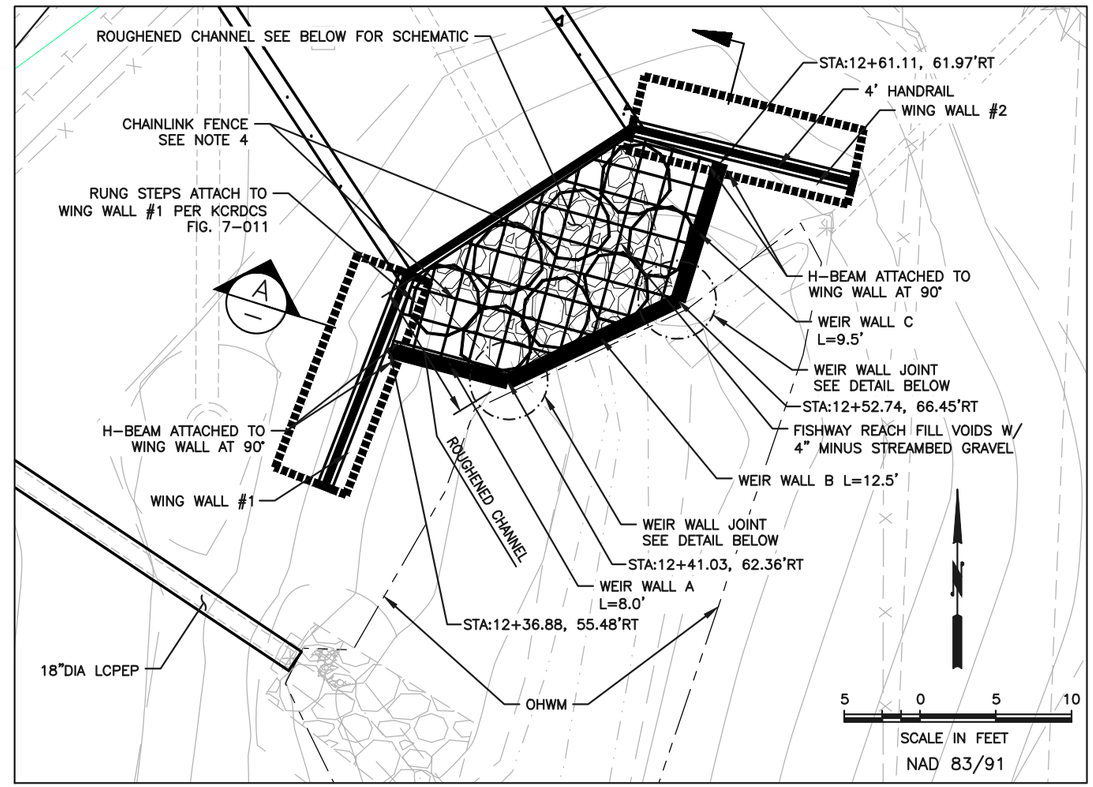

WEIR WALL PLAN VIEW

NOTES:

1. SUBMITTAL SHALL SHOW HOW TIMBER IS ATTACHED TO H-BEAM.
2. CONTRACTOR SHALL SUBMIT SHOP DRAWINGS FOR TRASH RACK.
3. SUBMITTAL SHALL SHOW H-BEAM ATTACHED TO WING WALL.
4. CONTRACTOR TO PROVIDE WEIR STRUCTURE CALCULATIONS, WATER LEAK PROOF, AND SHOP DRAWINGS TO KC ENGINEER FOR APPROVAL.
5. USE CHAIN LINK FENCE W/ PROPER STRUCTURE BAND ANCHORED AT TOP OF CULVERT AND WEIR PANELS TO COVER THE GAP, AND INSTALL LOCKED ENTRANCE AT WING WALL RUNG STEPS AREA FOR MAINTENANCE ACCESS.

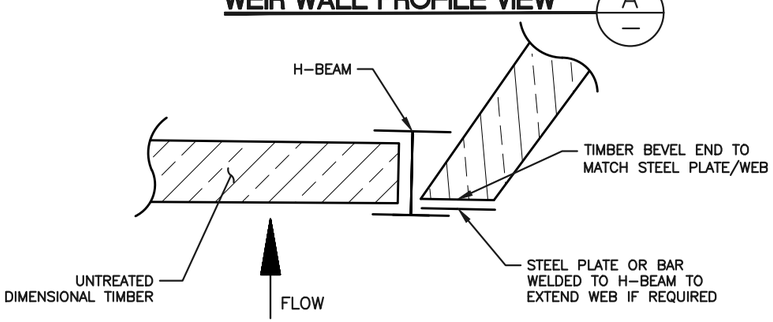

WEIR WALL JOINT DETAIL

NTS

ROUGHENED CHANNEL NOTES:

1. STREAM CHANNEL USES BOX CULVERT'S STREAM GRAVEL GRADATION MIX WHERE Dmax=10".
2. ROUGHENED CHANNEL 3 FT BELOW STREAMBED GRAVEL USE 3-MAN, 2-MAN, 1-MAN AND COBBLES FILL VOIDS W/ STREAM MIX.
3. 1, 2 AND 3 STAND FOR ROCK SIZE (ONE-MAN, TWO-MAN, AND THREE-MAN).
4. ◯ STANDS FOR COBBLES.
5. FINAL ROCK PLACEMENT PER KC ENGINEER DIRECTIONS.

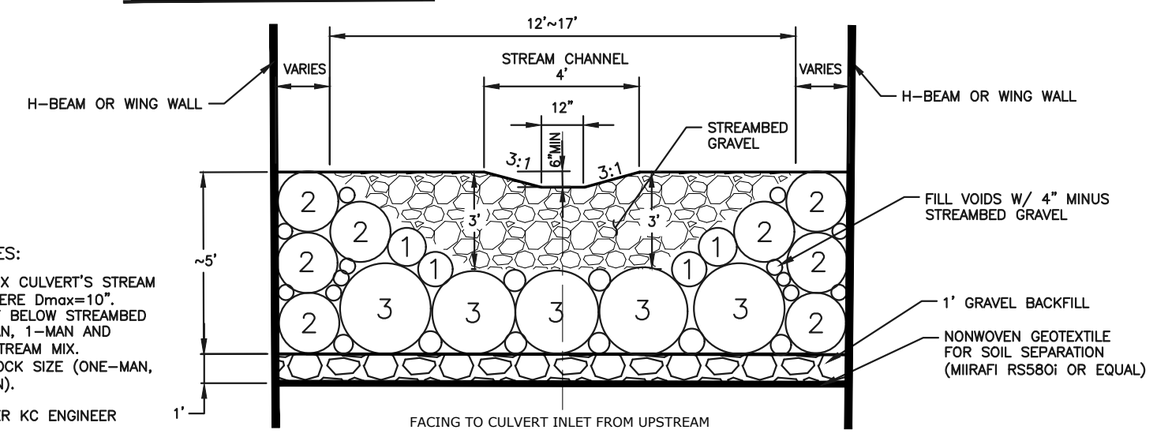

ROUGHENED CHANNEL SCHEMATIC

NTS

SURVEY JOB NO: 14058	05/2017				
CHECKED: T. CRAY	05/2017				
CAD ENTERED: J. WANG	11/2019				
DESIGNED: J. WANG	11/2019				
CHECKED: J. LYOU	11/2019				
SUPERVISOR: J. CASSIDY	11/2019	NUM.	REVISION	BY	DATE

JON A. CASSIDY
STATE OF WASHINGTON
22498
REGISTERED
PROFESSIONAL ENGINEER

FED. AID No. –

PROJECT No. 1130707

MAINTENANCE DIVISION No. 3

TRACKING #

46517(4-2132)

KING COUNTY DEPT. OF LOCAL SERVICES
JOHN TAYLOR, DIRECTOR
162 AVE SE
@ SE 166 CT
CULVERT REPLACEMENT
PROPOSED FISHWAY STRUCTURE DETAILS

King County

SHEET 24 OF 35 SHEETS

320-25(24)